FC4

FC4/V-00

Photo.Fork,PNP-LO/DO,M12 plug,Edge detect

FOUR BEAMS FORK SENSOR FOR BELT TRACKING CONTROL

OVERVIEW

- Four beams photoelectric fork sensor for belt tracking control
- Double static outputs + alarm contact
- Approvals: CE

TECHNICAL FEATURES

Detection properties

Beam angle	± 15°
Sensibility	1 sheet of 80g/m2 white paper
Tilting hysteresis	7mm
Optics diameter	3mm

Outputs

Output type	2 x complementary PNP

Switching frequency	100 hz with 1/1 dark-light
Sampling period	4ms
4 optical scan period	600µs
Response time outputs ONO and ONC	4,7ms
Response time contact output A	8ms (open); 500ms (close)

Electrical data

Operating Voltage	10...30Vdc
No-Load supply current	≤ 70mA
Load current	≤ 300mA
Leakage current	≤ 10µA
Output voltage drop	≤ 2,5V @ Iload = 100mA
Max ripple content	< 5Vpp
Emission	infrared
Interference to external light	10000 lux (artificial light)
Optical power class	1 (no danger)
Maximum capacitance load	300mA
Test input levels (expected, but not connected)	LO ≤ 5V (or open), HI * 15V according to IEC61131-2 (2007)
VDE protection class	III (max. voltage 50VAC), 500V (insulation)

Output A (alarm)	Electromechanical contact, 1A, 30Vdc, no short circuit protection

Mechanical data

Dimensions	26,4 x 83 x 162mm
Housing material	PC
Weight	200g
Connections	2 x pigtail M12
Operating temperature	-20°C … + 55°C
Storage temperature	-40°C … +75°C
Humidity	15% … 95%

Test/Approvals

Approvals	CE
EMC compatibility	Conforming with EMC directive according with EN60947-5-2
Shocks and vibrations	shock resistance according to IEC60068-2-27: 3 axes x 6, half sine, Acc: 30g; Dur: 11s vibration resistance according IEC60068-2-6: freq:10…55hz; Ampl:0,5mm; Sweep:5min; Fr: 3x30min
Degree of protection	IP67

Generical Data

Dimensions	26,4 x 83 x 162mm
Operating Temperature	-20°C … + 55°C
Humidity	15% … 95%

Mechanical Protection	IP67

CONNECTIONS

Eletrical diagram

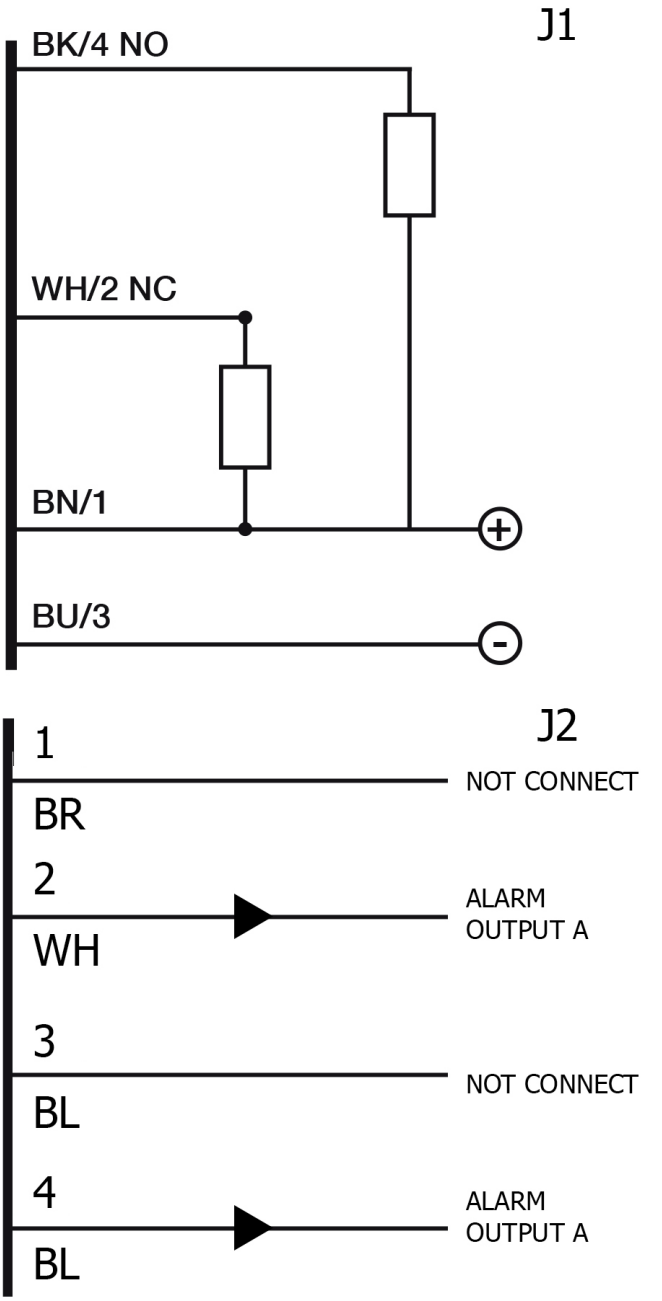

[redacted]

Connector

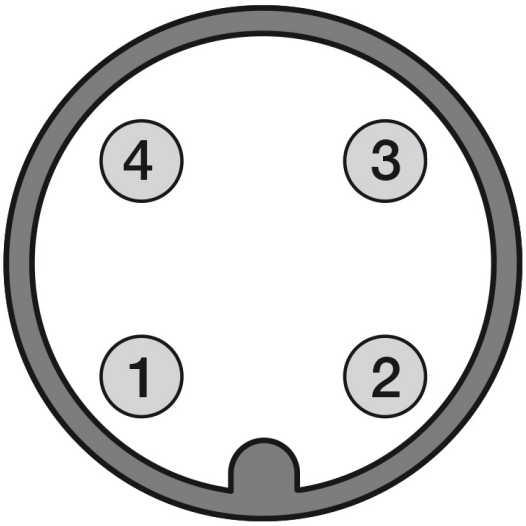

OTHERS

Dimensions

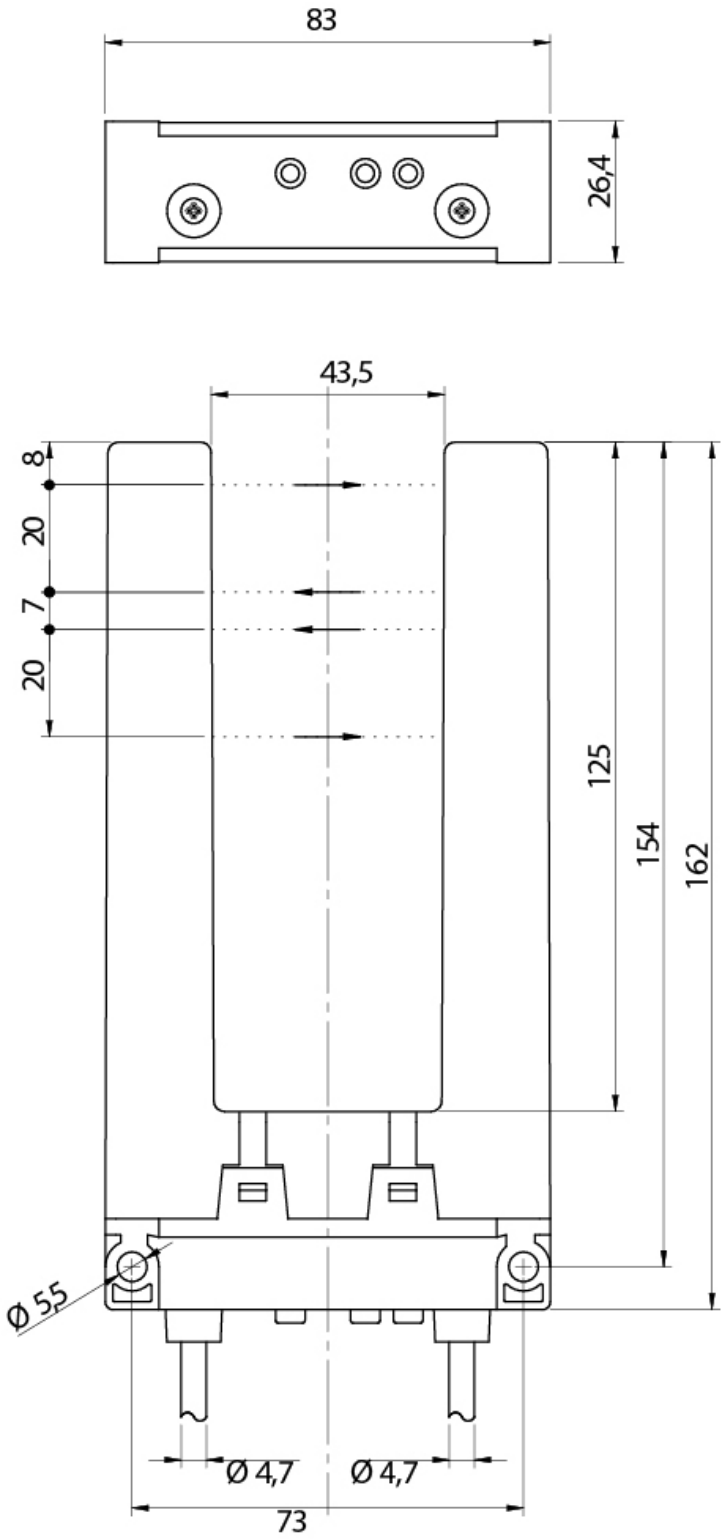

Datasensing S.r.l.
Strada S.Caterina, 235
41122 Modena (MO)
Tel. 059 420411
Fax 059 253973
E-mail
info@datasensing.com

date of printing
25/10/2026
04:02:30