UR+DG

URD/T0

Photo.Maxi,Relay-NO/NC,Ampli 220Vac

CONTROL UNIT FOR MINIATURIZED SENSORS WITH MINIATURE PHOTOELECTRIC SENSORS

OVERVIEW

- The unit allows the mouting of miniature pair of sensors suitable for very harsh environments (DG series)
- LED indicators: alignment (stability), operating voltage, alarm and output state
- Operating voltage AC or DC
- Relay output and relay alarm output
- Double timer with indipendent adjustments
- Sensitivity adjustment
- Possibility of mounting on panel
- IP68 photoelectric sensors for applications in harsh environment
- Sensing distance 60 m (HI), 30 m (LO)
- Approvals: CE

TECHNICAL FEATURES

Outputs	
Switching frequency	10Hz

Electrical data	
Operating Voltage	24Vac
No-Load supply current	1,5 VA

LED indicators	green (supply) red (output state) green (stability) red (alarm)
Frequency	50…60Hz
Max output voltage	250V
Max output current	3A
Timer functions	yes
Operating time (relè de-energized)	≤ 40ms
Reset time (relè energized)	≤ 40ms
Voltage tolerance	+10% … -15%
Operating output	Relay NO+NC
Relay with alarm output	no

Mechanical data

Dimensions	36x90x67mmù
Housing material	Noryl 90 V-0
Weight	110g
Operating temperature	-10°C … +50°C (without freeze)

Test/Approvals

Approvals	CE
EMC compatibility	Conforming with EMC directive according with EN60947-5-2

Degree of protection	IP20

Generical Data

Dimensions	36x90x67mmù
Operating Temperature	-10°C … +50°C (without freeze)
Mechanical Protection	IP20

CONNECTIONS

Eletrical diagram

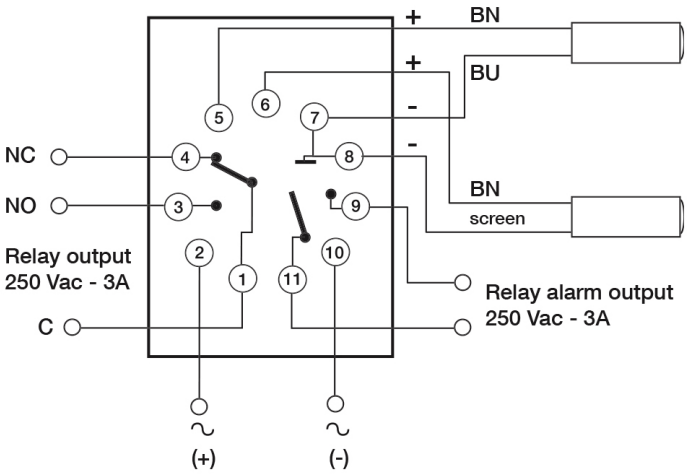

OTHERS

Dimensions

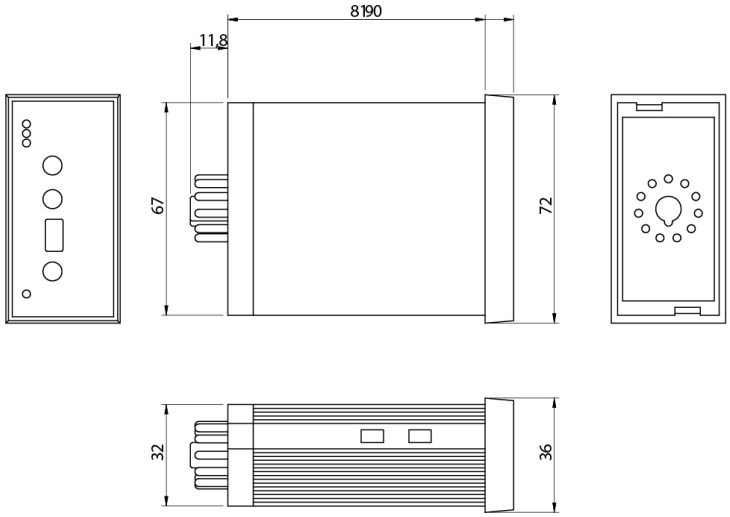

Datasensing S.r.l.
Strada S.Caterina, 235
41122 Modena (MO)
Tel. 059 420411
Fax 059 253973
E-mail
info@datasensing.com

date of printing
25/10/2026
04:02:52