DATASENSING
easing automation challenges

SH4

TYPE 4 SAFETY LIGHT CURTAINS

- Complete type 4 safety light curtains line
- Finger (14 mm), hand (30 mm), or body protection
- Improved performance and features
- Compact profile (35 x 40 mm)
- Wide range scalable in Basic, Standard and Advanced models
- Simultaneous muting and blanking
- Innovative wireless monitoring and configuration system
- Optical two beams synchronization and anti-interference coding
- Basic functions: alignment, automatic restart
- Standard functions: manual restart, EDM
- Standard Muting functions: 2-signals mono and bidirectional muting, override
- Advanced functions: partial muting, dynamic partial muting, 4-signals muting, reduced resolution, multiple fixed or floating blanking zones

CODE DESCRIPTION

SH 4 - 14 - 0300 - SM - 8 - 5

series	SH	Safety light curtain
type	4	Type 4
detection capability	14	Finger: 14 mm
	30	Hand: 30 mm
	2	Body: 2 Beams
	3	Body: 3 Beams
	4	Body: 4 Beams
monitored height	0300	300 mm
	0450	450 mm
	...	
	2250	2250 mm
functionality	B	Basic
	S	Standard
	SM	Standard muting
	A	Advanced
	C	Cascade
receiver main connector	5	5-pin male M12
	8	8-pin male M12
	12	12-pin male M12
		No connector
receiver secondary connector	5	5-pin female M12
		No connector

TECHNICAL FEATURES

	SH4-14-****-*-**-*	SH4-30-****-*-**-*
Protection	finger	hand
Type (EN61496-1)	4	
PL (EN ISO 13849-1)	e	
SIL (IEC 61508)	3	
Protected height	300...2250 mm (with 150 mm steps)	
Detection capability	14 mm	30 mm
Operating range	0.2 ... 10 m	0.2 ... 20 m
Operating distance using muting arms	0.5 ... 7 m	
Operating distance using reflective muting arms	0.5 ... 3 m	
Dead Zone	No dead zone	
Cascade connection	Up to 3 units	
Power supply (Vdc)	24 Vdc ± 20%	
Transmitter consumption	3.5 W max	
Receiver consumption	4.0 W max (without load)	
Safe Outputs	2 OSSD, with short circuit protection	
Auxiliary Outputs	2 PNP, with short circuit protection	
Output current	250 mA max / each output, 500 mA max total outputs	
Capacitive load	1 uF @ 24Vdc max	
Leakage current	< 1 mA	
Response time	from 12 to 30 ms (14 mm res)	from 10 to 19 ms (30 mm res)
Cables length	30 m	
Electrical protection	Class III	
Light source	Infrared LED (850 nm wavelength)	
Effective aperture angle (EAA)	< ± 2.5° at 3 m	
Operating temperature	-30 ...+55 °C	
Storage temperature	-30 ...+60 °C	
Temperature class	T6	
Humidity	15 ... 95 % (no condensation)	
Mechanical protection	IP65, IP 67 (EN 60529)	
Vibrations resistance	10 mm / 3 g, 5 ... 150 Hz frequency (EN 60068-2-6 / Class 3M7 IEC TR 60721-4-3)	
Shock resistance	25 g x 6 ms x 600 (EN 60068-2-27 / Class 3M7 IEC TR 60721-4-3)	
Weight	1.4 Kg/m (single bar, without package)	
Housing Material	Painted aluminium (yellow RAL 1003)	
Caps and covers material	PBT	
Window material	MAKROLON AR 7099 Clear PC	
Functions BASIC models (SH4-*-B-*)	Automatic Restart	
Functions STANDARD models (SH4-*-S-*)	Manual / Automatic Restart, Reset, External Device Monitoring (EDM), Aligment mode	
Functions STANDARD MUTING models (SH4-*-SM-*)	2-signals T Muting / L Muting, Muting dependent Override, Partial muting (half protection height), Muting input filtering and timeout setting, Anti-interference coding	
Functions ADVANCED models (SH4-*-A-*)	4-signals Muting, Dynamic partial muting, Partial Muting (at beams level), Fixed Blanking, External signal fixed blanking teach-in, Floating Blanking, Reduced resolution, Integrated pointer	
Functions CASCADE models (SH4-*-C-*)	Cascade models inherit the same functions of the main unit to which they are connected	
Configuration BASIC models (SH4-*-B-*) and STANDARD models (SH4-*-S-*)	By Wiring	
Configuration STANDARD MUTING models (SH4-*-SM-*)	By DIP-Switches	
Configuration ADVANCED models (SH4-*-A-*)	By DATASENSING SH4 DESIGNER and wi-fi connection	

	SH4-2-****-*-**-*	SH4-3-****-*-**-*	SH4-4-****-*-**-*
Protection	body		
Type (EN61496-1)	4		
PL (EN ISO 13849-1)	e		
SIL (IEC 61508)	3		
Protected height	500 mm	800 mm	900 or 1200 mm
Detection capability	500 mm	400 mm	300 or 400 mm
Operating range	Short range: 0.5 ... 15 m (default value); Long range: 5 ... 70 m (selectable)		
Operating distance using muting arms	0.5 ... 7 m		
Operating distance using reflective muting arms	0.5 ... 3 m		
Dead Zone	130 mm Distance from bottom to first beam		
Cascade connection	Not possible		
Power supply (Vdc)	24 Vdc ± 20%		
Transmitter consumption	3.5 W max		
Receiver consumption	4.0 W max (without load)		
Safe Outputs	2 OSSD, with short circuit protection		
Auxiliary Outputs	2 PNP, with short circuit protection		
Output current	250 mA max / each output, 500 mA max total outputs		
Capacitive load	1 uF @ 24Vdc max		
Leakage current	< 1 mA		
Response time	from 12 to 15 ms		
Cables length	30 m receiver; 50 m transmitter		
Electrical protection	Class III		
Light source	Infrared LED (850 nm wavelength)		
Effective aperture angle (EAA)	< ± 2.5° at 3 m		
Operating temperature	-30 ...+55 °C		
Storage temperature	-30 ...+60 °C		
Temperature class	T6		
Humidity	15 ... 95 % (no condensation)		
Mechanical protection	IP65, IP 67 (EN 60529)		
Vibrations resistance	10 mm / 3 g, 5 ... 150 Hz frequency (EN 60068-2-6 / Class 3M7 IEC TR 60721-4-3)		
Shock resistance	25 g x 6 ms x 600 (EN 60068-2-27 / Class 3M7 IEC TR 60721-4-3)		
Weight	1.4 Kg/m (single bar, without package)		
Housing Material	Painted aluminium (yellow RAL 1003)		
Caps and covers material	PBT		
Window material	MAKROLON AR 7099 Clear PC		
Functions BASIC models (SH4-*-B-*)	Automatic Restart		
Functions STANDARD models (SH4-*-S-*)	Manual / Automatic Restart, Reset, External Device Monitoring (EDM), Aligment mode		
Functions STANDARD MUTING models (SH4-*-SM-*)	2-signals T Muting / L Muting, Muting dependent Override, Partial muting (half protection height), Muting input filtering and timeout setting, Anti-interference coding		
Functions ADVANCED models (SH4-*-A-*)	4-signals Muting, Dynamic partial muting, Partial Muting (at beams level), integrated pointer		
Functions CASCADE models (SH4-*-C-*)	Cascade models inherit the same functions of the main unit to which they are connected		
Configuration BASIC models (SH4-*-B-*) and STANDARD models (SH4-*-S-*)	By Wiring		
Configuration STANDARD MUTING models (SH4-*-SM-*)	By DIP-Switches		
Configuration ADVANCED models (SH4-*-A-*)	By DATASENSING SH4 DESIGNER and wi-fi connection		

AVAILABLE MODELS

Capability	Range	Functio-nality	Receiver connector	Protected height (mm)	beams	Response time (ms) with Anti-Interference code disabled	Response time (ms) with Anti-Interference code enabled	Model
14 mm	0.2 ... 10 m	basic	5 poles	300	30	9	14	**SH4-14-0300-B-5** (957920001)
				450	45	10	18	**SH4-14-0450-B-5** (957920002)
				600	60	12	22	**SH4-14-0600-B-5** (957920003)
				750	75	13	26	**SH4-14-0750-B-5** (957920004)
				900	90	15	30	**SH4-14-0900-B-5** (957920005)
				1050	105	16	33	**SH4-14-1050-B-5** (957920006)
				1200	120	18	37	**SH4-14-1200-B-5** (957920007)
				1350	135	20	41	**SH4-14-1350-B-5** (957920008)
				1500	150	21	45	**SH4-14-1500-B-5** (957920009)
				1650	165	23	49	**SH4-14-1650-B-5** (957920010)
				1800	180	24	52	**SH4-14-1800-B-5** (957920011)
				1950	195	26	56	**SH4-14-1950-B-5** (957920012)
				2100	210	27	60	**SH4-14-2100-B-5** (957920013)
				2250	225	29	64	**SH4-14-2250-B-5** (957920014)
14 mm	0.2 ... 10 m	standard	8 poles	300	30	9	14	**SH4-14-0300-S-8** (957920015)
				450	45	10	18	**SH4-14-0450-S-8** (957920016)
				600	60	12	22	**SH4-14-0600-S-8** (957920017)
				750	75	13	26	**SH4-14-0750-S-8** (957920018)
				900	90	15	30	**SH4-14-0900-S-8** (957920019)
				1050	105	16	33	**SH4-14-1050-S-8** (957920020)
				1200	120	18	37	**SH4-14-1200-S-8** (957920021)
				1350	135	20	41	**SH4-14-1350-S-8** (957920022)
				1500	150	21	45	**SH4-14-1500-S-8** (957920023)
				1650	165	23	49	**SH4-14-1650-S-8** (957920024)
				1800	180	24	52	**SH4-14-1800-S-8** (957920025)
				1950	195	26	56	**SH4-14-1950-S-8** (957920026)
				2100	210	27	60	**SH4-14-2100-S-8** (957920027)
				2250	225	29	64	**SH4-14-2250-S-8** (957920028)

For units in cascade, the overall response time is given by this formula. 2 units: (sum of units response time + 1 ms); 3 units: (sum of units response time - 1 ms)

Capability	Range	Functio-nality	Receiver connector	Protected height (mm)	beams	Response time (ms) with Anti-Interference code disabled	Response time (ms) with Anti-Interference code enabled	Model
14 mm	0.2 ... 10 m	standard muting	8 poles	300	30	9	14	**SH4-14-0300-SM-8** (957920043)
				450	45	10	18	**SH4-14-0450-SM-8** (957920044)
				600	60	12	22	**SH4-14-0600-SM-8** (957920045)
				750	75	13	26	**SH4-14-0750-SM-8** (957920046)
				900	90	15	30	**SH4-14-0900-SM-8** (957920047)
				1050	105	16	33	**SH4-14-1050-SM-8** (957920048)
				1200	120	18	37	**SH4-14-1200-SM-8** (957920049)
				1350	135	20	41	**SH4-14-1350-SM-8** (957920050)
				1500	150	21	45	**SH4-14-1500-SM-8** (957920051)
				1650	165	23	49	**SH4-14-1650-SM-8** (957920052)
				1800	180	24	52	**SH4-14-1800-SM-8** (957920053)
				1950	195	26	56	**SH4-14-1950-SM-8** (957920054)
				2100	210	27	60	**SH4-14-2100-SM-8** (957920055)
				2250	225	29	64	**SH4-14-2250-SM-8** (957920056)
14 mm	0.2 ... 10 m	standard muting	8 and 5 poles	300	30	9	14	**SH4-14-0300-SM-8-5** (957920565)
				450	45	10	18	**SH4-14-0450-SM-8-5** (957920566)
				600	60	12	22	**SH4-14-0600-SM-8-5** (957920567)
				750	75	13	26	**SH4-14-0750-SM-8-5** (957920568)
				900	90	15	30	**SH4-14-0900-SM-8-5** (957920569)
				1050	105	16	33	**SH4-14-1050-SM-8-5** (957920570)
				1200	120	18	37	**SH4-14-1200-SM-8-5** (957920571)
				1350	135	20	41	**SH4-14-1350-SM-8-5** (957920572)
				1500	150	21	45	**SH4-14-1500-SM-8-5** (957920573)
				1650	165	23	49	**SH4-14-1650-SM-8-5** (957920574)
				1800	180	24	52	**SH4-14-1800-SM-8-5** (957920575)
				1950	195	26	56	**SH4-14-1950-SM-8-5** (957920576)
				2100	210	27	60	**SH4-14-2100-SM-8-5** (957920577)
				2250	225	29	64	**SH4-14-2250-SM-8-5** (957920578)

For units in cascade, the overall response time is given by this formula. 2 units: (sum of units response time + 1 ms); 3 units: (sum of units response time - 1 ms)

Capability	Range	Functio-nality	Receiver connector	Protected height (mm)	beams	Response time (ms) with Anti-Interference code disabled	Response time (ms) with Anti-Interference code enabled	Model
14 mm	0.2 ... 10 m	advanced	12 poles	300	30	9	14	**SH4-14-0300-A-12** (957920147)
				450	45	10	18	**SH4-14-0450-A-12** (957920148)
				600	60	12	22	**SH4-14-0600-A-12** (957920149)
				750	75	13	26	**SH4-14-0750-A-12** (957920150)
				900	90	15	30	**SH4-14-0900-A-12** (957920151)
				1050	105	16	33	**SH4-14-1050-A-12** (957920152)
				1200	120	18	37	**SH4-14-1200-A-12** (957920153)
				1350	135	20	41	**SH4-14-1350-A-12** (957920154)
				1500	150	21	45	**SH4-14-1500-A-12** (957920155)
				1650	165	23	49	**SH4-14-1650-A-12** (957920156)
				1800	180	24	52	**SH4-14-1800-A-12** (957920157)
				1950	195	26	56	**SH4-14-1950-A-12** (957920158)
				2100	210	27	60	**SH4-14-2100-A-12** (957920159)
				2250	225	29	64	**SH4-14-2250-A-12** (957920160)
14 mm	0.2 ... 10 m	advanced	12 and 5 poles	300	30	9	14	**SH4-14-0300-A-12-5** (957920161)
				450	45	10	18	**SH4-14-0450-A-12-5** (957920162)
				600	60	12	22	**SH4-14-0600-A-12-5** (957920163)
				750	75	13	26	**SH4-14-0750-A-12-5** (957920164)
				900	90	15	30	**SH4-14-0900-A-12-5** (957920165)
				1050	105	16	33	**SH4-14-1050-A-12-5** (957920166)
				1200	120	18	37	**SH4-14-1200-A-12-5** (957920167)
				1350	135	20	41	**SH4-14-1350-A-12-5** (957920168)
				1500	150	21	45	**SH4-14-1500-A-12-5** (957920169)
				1650	165	23	49	**SH4-14-1650-A-12-5** (957920170)
				1800	180	24	52	**SH4-14-1800-A-12-5** (957920171)
				1950	195	26	56	**SH4-14-1950-A-12-5** (957920172)
				2100	210	27	60	**SH4-14-2100-A-12-5** (957920173)
				2250	225	29	64	**SH4-14-2250-A-12-5** (957920174)

For units in cascade, the overall response time is given by this formula. 2 units: (sum of units response time + 1 ms); 3 units: (sum of units response time - 1 ms)

Capability	Range	Functio-nality	Receiver connector	Protected height (mm)	beams	Response time (ms) with Anti-Interference code disabled	Response time (ms) with Anti-Interference code enabled	Model
14 mm	0.2 ... 10 m	cascade	5 and 5 poles	300	30	9	14	**SH4-14-0300-C-5-5** (957920029)
				450	45	10	18	**SH4-14-0450-C-5-5** (957920030)
				600	60	12	22	**SH4-14-0600-C-5-5** (957920031)
				750	75	13	26	**SH4-14-0750-C-5-5** (957920032)
				900	90	15	30	**SH4-14-0900-C-5-5** (957920033)
				1050	105	16	33	**SH4-14-1050-C-5-5** (957920034)
				1200	120	18	37	**SH4-14-1200-C-5-5** (957920035)
				1350	135	20	41	**SH4-14-1350-C-5-5** (957920036)
				1500	150	21	45	**SH4-14-1500-C-5-5** (957920037)
				1650	165	23	49	**SH4-14-1650-C-5-5** (957920038)
				1800	180	24	52	**SH4-14-1800-C-5-5** (957920039)
				1950	195	26	56	**SH4-14-1950-C-5-5** (957920040)
				2100	210	27	60	**SH4-14-2100-C-5-5** (957920041)
				2250	225	29	64	**SH4-14-2250-C-5-5** (957920042)
30 mm	0.2 ... 20 m	basic	5 poles	300	12	7	10	**SH4-30-0300-B-5** (957920057)
				450	18	8	12	**SH4-30-0450-B-5** (957920058)
				600	24	9	13	**SH4-30-0600-B-5** (957920059)
				750	30	9	15	**SH4-30-0750-B-5** (957920060)
				900	36	10	17	**SH4-30-0900-B-5** (957920061)
				1050	42	11	18	**SH4-30-1050-B-5** (957920062)
				1200	48	12	20	**SH4-30-1200-B-5** (957920063)
				1350	54	12	22	**SH4-30-1350-B-5** (957920064)
				1500	60	13	23	**SH4-30-1500-B-5** (957920065)
				1650	66	14	25	**SH4-30-1650-B-5** (957920066)
				1800	72	14	27	**SH4-30-1800-B-5** (957920067)
				1950	78	15	28	**SH4-30-1950-B-5** (957920068)
				2100	84	16	30	**SH4-30-2100-B-5** (957920069)
				2250	90	17	32	**SH4-30-2250-B-5** (957920070)

For units in cascade, the overall response time is given by this formula. 2 units: (sum of units response time + 1 ms); 3 units: (sum of units response time - 1 ms)

Capability	Range	Functio-nality	Receiver connector	Protected height (mm)	beams	Response time (ms) with Anti-Interference code disabled	Response time (ms) with Anti-Interference code enabled	Model
30 mm	0.2 ... 20 m	standard	8 poles	300	12	7	10	**SH4-30-0300-S-8** (957920071)
				450	18	8	12	**SH4-30-0450-S-8** (957920072)
				600	24	9	13	**SH4-30-0600-S-8** (957920073)
				750	30	9	15	**SH4-30-0750-S-8** (957920074)
				900	36	10	17	**SH4-30-0900-S-8** (957920075)
				1050	42	11	18	**SH4-30-1050-S-8** (957920076)
				1200	48	12	20	**SH4-30-1200-S-8** (957920077)
				1350	54	12	22	**SH4-30-1350-S-8** (957920078)
				1500	60	13	23	**SH4-30-1500-S-8** (957920079)
				1650	66	14	25	**SH4-30-1650-S-8** (957920080)
				1800	72	14	27	**SH4-30-1800-S-8** (957920081)
				1950	78	15	28	**SH4-30-1950-S-8** (957920082)
				2100	84	16	30	**SH4-30-2100-S-8** (957920083)
				2250	90	17	32	**SH4-30-2250-S-8** (957920084)
30 mm	0.2 ... 20 m	standard muting	8 poles	300	12	7	10	**SH4-30-0300-SM-8** (957920099)
				450	18	8	12	**SH4-30-0450-SM-8** (957920100)
				600	24	9	13	**SH4-30-0600-SM-8** (957920101)
				750	30	9	15	**SH4-30-0750-SM-8** (957920102)
				900	36	10	17	**SH4-30-0900-SM-8** (957920103)
				1050	42	11	18	**SH4-30-1050-SM-8** (957920104)
				1200	48	12	20	**SH4-30-1200-SM-8** (957920105)
				1350	54	12	22	**SH4-30-1350-SM-8** (957920106)
				1500	60	13	23	**SH4-30-1500-SM-8** (957920107)
				1650	66	14	25	**SH4-30-1650-SM-8** (957920108)
				1800	72	14	27	**SH4-30-1800-SM-8** (957920109)
				1950	78	15	28	**SH4-30-1950-SM-8** (957920110)
				2100	84	16	30	**SH4-30-2100-SM-8** (957920111)
				2250	90	17	32	**SH4-30-2250-SM-8** (957920112)

For units in cascade, the overall response time is given by this formula. 2 units: (sum of units response time + 1 ms); 3 units: (sum of units response time - 1 ms)

Capability	Range	Functio-nality	Receiver connector	Protected height (mm)	beams	Response time (ms) with Anti-Interference code disabled	Response time (ms) with Anti-Interference code enabled	Model
30 mm	0.2 ... 20 m	standard muting	8 and 5 poles	300	12	7	10	**SH4-30-0300-SM-8-5** (957920085)
				450	18	8	12	**SH4-30-0450-SM-8-5** (957920086)
				600	24	9	13	**SH4-30-0600-SM-8-5** (957920087)
				750	30	9	15	**SH4-30-0750-SM-8-5** (957920088)
				900	36	10	17	**SH4-30-0900-SM-8-5** (957920089)
				1050	42	11	18	**SH4-30-1050-SM-8-5** (957920090)
				1200	48	12	20	**SH4-30-1200-SM-8-5** (957920091)
				1350	54	12	22	**SH4-30-1350-SM-8-5** (957920092)
				1500	60	13	23	**SH4-30-1500-SM-8-5** (957920093)
				1650	66	14	25	**SH4-30-1650-SM-8-5** (957920094)
				1800	72	14	27	**SH4-30-1800-SM-8-5** (957920095)
				1950	78	15	28	**SH4-30-1950-SM-8-5** (957920096)
				2100	84	16	30	**SH4-30-2100-SM-8-5** (957920097)
				2250	90	17	32	**SH4-30-2250-SM-8-5** (957920098)
30 mm	0.2 ... 20 m	advanced	12 poles	300	12	7	10	**SH4-30-0300-A-12** (957920189)
				450	18	8	12	**SH4-30-0450-A-12** (957920190)
				600	24	9	13	**SH4-30-0600-A-12** (957920191)
				750	30	9	15	**SH4-30-0750-A-12** (957920192)
				900	36	10	17	**SH4-30-0900-A-12** (957920193)
				1050	42	11	18	**SH4-30-1050-A-12** (957920194)
				1200	48	12	20	**SH4-30-1200-A-12** (957920195)
				1350	54	12	22	**SH4-30-1350-A-12** (957920196)
				1500	60	13	23	**SH4-30-1500-A-12** (957920197)
				1650	66	14	25	**SH4-30-1650-A-12** (957920198)
				1800	72	14	27	**SH4-30-1800-A-12** (957920199)
				1950	78	15	28	**SH4-30-1950-A-12** (957920200)
				2100	84	16	30	**SH4-30-2100-A-12** (957920201)
				2250	90	17	32	**SH4-30-2250-A-12** (957920202)

For units in cascade, the overall response time is given by this formula. 2 units: (sum of units response time + 1 ms); 3 units: (sum of units response time - 1 ms)

Capability	Range	Functio-nality	Receiver connector	Protected height (mm)	beams	Response time (ms) with Anti-Interference code disabled	Response time (ms) with Anti-Interference code enabled	Model
30 mm	0.2 ... 20 m	advanced	5 and 12 poles	300	12	7	10	**SH4-30-0300-A-12-5** (957920203)
				450	18	8	12	**SH4-30-0450-A-12-5** (957920204)
				600	24	9	13	**SH4-30-0600-A-12-5** (957920205)
				750	30	9	15	**SH4-30-0750-A-12-5** (957920206)
				900	36	10	17	**SH4-30-0900-A-12-5** (957920207)
				1050	42	11	18	**SH4-30-1050-A-12-5** (957920208)
				1200	48	12	20	**SH4-30-1200-A-12-5** (957920209)
				1350	54	12	22	**SH4-30-1350-A-12-5** (957920210)
				1500	60	13	23	**SH4-30-1500-A-12-5** (957920211)
				1650	66	14	25	**SH4-30-1650-A-12-5** (957920212)
				1800	72	14	27	**SH4-30-1800-A-12-5** (957920213)
				1950	78	15	28	**SH4-30-1950-A-12-5** (957920214)
				2100	84	16	30	**SH4-30-2100-A-12-5** (957920215)
				2250	90	17	32	**SH4-30-2250-A-12-5** (957920216)
30 mm	0.2 ... 20 m	cascade	5 and 5 poles	300	12	7	10	**SH4-30-0300-C-5-5** (957920113)
				450	18	8	12	**SH4-30-0450-C-5-5** (957920114)
				600	24	9	13	**SH4-30-0600-C-5-5** (957920115)
				750	30	9	15	**SH4-30-0750-C-5-5** (957920116)
				900	36	10	17	**SH4-30-0900-C-5-5** (957920117)
				1050	42	11	18	**SH4-30-1050-C-5-5** (957920118)
				1200	48	12	20	**SH4-30-1200-C-5-5** (957920119)
				1350	54	12	22	**SH4-30-1350-C-5-5** (957920120)
				1500	60	13	23	**SH4-30-1500-C-5-5** (957920121)
				1650	66	14	25	**SH4-30-1650-C-5-5** (957920122)
				1800	72	14	27	**SH4-30-1800-C-5-5** (957920123)
				1950	78	15	28	**SH4-30-1950-C-5-5** (957920124)
				2100	84	16	30	**SH4-30-2100-C-5-5** (957920125)
				2250	90	17	32	**SH4-30-2250-C-5-5** (957920126)

For units in cascade, the overall response time is given by this formula. 2 units: (sum of units response time + 1 ms); 3 units: (sum of units response time - 1 ms)

Capability	Range	Functio-nality	Receiver connector	Protected height (mm)	beams	Response time (ms) with Anti-Interference code disabled	Response time (ms) with Anti-Interference code enabled	Model
body detection	0.5 ... 70 m	basic	5 poles	500	2	12	23	**SH4-2-0500-B-5** (957920127)
				800	3	15	27	**SH4-3-0800-B-5** (957920128)
				900	4	15	29	**SH4-4-0900-B-5** (957920129)
				1200	4	15	29	**SH4-4-1200-B-5** (957920130)
		standard	8 poles	500	2	12	23	**SH4-2-0500-S-8** (957920131)
				800	3	15	27	**SH4-3-0800-S-8** (957920132)
				900	4	15	29	**SH4-4-0900-S-8** (957920133)
				1200	4	15	29	**SH4-4-1200-S-8** (957920134)
		standard muting	8 poles	500	2	12	23	**SH4-2-0500-SM-8** (957920139)
				800	3	15	27	**SH4-3-0800-SM-8** (957920140)
				900	4	15	29	**SH4-4-0900-SM-8** (957920141)
				1200	4	15	29	**SH4-4-1200-SM-8** (957920142)
		standard muting	8 and 5 poles	500	2	12	23	**SH4-2-0500-SM-8-5** (957920135)
				800	3	15	27	**SH4-3-0800-SM-8-5** (957920136)
				900	4	15	29	**SH4-4-0900-SM-8-5** (957920137)
				1200	4	15	29	**SH4-4-1200-SM-8-5** (957920138)
		advanced	12 and 5 poles	500	2	12	23	**SH4-2-0500-A-12-5** (957920231)
				800	3	15	27	**SH4-3-0800-A-12-5** (957920232)
				900	4	15	29	**SH4-4-0900-A-12-5** (957920233)
				1200	4	15	29	**SH4-4-1200-A-12-5** (957920234)

For units in cascade, the overall response time is given by this formula. 2 units: (sum of units response time + 1 ms); 3 units: (sum of units response time - 1 ms)

CONNECTION DIAGRAMS (RECEIVER MAIN CONNECTOR)

SH4 BASE (SH4-**-****-B-xx-5): M12 male 5-poles

1	BROWN	24 Vdc	POWER
2	WHITE	0 Vdc	SAFE OUTPUT
3	BLUE	COM	POWER
4	BLACK	OSSD2	SAFE OUTPUT
5	GREY	COM	COM

SH4 STANDARD (SH4-**-****-S-8): M12 male 8-poles

1	WHITE	RESTART/ RESET	INPUT
2	BROWN	24Vdc	POWER
3	GREEN	EDM / SE-LECTION	INPUT
4	YELLOW	EDM	INPUT
5	GREY	OSSD1	SAFE OUTPUT
6	PINK	OSSD2	SAFE OUTPUT
7	BLUE	0 Vdc	POWER
8	RED	MAN/AUTO SELECTION	INPUT

SH4 STANDARD MUTING (SH4-**-****-SM-8): M12 male 8-poles

1	WHITE	RESTART/ RESET/EDM/ OVERRIDE	INPUT
2	BROWN	24Vdc	POWER
3	GREEN	MUTING1	INPUT
4	YELLOW	MUTING2	INPUT
5	GREY	OSSD1	SAFE OUTPUT
6	PINK	OSSD2	SAFE OUTPUT
7	BLUE	0 Vdc	POWER
8	RED	MUTING LAMP	OUTPUT

SH4 STANDARD MUTING (SH4-**-****-S-8-5): M12 male 8-poles

1	WHITE	RESTART/ RESET	INPUT
2	BROWN	24Vdc	POWER
3	GREEN	EDM / SE-LECTION	INPUT
4	YELLOW	EDM	INPUT
5	GREY	OSSD1	SAFE OUTPUT
6	PINK	OSSD2	SAFE OUTPUT
7	BLUE	0 Vdc	POWER
8	RED	OVVER-RIDE 2	INPUT

SH4 ADVANCED (SH4-**-****-A-12): M12 male 12-poles

1	BROWN	24 Vdc	POWER
2	BLUE	0 Vdc	POWER
3	WHITE	CONFIG-URABLE INPUT	INPUT
4	GREEN	CONFIG-URABLE INPUT	INPUT
5	PINK	OSSD2	SAFE OUTPUT
6	YELLOW	CONFIG-URABLE INPUT	INPUT
7	BLACK	CONFIGU-RABLE INPUT/ OUTPUT	INPUT/ OUTPUT
8	GREY	OSSD1	SAFE OUTPUT
9	RED	CONFIG-URABLE INPUT	INPUT
10	VIOLET	CONFIG-URABLE INPUT/ OUTPUT	INPUT/ OUTPUT
11	GREY/PINK	OVER-RIDE 2	OUTPUT
12	RED/BLUE	CONFIG-URABLE INPUT	INPUT

SH4 ADVANCED (SH4-**-****-A-12-5): M12 male 12-poles

1	BROWN	24 Vdc	POWER
2	BLUE	0 Vdc	POWER
3	WHITE	CONFIG-URABLE INPUT	INPUT
4	GREEN	CONFIG-URABLE INPUT	INPUT
5	PINK	OSSD2	SAFE OUTPUT
6	YELLOW	CONFIG-URABLE INPUT	INPUT
7	BLACK	CONFIG-URABLE INPUT	INPUT
8	GREY	OSSD1	SAFE OUTPUT
9	RED	OVER-RIDE 2	INPUT
10	VIOLET	CONFIG-URABLE INPUT/ OUTPUT	INPUT/ OUTPUT
11	GREY/PINK	CONFIG-URABLE INPUT/ OUTPUT	INPUT/ OUTPUT
12	RED/BLUE	N/A	

NOTES:
Inputs and Outputs of SH4 ADVANCED can be reconfigured with DATASENSING SH4 DESIGNER APP between the following:

INPUTS

- Reset
- Restart
- Align
- EDM
- Muting1
- Muting2
- Muting3
- Muting4
- Muting Enable
- Override1
- Teach in
- Beam Tolerance

OUTPUTS

- Lamp
- Override status

CONNECTION DIAGRAMS (RECEIVER SECONDARY CONNECTOR)

SH4 STANDARD MUTING (SH4--****-S-8-5): M12 female 5-poles**
SH4 ADVANCED MUTING (SH4--****-S-12-5): M12 female 5-poles**

1	BROWN	24 Vdc OUT	POWER OUTPUT
2	WHITE	MUTING2	SAFE OUTPUT
3	BLUE	0 Vdc OUT	POWER OUTPUT
4	BLACK	MUTING1	SAFE OUTPUT
5	GREY	COM	COM

CONNECTION DIAGRAMS (TRANSMITTER MAIN CONNECTOR)

SH4 BASE (SH4--****-B-**-5): M12 male 5-poles**

1	BROWN	24 Vdc	POWER
2	WHITE	N/A	
3	BLUE	0 Vdc	POWER
4	BLACK	N/A	
5	GREY	N/A	

SH4 STANDARD (SH4--****-S-8): M12 male 5-poles**
SH4 STANDARD MUTING (SH4--****-SM-*): M12 male 5-poles**

1	BROWN	24 Vdc	POWER
2	WHITE	TEST	INPUT
3	BLUE	0 Vdc	POWER
4	BLACK	CODE	INPUT
5	GREY	N/A	

SH4 ADVANCED (SH4--****-A-*): M12 male 5-poles**

1	BROWN	24 Vdc	POWER
2	WHITE	TEST/ POINTER	INPUT
3	BLUE	24 Vdc	POWER
4	BLACK	CODE	INPUT
5	GREY	COM	COM

CONNECTION DIAGRAMS (TRANSMITTER SECONDARY CONNECTOR)

SH4 STANDARD MUTING (SH4--****-SM-8-5): M12 female 5-poles**

1	BROWN	24 Vdc	POWER
2	WHITE	TEST	INPUT
3	BLUE	0 Vdc	POWER
4	BLACK	CODE	INPUT
5	GREY	COM	COM

SH4 ADVANCED (SH4--****-A-8-5): M12 female 5-poles**

1	BROWN	24 Vdc	POWER
2	WHITE	TEST/ POINTER	INPUT
3	BLUE	0 Vdc	POWER
4	BLACK	CODE	INPUT
5	GREY	COM	COM

NOTE: PIN2 on transmitter main connector of body resolution models (SH4-2/3/4-*-*-*) can be used for selection of short or long range.

DIMENSIONS (FINGER)

SH4-14-*-**-*-***

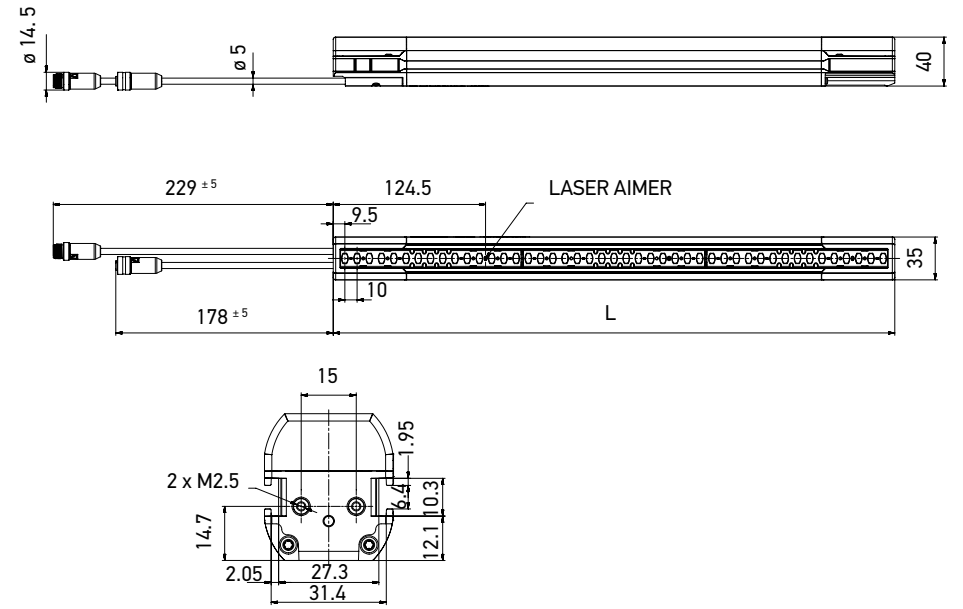

(mm)

Model	L (mm)
SH4-14-0300-**-*-*	309
SH4-14-0450-**-*-*	459
SH4-14-0600-**-*-*	609
SH4-14-0750-**-*-*	759
SH4-14-0900-**-*-*	909
SH4-14-1050-**-*-*	1059
SH4-14-1200-**-*-*	1209
SH4-14-1300-**-*-*	1359
SH4-14-1500-**-*-*	1509
SH4-14-1650-**-*-*	1659
SH4-14-1800-**-*-*	1809
SH4-14-1950-**-*-*	1959
SH4-14-2100-**-*-*	2109
SH4-14-2250-**-*-*	2259
SH4-14-2400-**-*-*	2409
SH4-14-2550-**-*-*	2559
SH4-14-2700-**-*-*	2709
SH4-14-2850-**-*-*	2859
SH4-14-3000-**-*-*	3009

DIMENSIONS (HAND)

SH30-30-*-**-*-***

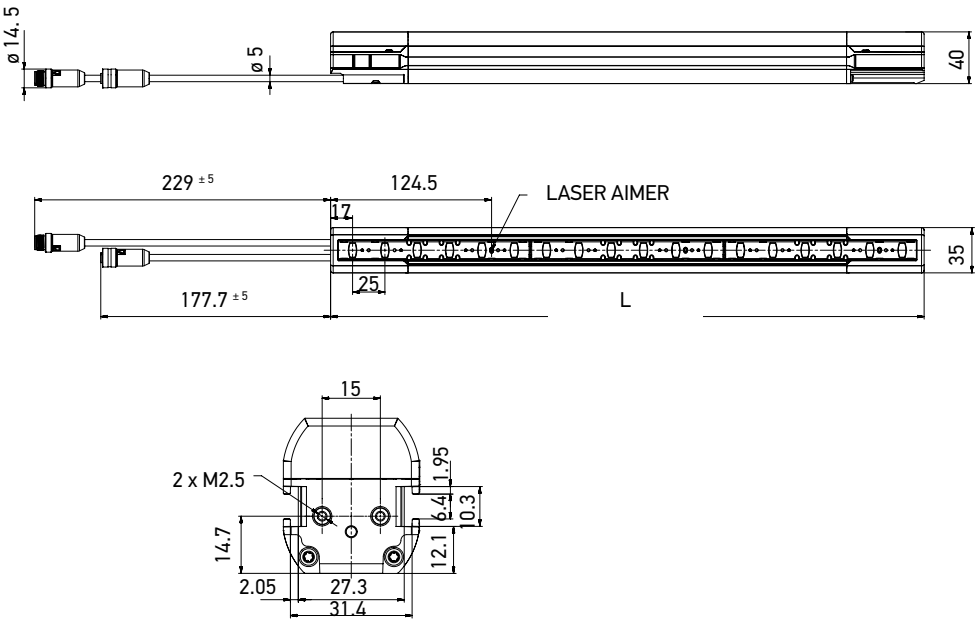

(mm)

Model	L (mm)
SH4-30-0300-**-*-*	309
SH4-30-0450-**-*-*	459
SH4-30-0600-**-*-*	609
SH4-30-0750-**-*-*	759
SH4-30-0900-**-*-*	909
SH4-30-1050-**-*-*	1059
SH4-30-1200-**-*-*	1209
SH4-30-1300-**-*-*	1359
SH4-30-1500-**-*-*	1509
SH4-30-1650-**-*-*	1659
SH4-30-1800-**-*-*	1809
SH4-30-1950-**-*-*	1959
SH4-30-2100-**-*-*	2109
SH4-30-2250-**-*-*	2259
SH4-30-2400-**-*-*	2409
SH4-30-2550-**-*-*	2559
SH4-30-2700-**-*-*	2709
SH4-30-2850-**-*-*	2859
SH4-30-3000-**-*-*	3009

DIMENSIONS (BODY)

SH4-4-1200-**-*-*

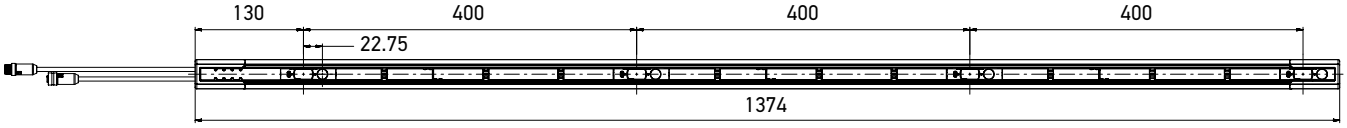

(mm)

SH4-4-0900-**-*-*

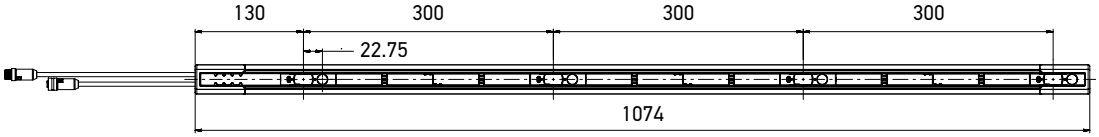

(mm)

SH4-3-0800-**-*-*

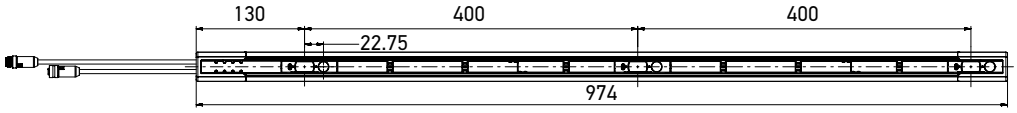

(mm)

SH4-2-0500-**-*-*

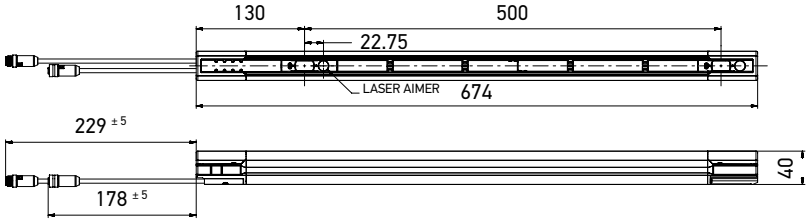

(mm)

SH4-*-****-**-*-*

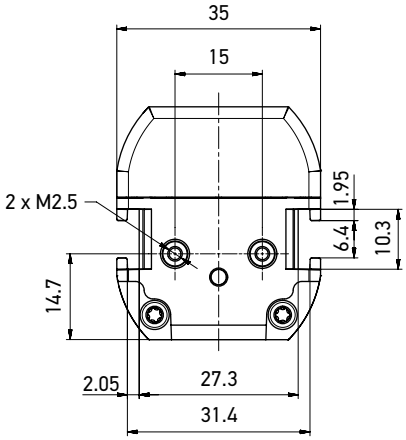

(mm)

ACCESSORIES: BRACKETS

ST-K4ROT-SH

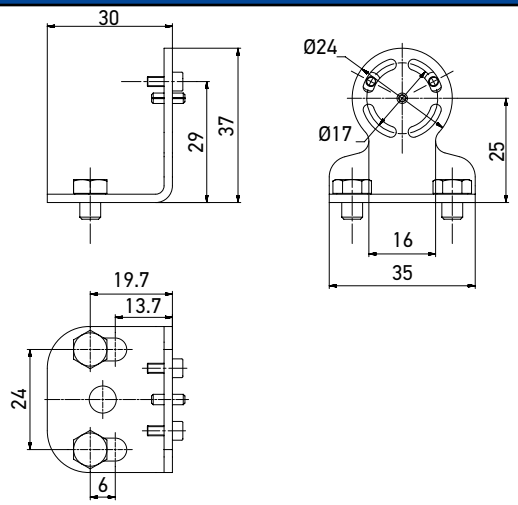

(mm)

Model	Order nr.	Compatibility
Metal top-bottom rotating fixing brackes kit (4 brackets) for SH4	95ASE0042	SH4

ST-KSTD

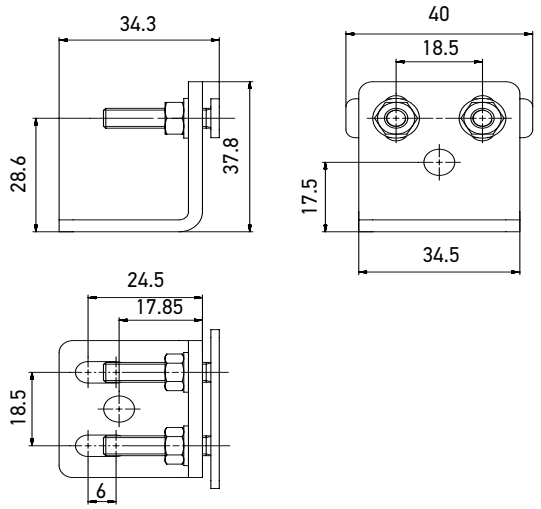

(mm)

Model	Order nr.	Compatibility	Notes
Metal angled fixing brackes kit (4 brackets) for SH4	95ACC1670	SH4, SG2/SG4, SG BODY COMPACT, SG BODY BIG	The angled fixing bracket is included in the package of SH4 but it can be ordered separately for substitutions

ACCESSORIES: TRANSMITTER AND RECEIVER CABLES

SH4 BASE (SH4-**-***-B-**-*)		
Receiver main connector	Length (m)	Order code
CS-A1-03-U-03	3	95ASE1170
CS-A1-03-U-05	5	95ASE1180
CS-A1-03-U-10	10	95ASE1190
CS-A1-03-U-15	15	95ASE1200
CS-A1-03-U-25	25	95ASE1210
CS-A1-03-U-50	50	95A252700
SH4 STANDARD (SH4--***-S/SM-**-*)**		
Receiver main connector	Length (m)	Order code
CS-A1-06-U-03	3	95ASE1220
CS-A1-06-U-05	5	95ASE1230
CS-A1-06-U-10	10	95ASE1240
CS-A1-06-U-15	15	95ASE1250
CS-A1-06-U-25	25	95ASE1260
CS-A1-06-U-50	50	95A252710
SH4 ADVANCED (SH4--***-A-**-*)**		
Receiver main connector	Length (m)	Order code
CS-A1-10-U-03	3	95A252720
CS-A1-10-U-05	5	95A252730
CS-A1-10-U-10	10	95A252740
CS-A1-10-U-15	15	95A252750
CS-A1-10-U-25	25	95A252760
CS-A1-10-U-50	50	95A252770
SH4 all models		
Transmitter main connector	Length (m)	Order code
CS-A1-03-U-03	3	95ASE1170
CS-A1-03-U-05	5	95ASE1180
CS-A1-03-U-10	10	95ASE1190
CS-A1-03-U-15	15	95ASE1200
CS-A1-03-U-25	25	95ASE1210
CS-A1-03-U-50	50	95A252700
SH4 all Muting models (SH4--***-SM/A-*-5)**		
Receiver/Transmitter secondary connector	Length (m)	Order code
CD12M/0B-050B1	5	CD12M/0B-050B1
CD12M/0B-100B1	10	CD12M/0B-100B1

ACCESSORIES: CASCADE CABLES

CS-H2-03-B-**		
Model	Length (m)	Order code
CS-H2-03-B-01	1 m	95ASE0031
CS-H2-03-B-03	3 m	95ASE0032
CS-H2-03-B-10	10 m	95ASE0033

Cascade cables have 5 poles, M12 male connector on one side, and M12 female connector on the opposite side.
They can be used to cascade SH4 safety light curtains (refer to manual for technical details)

ACCESSORIES: PLUGS

The following are spare parts that can be ordered in substitution of the parts included in SH4 family safety light curtains.

SH-PLUG--***

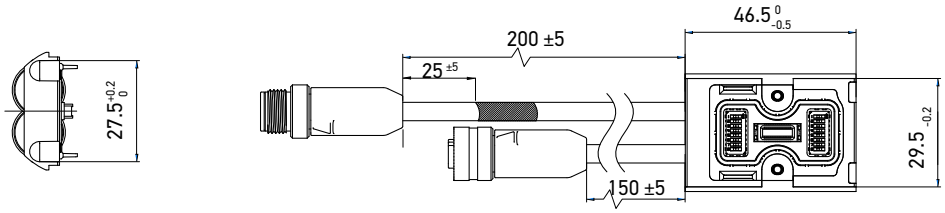

(mm)

Model	Main connector	Secondary connector	Order code
SH-PLUG-5	5-pin M12 male	none	95ASE0047
SH-PLUG-8	8-pin M12 male	none	95ASE0048
SH-PLUG-12	12-pin M12 male	none	95ASE0049
SH-PLUG-5-5	5-pin M12 male	5-pin M12 female	95ASE0050
SH-PLUG-8-5	8-pin M12 male	5-pin M12 female	95ASE0051
SH-PLUG-12-5	12-pin M12 male	5-pin M12 female	95ASE0052

ACCESSORIES: SH-TARGET

SH-TARGET

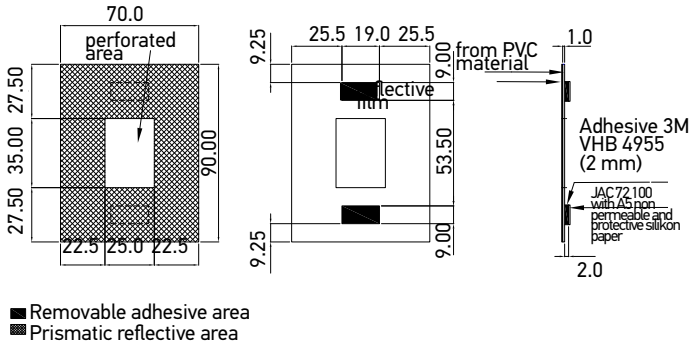

(mm)

Model	Description	Order code
SH-TARGET	Retroreflector target for SH4 BODY alignment	95ASE0046

ACCESSORIES: M12 MALE-MALE ADAPTER

SH-MMA

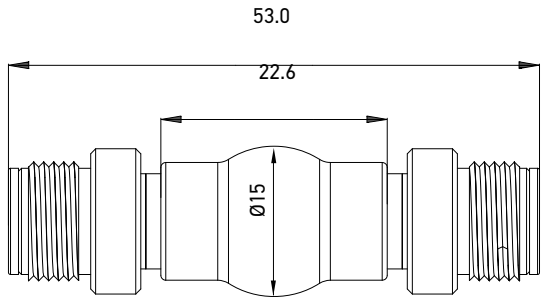

(mm)

Model	Description	Order code	Notes
SH-MMA	M12 Male-Male Adapter	95ASE0044	SH-MMA can be used to convert the SH4 secondary connector (M12 female) in a M12 male, in order to reuse SG muting accessories and cables. It is not needed when using muting accessories designed for SH4.

ACCESSORIES: LASER POINTER

SH-LP

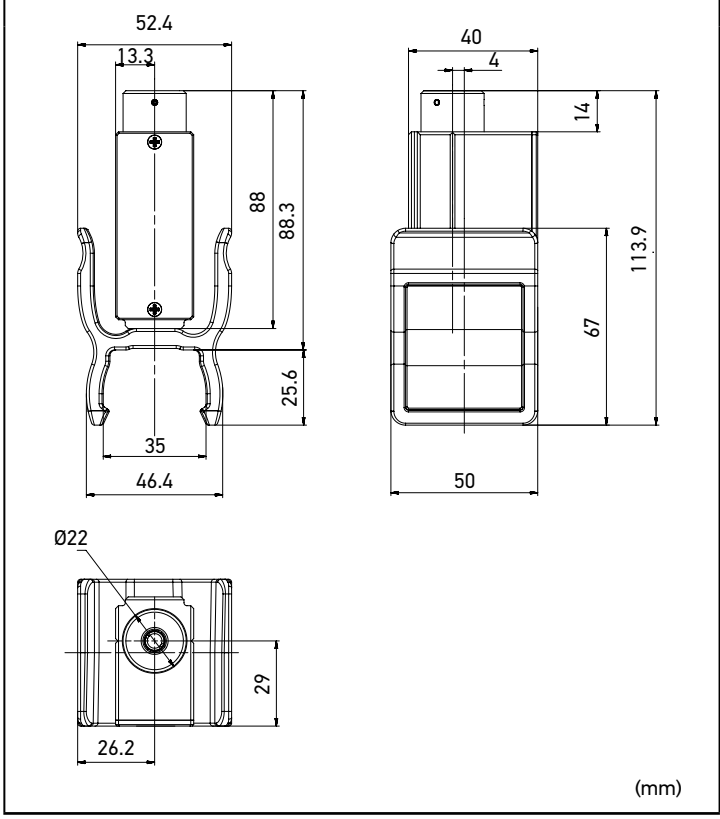

Model	Description	Order code	Notes
SH-LP	Laser pointer class 2	95ASE0030	SH-LP is a laser pointer with a plastic bracket that can be quickly connected to the profile of SH4 safety light curtains in order to ease the alignment of transmitter and receiver.

ACCESSORIES: CABLES FOR MUTING

CV--02-B-007**

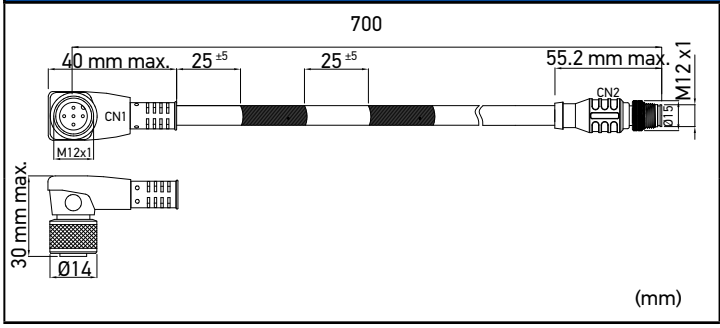

Model	Description	Order code
CV-Y4-02-B-007	M12 4-poles T muting cable for SH4	95ASE0037
CV-L2-02-B-007	M12 4-poles L muting cable for SH4	95ASE0038

ACCESSORIES: SH MUTING CONNECTION BOX

SH-M-CB

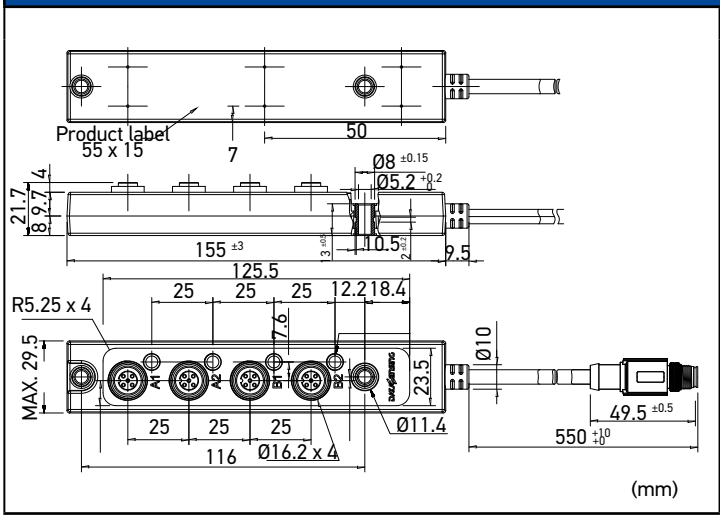

Model	Description	Order code	Order code
SH-M-CB	SH Muting connection box	95ASE0039	The SH-M-CB connection box has 4 M12 connectors on board, one for each muting sensor to be connected to an SH4 light curtain. Unused connectors need to be covered by a cap, in order to maintain IP67 protection. A green LED indicator signals when the muting sensor is generating the corresponding muting signal towards the safety light curtain. Inside the connection box, signals are put in parallel: A1 with A2 and B1 with B2, and forwarded to the pigtail connector, that has to be inserted into the muting connector of the light curtain. This means that muting function of SH4 for which SH-M-CB is compatible are 2-signals T muting and 2-signals L muting.