V3

V3M1/R0-4Q

Ind.M12,AC/DC-NO,1/2"-20UNF,Nsch-LD

"M8, M12, M18, M30 INDUCTIVE WITH AC/DC SUPPLY VOLTAGE"

OVERVIEW

TECHNICAL FEATURES

Detection properties

Nominal sensing distance	6mm
Operanting distance	0…4,8mm
Standard target	18x18mm FE360
Correction Factor	copper: 0,49 / aluminium: 0,54 / brass: 0,58 / stainless steel: 0,79
Thermal drift of Sr	< 10%
Repeat Accuracy	< 5% (UB 24V Ta=23°C ±5°C)
Hysteresis	1 … 20%

Application

Description	M12 standard no-flush mount
Functions	Proximity

Outputs

Output type	MOSFET
Output Function	NO (Vac) - NO/NC (Vdc)
Switching frequency	25Hz (AC) - 500Hz (DC)

Electrical data

Operating Voltage	20...250Vac/50...60Hz...20...250Vdc
Load current	5…140ma(Vac) - 5…200mA (Vdc)
Leakage current	≤ 1mA (Vac) - ≤ 0,7mA (Vdc)
Output voltage drop	≤ 7,5V (Vac) - ≤ 8V (Vdc)
Max ripple content	≤ 10%
LED indicators	Yellow LED output state
Time delay before availability	≤100ms
Short-circuit protection	Yes
Impulsive Overvoltage Protection	Yes
Inrush current	600mA/150ms (AC/DC)

0,1µF @Vmax - 1µF @Vmin	1µF @Vmax - 1µF @Vmin

Mechanical data

Dimensions	M12 x 1 / L = 65mm
Mounting	Unshielded
Material	Nickel-plated brass
Housing material	Nickel-plated brass
Weight	20g
Connections	½" - 20UNF plug
Active Head Material	PA4T
Tightening torque	6Nm
Operating temperature	-25°C…+70°C
Diameter/Dimension	M12

Test/Approvals

Approvals	CE cULus
EMC compatibility	IEC 60947-5-2
Shocks and vibrations	Vibration IEC 60068-2-6 / Shock IEC 60068-2-27
Degree of protection	IP67

Accessories

Supplied Accessories	2 nuts M12x1

Generical Data	
Dimensions	M12 x 1 / L = 65mm
Operating Temperature	-25°C…+70°C
Mechanical Protection	IP67

CONNECTIONS

Eletrical diagram

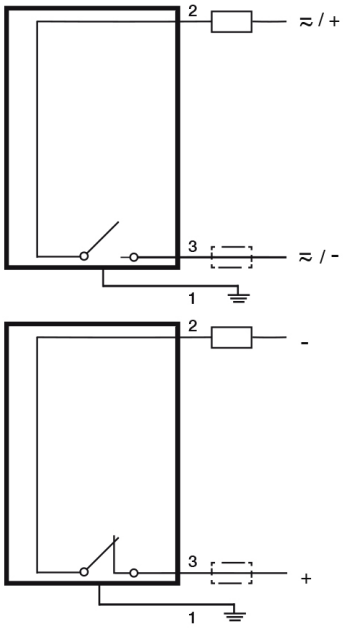

Connector

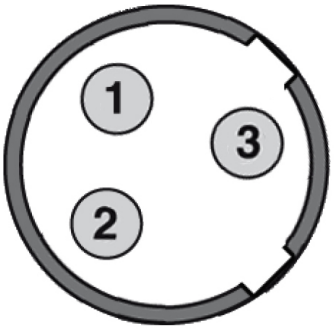

OTHERS

Dimensions

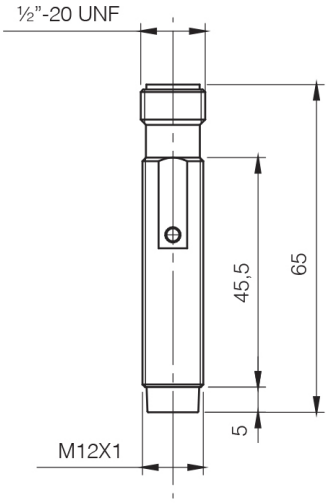

Response curves

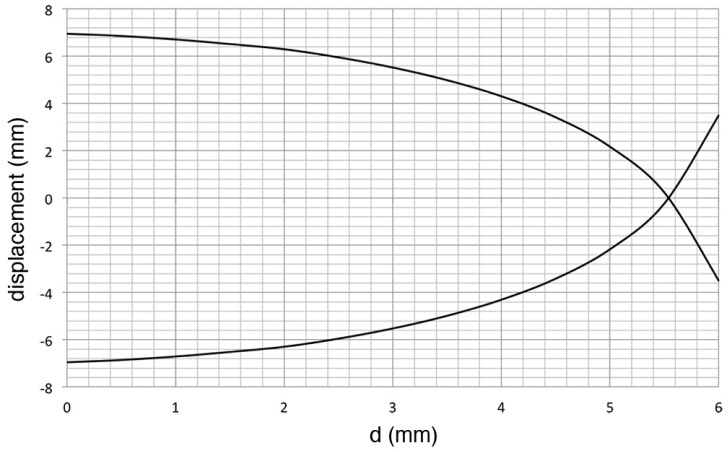

Installation

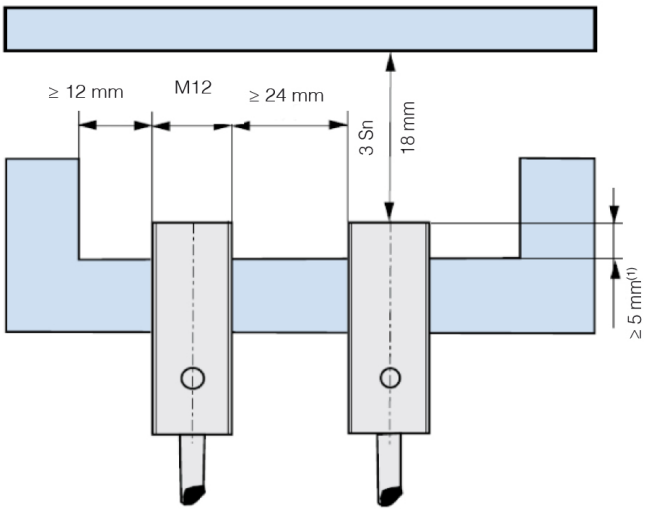

(1) ≥ 6,5 mm for magnetic materials

Datasensing S.r.l.
Strada S.Caterina, 235
41122 Modena (MO)
Tel. 059 420411
Fax 059 253973
E-mail
info@datasensing.com

date of printing
25/10/2026
03:32:14