# V3

## V3E1/R0-3Q

**Ind.M8,AC/DC-NO,1/2"-20UNF,Sch-LD**

**"M8, M12, M18, M30 INDUCTIVE WITH AC/DC SUPPLY VOLTAGE"**

# OVERVIEW

# TECHNICAL FEATURES

Detection properties

| | |
|---|---|
| Nominal sensing distance | 2mm |
| Operanting distance | 0…1,62mm |
| Standard target | 8x8mm FE360 |
| Correction Factor | copper: 0,51 / aluminium: 0,48 / brass: 0,56 / stainless steel: 0,83 |
| Thermal drift of Sr | < 10% |
| Repeat Accuracy | < 5% (UB 24V Ta=23°C ±5°C) |
| Hysteresis | 1 … 20% |

Application

| | |
|---|---|
| Description | M8 standard flush mount |
| Functions | Proximity |

Outputs

| | |
|---|---|
| Output type | MOSFET |
| Output Function | NO (Vac) - NO/NC (Vdc) |
| Switching frequency | 25Hz (AC) - 900Hz (DC) |

Electrical data

| | |
|---|---|
| Operating Voltage | 20...250Vac/50...60Hz...20...250Vdc |
| Load current | 5…140ma(Vac) - 5…200mA (Vdc) |
| Leakage current | ≤ 1mA (Vac) - ≤ 0,7mA (Vdc) |
| Output voltage drop | ≤ 7,5V (Vac) - ≤ 8V (Vdc) |
| Max ripple content | ≤ 10% |
| LED indicators | Yellow LED output state |
| Time delay before availability | ≤100ms |
| Short-circuit protection | Yes |
| Impulsive Overvoltage Protection | Yes |
| Inrush current | 600mA/150ms (AC/DC) |
| | |

| | |
|---|---|
| 0,1µF @Vmax - 1µF @Vmin | 1µF @Vmax - 1µF @Vmin |

Mechanical data

| | |
|---|---|
| Dimensions | M8 x 1 / L = 82mm |
| Mounting | Shielded |
| Material | Nickel-plated brass |
| Housing material | Nickel-plated brass |
| Weight | 20g |
| Connections | ½" - 20UNF plug |
| Active Head Material | PA4T |
| Tightening torque | 3Nm |
| Operating temperature | -25°C…+70°C |
| Diameter/Dimension | M8 |

Test/Approvals

| | |
|---|---|
| Approvals | CE cULus |
| EMC compatibility | IEC 60947-5-2 |
| Shocks and vibrations | Vibration IEC 60068-2-6 / Shock IEC 60068-2-27 |
| Degree of protection | IP67 |

Accessories

| | |
|---|---|
| Supplied Accessories | 2 nuts M8x1 + 2 nuts M12x1 |

| Generical Data | |
|---|---|
| Dimensions | M8 x 1 / L = 82mm |
| Operating Temperature | -25°C…+70°C |
| Mechanical Protection | IP67 |

# CONNECTIONS

Eletrical diagram

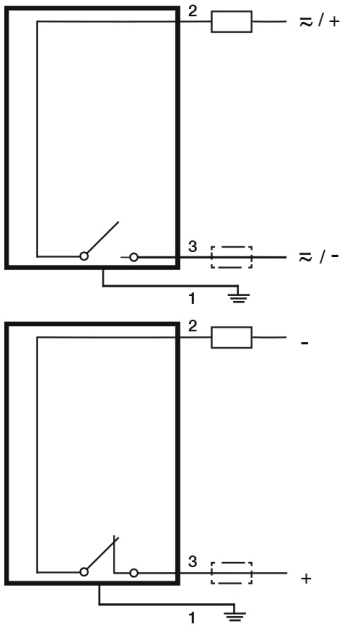


Connector

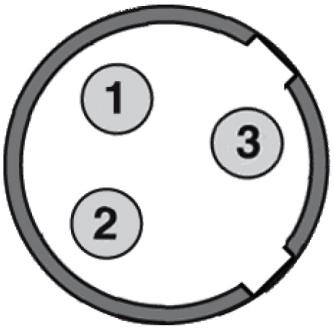


# OTHERS

Dimensions

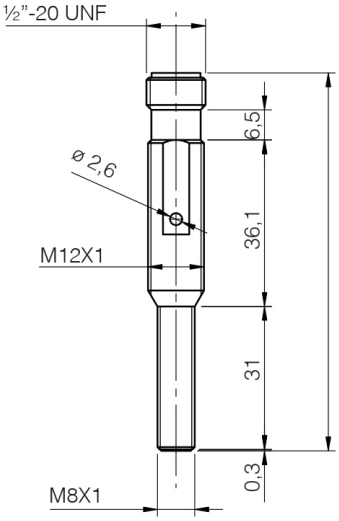

Response curves

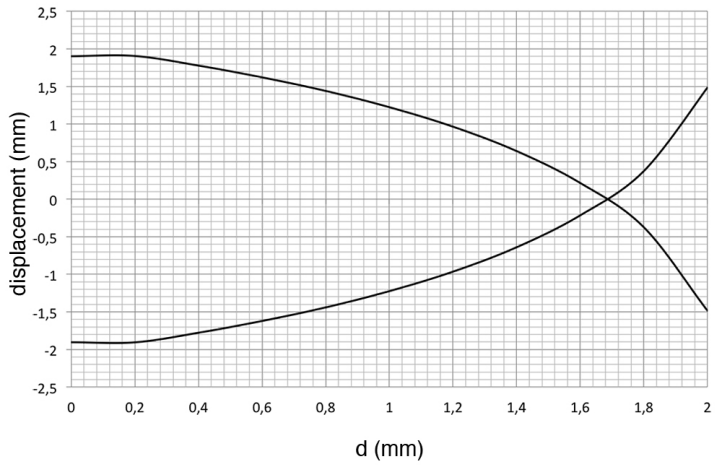


Installation

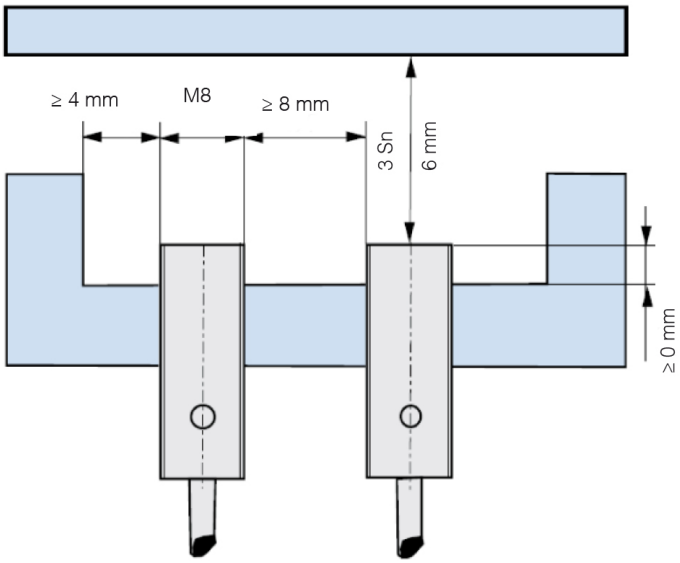


**Datasensing S.r.l.**
Strada S.Caterina, 235
41122 Modena (MO)
Tel. 059 420411
Fax 059 253973
E-mail
info@datasensing.com

**date of printing**
25/10/2026
04:59:17