UK1

UKR1D/GM-1ESY

Ultra.M18,2x NPN-NO/NC,M12 plug,Reflex

M18 CYLINDRICAL DIRECT DIFFUSE & RETRO-REFLECTIVE ULTRASONIC SENSOR UK1 WITH TEACH-IN BUTTON

OVERVIEW

- Models with digital programmable output
- Models with current or voltage analogue outputs
- Adjustable Hysteresis function: model with programmable double digital outputs, specific for levels
- Working area adjusting (window teach or single point teach) by Teach-in button suitable for all models for a fast coming into work
- Multifunction LED indicator: output type, adjustment procedure, NO/NC selection and reverse analog output slope

TECHNICAL FEATURES

Detection properties

Nominal sensing distance	1600mm
Thermal drift of Sr	±2%
Repeat Accuracy	0,50%
Beam angle	15° ± 2°
Resolution	≤3mm

Sensitivity adjustment	Teach-in button
Hysteresis	1%
thermal compensation	Yes
Linearity error	1%
Minimum distance from background	250mm

Application

Function Principle	Retroreflective

Outputs

Output type	2x NPN
Output Function	NO + NC
Switching frequency	3Hz
Response time	500ms

Electrical data

Operating Voltage	10 - 30Vdc
No-Load supply current	≤50mA
Load current	100mA
Leakage current	10µA @ 30Vcc
Output voltage drop	2,2Vmax. @ IL=100 mA

Max ripple content	5%
LED indicators	green: echo - yellow: output
Time delay before availability	≤300ms
Short-circuit protection	Yes
Reverse Polarity Protection	Yes
Impulsive Overvoltage Protection	Yes

Mechanical data

Dimensions	M18 x 1 / L = 91,6mm
Housing material	stainless steel AISI 316L
Weight	100g
Connections	M12 Plug
Tightening torque	1Nm
Operating temperature	- 20°C…+ 70°C
Storage temperature	- 35°C…+ 80° C without freeze
Transducer Frequency	230kHz
Diameter/Dimension	M18

Test/Approvals

Approvals	CE cULus

EMC compatibility	IEC 60947-5-2
Shocks and vibrations	IEC EN60947-5-2 / 7.4
Degree of protection	IP67

Accessories

Supplied Accessories	2 nuts M18x1, 2 washers Ø 18

Generical Data

Dimensions	M18 x 1 / L = 91,6mm
Operating Temperature	- 20°C…+ 70°C
Mechanical Protection	IP67

CONNECTIONS

Eletrical diagram

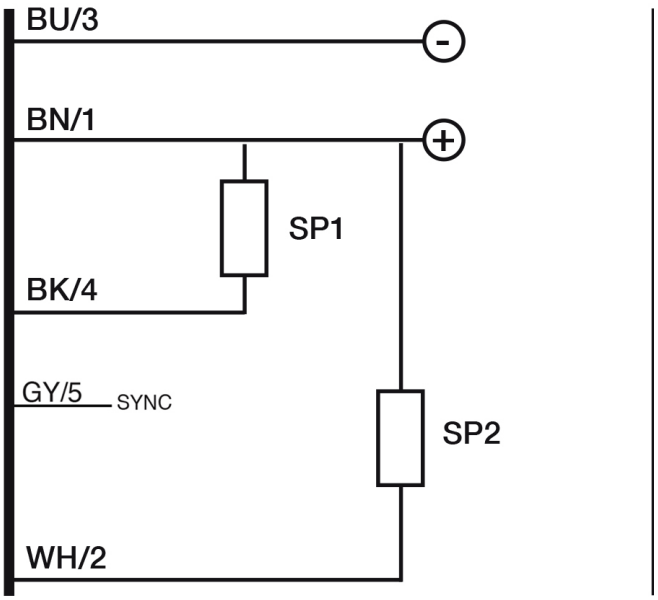

Connector

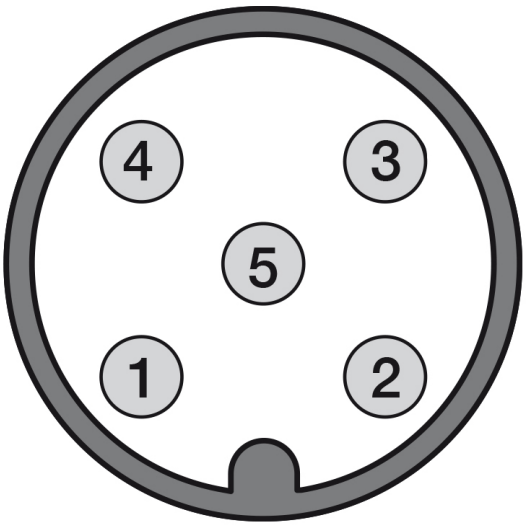

OTHERS

Dimensions

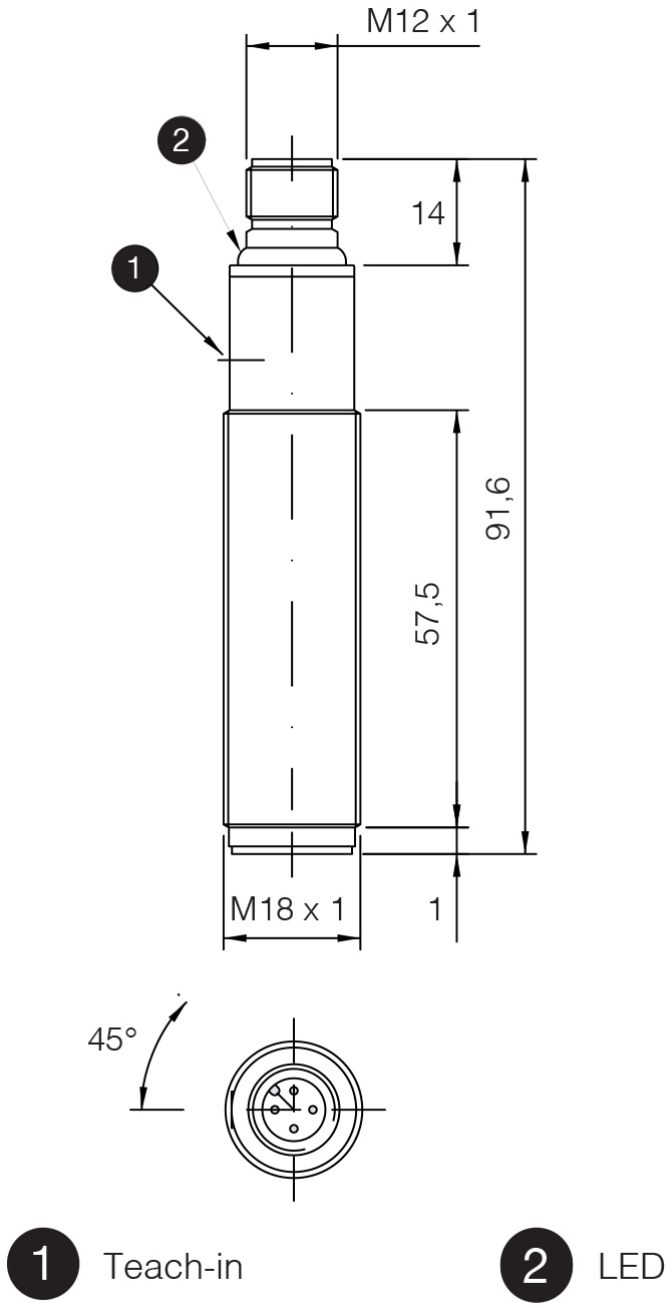

Response curves

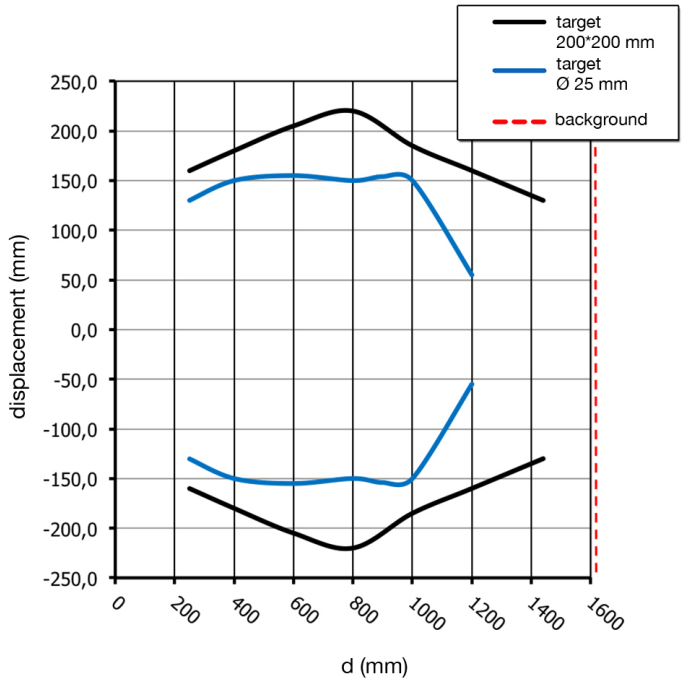

Datasensing S.r.l.
Strada S.Caterina, 235
41122 Modena (MO)
Tel. 059 420411
Fax 059 253973
E-mail
info@datasensing.com

date of printing
25/10/2026
06:25:16