UQ

UQ1C/G7-0E

Ultra.Hybrid,PNP+0-10V,M12 plug,Diffuse

CUBIC ULTRASONIC SENSOR WITH M18 HEAD

OVERVIEW

TECHNICAL FEATURES

Detection properties

Nominal sensing distance	800mm
Thermal drift of Sr	±5%
Resolution	3mm
Sensitivity adjustment	Teach-in button
Hysteresis	1%
thermal compensation	Yes
Minimum sensing distance (blind zone)	60mm

Linearity error	1%
Effective Aperture Angle	8° ± 2°

Application

Function Principle	Diffuse reflection

Outputs

Output type	PNP + 0...10V
Output Function	NO/NC + positive/negative slope
Switching frequency	5Hz
Response time	400ms

Electrical data

Operating Voltage	10 - 30Vdc
No-Load supply current	≤35mA
Load current	100mA
Leakage current	10µA @ 30Vcc
Output voltage drop	2,2Vmax. @ IL=100 mA
Max ripple content	5%
LED indicators	verde: echo - giallo: uscita
Short-circuit protection	si

Reverse Polarity Protection	si
Impulsive Overvoltage Protection	si

Mechanical data

Dimensions	53x38x20mm
Material	PBT
Connections	M12 Plug
Tightening torque	1Nm
Operating temperature	- 20°C…+ 70°C
Storage temperature	- 35°C…+ 80° C senza ghiaccio
Transducer Frequency	230kHz
Diameter/Dimension	Cubic

Test/Approvals

Approvals	CE cULus
EMC compatibility	IEC 60947-5-2
Shocks and vibrations	IEC EN60947-5-2 / 7.4
Degree of protection	IP67

Accessories

Supplied Accessories	1 M18x1 nut

Generical Data

Dimensions	53x38x20mm
Operating Temperature	- 20°C…+ 70°C
Mechanical Protection	IP67

CONNECTIONS

Eletrical diagram

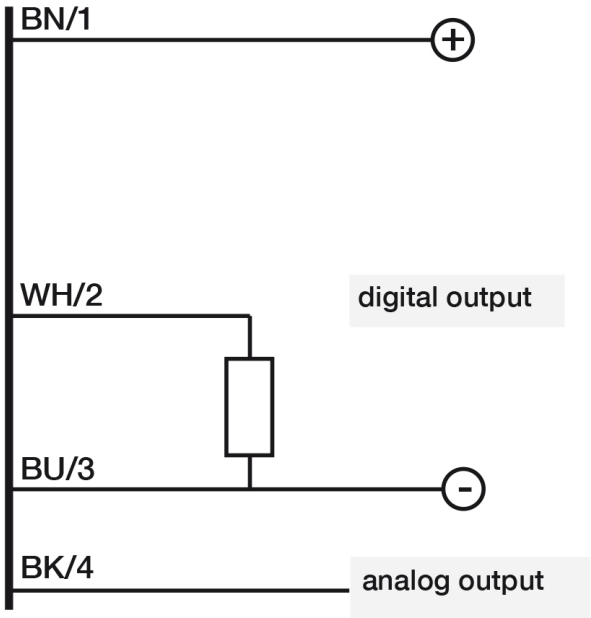

Connector

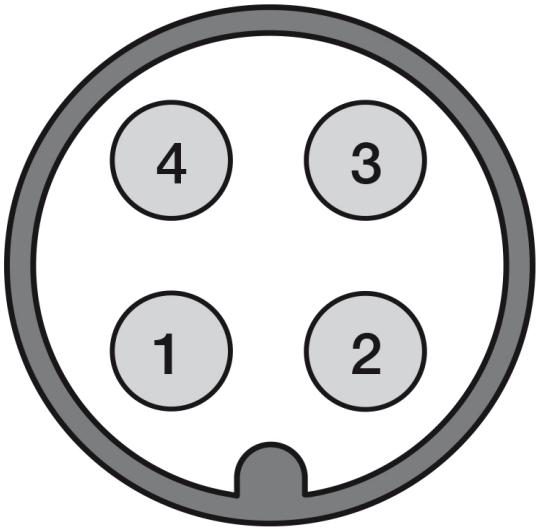

OTHERS

Dimensions

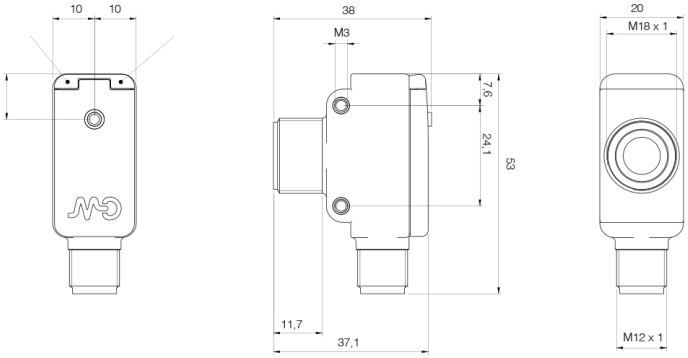

Response curves

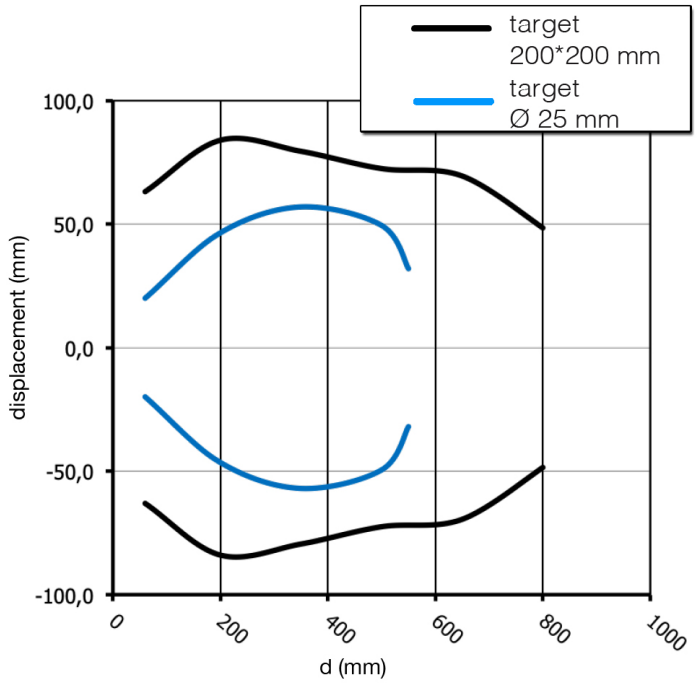

Datasensing S.r.l.
Strada S.Caterina, 235
41122 Modena (MO)
Tel. 059 420411
Fax 059 253973
E-mail
info@datasensing.com

date of printing
25/10/2026
04:02:19