# UQ

## UQ1C/G6-0E

**Ultra.Hybrid,PNP+4-20mA,M12 plug,Diffuse**

**CUBIC ULTRASONIC SENSOR WITH M18 HEAD**

# OVERVIEW

# TECHNICAL FEATURES

Detection properties

| | |
|---|---|
| Nominal sensing distance | 800mm |
| Thermal drift of Sr | ±5% |
| Resolution | 3mm |
| Sensitivity adjustment | Teach-in button |
| Hysteresis | 1% |
| thermal compensation | Yes |
| Minimum sensing distance (blind zone) | 60mm |

| | |
|---|---|
| Linearity error | 1% |
| Effective Aperture Angle | 8° ± 2° |

Application

| | |
|---|---|
| Function Principle | Diffuse reflection |

Outputs

| | |
|---|---|
| Output type | PNP + 4...20mA |
| Output Function | NO/NC + positive/negative slope |
| Switching frequency | 5Hz |
| Response time | 400ms |

Electrical data

| | |
|---|---|
| Operating Voltage | 10 - 30Vdc |
| No-Load supply current | ≤35mA |
| Load current | 100mA |
| Leakage current | 10µA @ 30Vcc |
| Output voltage drop | 2,2Vmax. @ IL=100 mA |
| Max ripple content | 5% |
| LED indicators | verde: echo - giallo: uscita |
| Short-circuit protection | si |

| | |
|---|---|
| Reverse Polarity Protection | si |
| Impulsive Overvoltage Protection | si |

Mechanical data

| | |
|---|---|
| Dimensions | 53x38x20mm |
| Material | PBT |
| Connections | M12 Plug |
| Tightening torque | 1Nm |
| Operating temperature | - 20°C…+ 70°C |
| Storage temperature | - 35°C…+ 80° C senza ghiaccio |
| Transducer Frequency | 230kHz |
| Diameter/Dimension | Cubic |

Test/Approvals

| | |
|---|---|
| Approvals | CE cULus |
| EMC compatibility | IEC 60947-5-2 |
| Shocks and vibrations | IEC EN60947-5-2 / 7.4 |
| Degree of protection | IP67 |

Accessories

| | |
|---|---|
| Supplied Accessories | 1 M18x1 nut |

Generical Data

| | |
|---|---|
| Dimensions | 53x38x20mm |
| Operating Temperature | - 20°C…+ 70°C |
| Mechanical Protection | IP67 |

# CONNECTIONS

Eletrical diagram

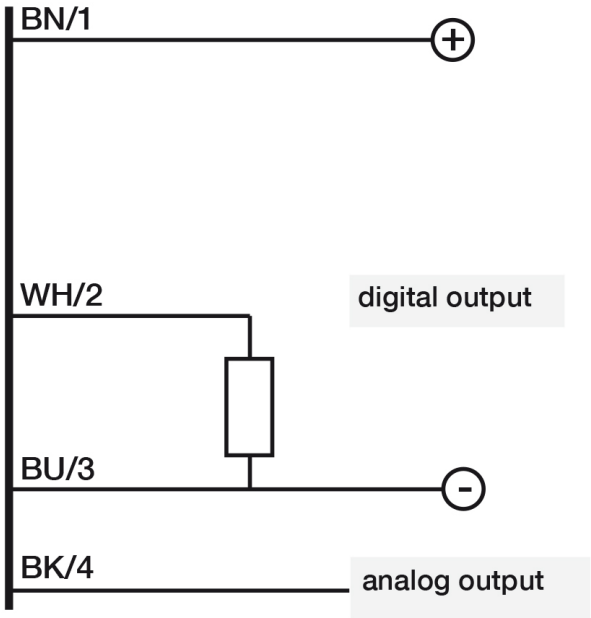


Connector

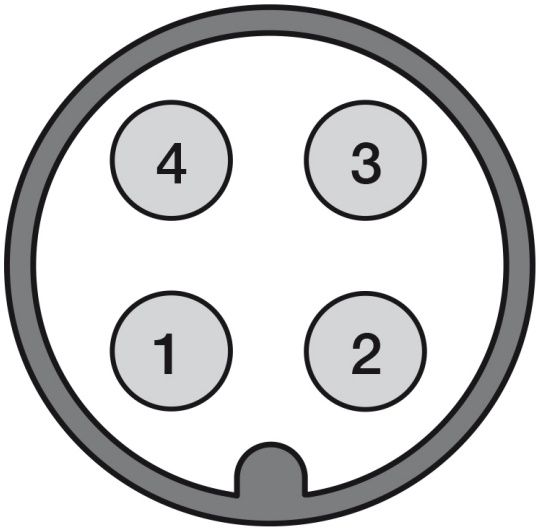


# OTHERS

Dimensions

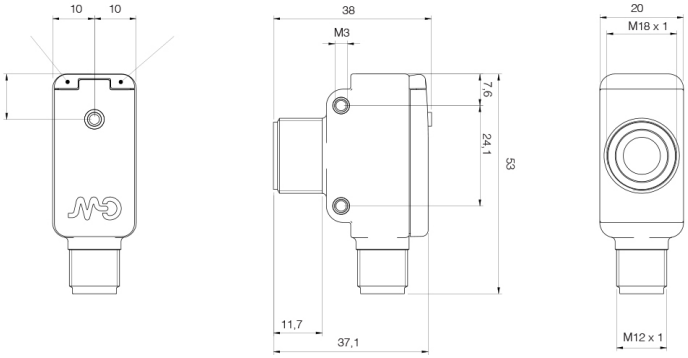


Response curves

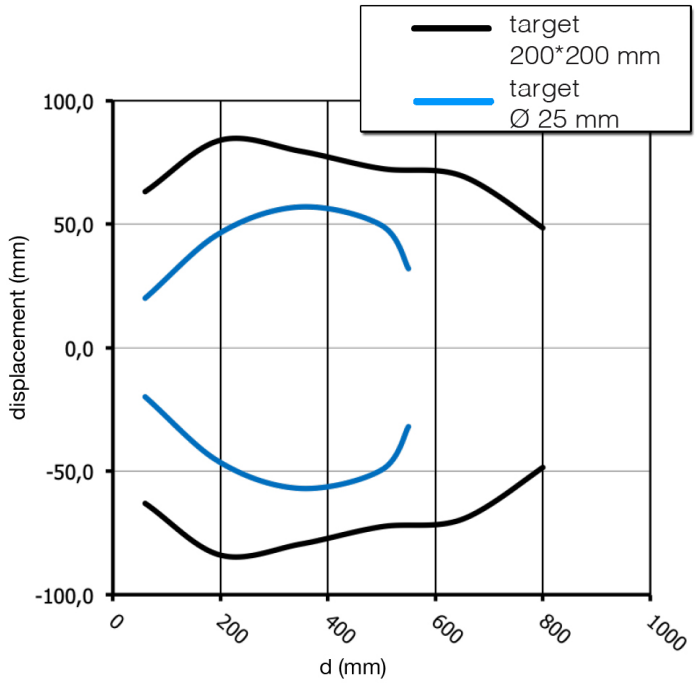


**Datasensing S.r.l.**
Strada S.Caterina, 235
41122 Modena (MO)
Tel. 059 420411
Fax 059 253973
E-mail
info@datasensing.com

**date of printing**
25/10/2026
06:25:58