# UK1

## UK1D/G6-0ASY

### Ultra.M18,PNP+4-20mA,Cable,Diffuse

**M18 CYLINDRICAL DIRECT DIFFUSE & RETRO-REFLECTIVE ULTRASONIC SENSOR UK1 WITH TEACH-IN BUTTON**

# OVERVIEW

- Models with digital programmable output
- Models with current or voltage analogue outputs
- Adjustable Hysteresis function: model with programmable double digital outputs, specific for levels
- Working area adjusting (window teach or single point teach) by Teach-in button suitable for all models for a fast coming into work
- Multifunction LED indicator: output type, adjustment procedure, NO/NC selection and reverse analog output slope

# TECHNICAL FEATURES

Detection properties

| | |
|---|---|
| Nominal sensing distance | 1600mm |
| Thermal drift of Sr | ±2% |
| Repeat Accuracy | 0,50% |
| Beam angle | 15° ± 2° |
| Resolution | ≤3mm |

| | |
|---|---|
| Sensitivity adjustment | Teach-in button |
| Hysteresis | 1% |
| thermal compensation | Yes |
| Minimum sensing distance (blind zone) | 150mm |
| Linearity error | 1% |

Application

| | |
|---|---|
| Function Principle | Diffuse reflection |

Outputs

| | |
|---|---|
| Output type | PNP + 4...20mA |
| Output Function | NO/NC + positive/negative slope |
| Switching frequency | 3Hz |
| Response time | 500ms |

Electrical data

| | |
|---|---|
| Operating Voltage | 10 - 30Vdc |
| No-Load supply current | ≤50mA |
| Load current | 100mA |
| Leakage current | 10µA @ 30Vcc |
| Output voltage drop | 2,2Vmax. @ IL=100 mA |

| | |
|---|---|
| Max ripple content | 5% |
| LED indicators | green: echo - yellow: output |
| Time delay before availability | ≤300ms |
| Short-circuit protection | Yes |
| Reverse Polarity Protection | Yes |
| Impulsive Overvoltage Protection | Yes |

Mechanical data

| | |
|---|---|
| Dimensions | M18 x 1 / L = 83,6mm |
| Housing material | PBT housing |
| Weight | 110g |
| Connections | 2m PVC Cable |
| Tightening torque | 1Nm |
| Operating temperature | - 20°C…+ 70°C |
| Storage temperature | - 35°C…+ 80° C without freeze |
| Transducer Frequency | 230kHz |
| Diameter/Dimension | M18 |

Test/Approvals

| | |
|---|---|
| Approvals | CE cULus |

| | |
|---|---|
| EMC compatibility | IEC 60947-5-2 |
| Shocks and vibrations | IEC EN60947-5-2 / 7.4 |
| Degree of protection | IP67 |

Accessories

| | |
|---|---|
| Supplied Accessories | 2 nuts M18x1, 2 washers Ø 18 |

Generical Data

| | |
|---|---|
| Dimensions | M18 x 1 / L = 83,6mm |
| Operating Temperature | - 20°C…+ 70°C |
| Mechanical Protection | IP67 |

# CONNECTIONS

Eletrical diagram

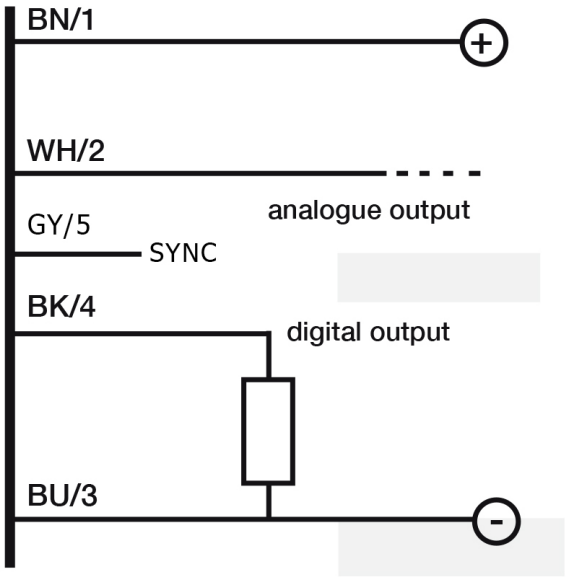

Connector

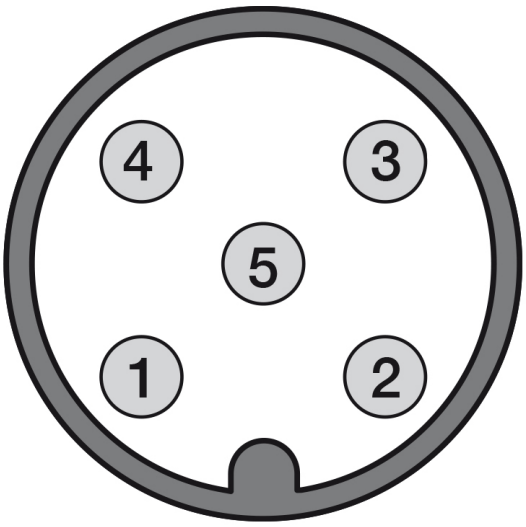


# OTHERS

Dimensions

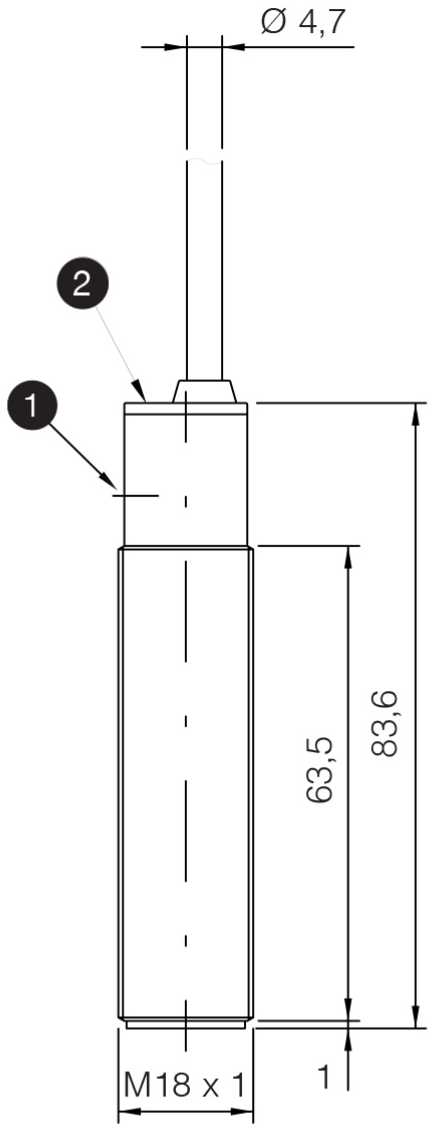


1 Teach-in

2 LED

Response curves

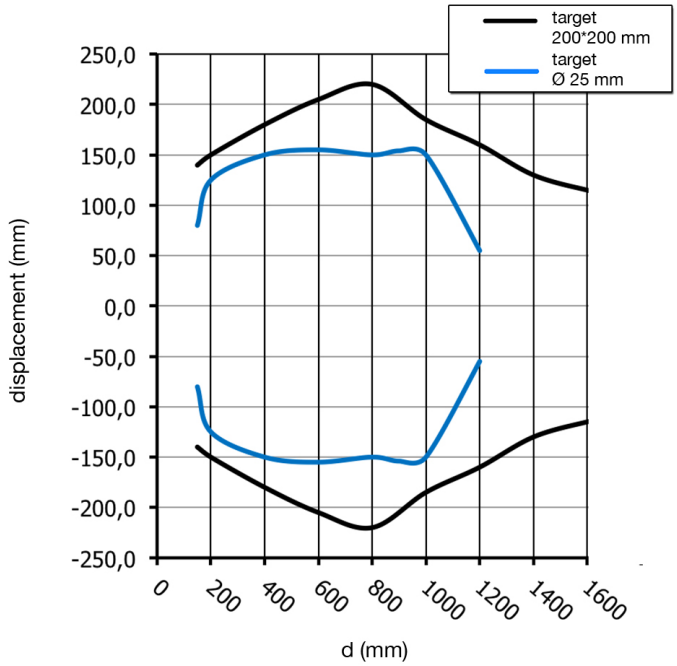


**Datasensing S.r.l.**
Strada S.Caterina, 235
41122 Modena (MO)
Tel. 059 420411
Fax 059 253973
E-mail
info@datasensing.com

**date of printing**
25/10/2026
06:17:06