IL1

IL1/CP-3A

Ind.10x28x16,PNP-NC,Cable,Sch-LD

10 X 28 X 16 MM CUBIC MINIATURIZED INDUCTIVE SENSORS

OVERVIEW

- Compact dimensions: 10 x 28 x 16 mm
- Supply voltage 10...30 Vdc, output current 300 mA
- LED status indicator
- IP 67 housing protection
- Complete protection against electrical damages

TECHNICAL FEATURES

Detection properties

Nominal sensing distance	3mm
Operanting distance	0…2,4mm
Standard target	12x12mm FE360
Correction Factor	copper: 0,25 / aluminium: 0,28 / brass: 0,37 / stainless steel: 0,63
Thermal drift of Sr	< 10%

Repeat Accuracy	< 5% (UB 24V Ta=23°C ±5°C)
Hysteresis	1 … 20%

Application

Description	10,3x28x16mm cubic flush mount
Functions	Proximity

Outputs

Output type	PNP
Output Function	NC
Switching frequency	3kHz

Electrical data

Operating Voltage	10...30Vdc
No-Load supply current	≤ 10mA
Load current	≤ 300mA
Leakage current	≤ 0,12mA
Output voltage drop	≤ 1,5V @100mA
Max ripple content	≤ 10%
LED indicators	Yellow LED output state
Time delay before availability	≤100ms
Short-circuit protection	Yes

Reverse Polarity Protection	Yes
Impulsive Overvoltage Protection	Yes
Protection against inductive loads	Yes

Mechanical data

Dimensions	28 x 16 x 10,3 mm
Mounting	Shielded
Material	PA
Housing material	PA
Weight	63g
Connections	2m PVC Cable
Active Head Material	PA
Operating temperature	-25°C…+70°C
Diameter/Dimension	10,3x28x16mm

Test/Approvals

Approvals	CE
EMC compatibility	IEC 60947-5-2
Shocks and vibrations	Vibration IEC 60068-2-6 / Shock IEC 60068-2-27
Degree of protection	IP67

Generical Data

Dimensions	28 x 16 x 10,3 mm
Operating Temperature	-25°C…+70°C
Mechanical Protection	IP67

CONNECTIONS

Eletrical diagram

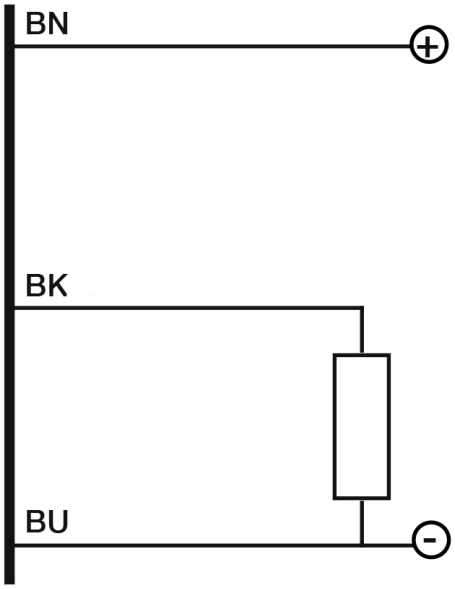

OTHERS

Dimensions

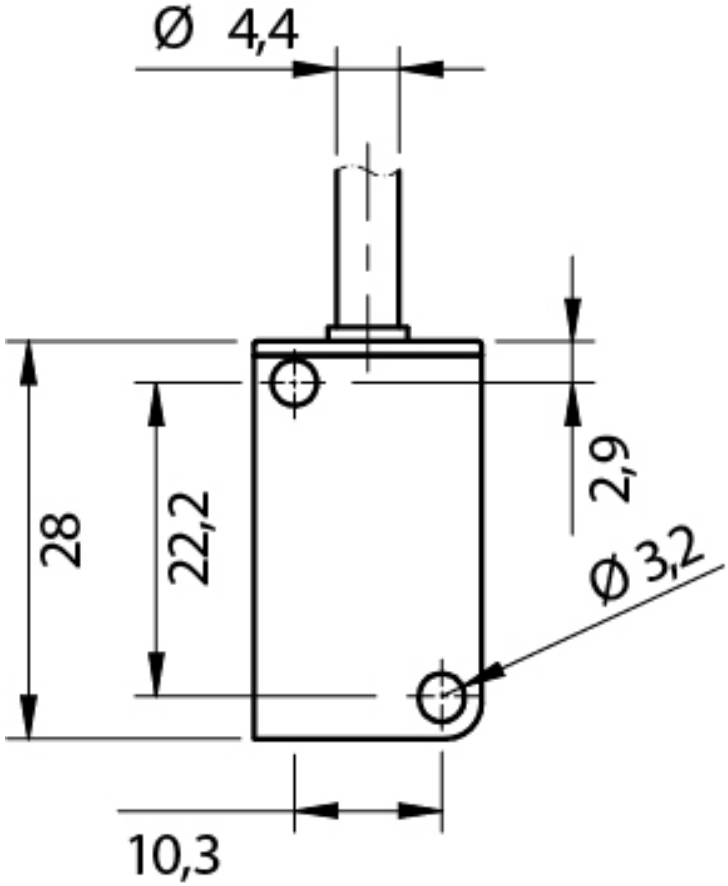

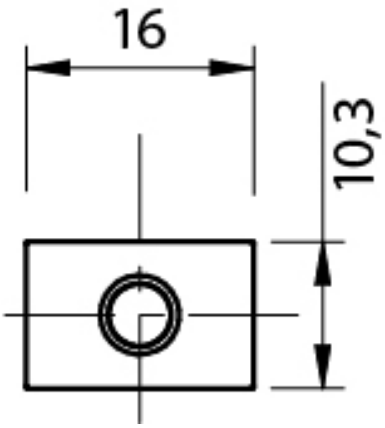

Response curves

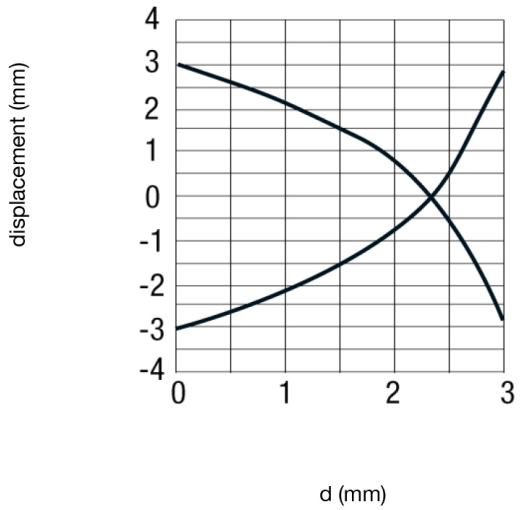

Installation

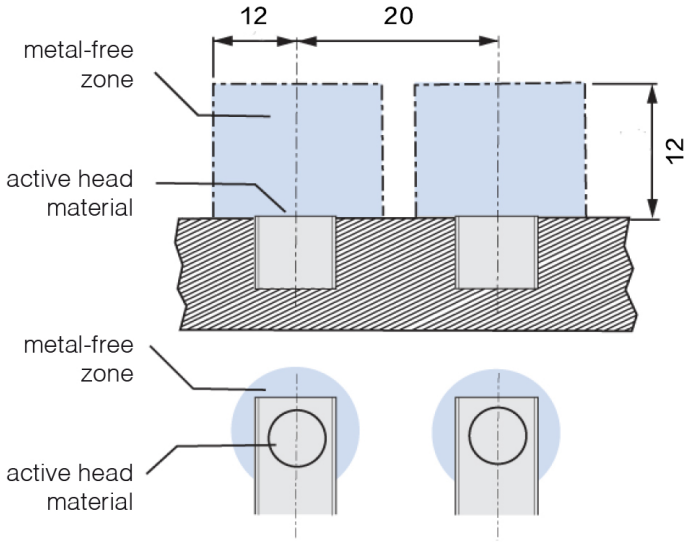

Datasensing S.r.l.
Strada S.Caterina, 235
41122 Modena (MO)
Tel. 059 420411
Fax 059 253973
E-mail
info@datasensing.com

date of printing
25/10/2026
03:33:52