AM

AM6/CN-3A

Ind.M12,NPN-NC,Cable,Sch-LD

M12 CYLINDRICAL INDUCTIVE SENSORS

OVERVIEW

- Wide range of models: standard, short body, long distance
- Output: cable, M12 and M8 plug cable exit
- Models with 2, 3 wires
- ATEX models, cat. 3, available on request

TECHNICAL FEATURES

Detection properties

Nominal sensing distance	4mm
Operanting distance	0…3,2mm
Standard target	12x12mm FE360
Correction Factor	copper: 0,33 / aluminium: 0,4 / brass: 0,5 / stainless steel: 1,05
Thermal drift of Sr	< 10%
Repeat Accuracy	< 5% (UB 24V Ta=23°C ±5°C)

Hysteresis	1 … 20%

Application

Description	M12 short case flush mount
Functions	Proximity

Outputs

Output type	NPN
Output Function	NC
Switching frequency	2kHz

Electrical data

Operating Voltage	10...30Vdc
No-Load supply current	≤ 10mA
Load current	≤ 200mA
Leakage current	≤ 10µA
Output voltage drop	≤ 1,8V @200mA
Max ripple content	≤ 10%
LED indicators	Yellow LED output state
Time delay before availability	≤ 50ms
Short-circuit protection	Yes

Reverse Polarity Protection	Yes
Impulsive Overvoltage Protection	Yes
Protection against inductive loads	Yes

Mechanical data

Dimensions	M12 x 1 / L = 39,8mm
Mounting	Shielded
Material	Nickel-plated brass
Housing material	Nickel-plated brass
Weight	60g
Connections	2m PVC Cable
Active Head Material	PBT
Tightening torque	10Nm
Operating temperature	-25°C…+70°C
Diameter/Dimension	M12

Test/Approvals

Approvals	CE UR
EMC compatibility	IEC 60947-5-2
Shocks and vibrations	Vibration IEC 60068-2-6 / Shock IEC 60068-2-27
Degree of protection	IP67

Accessories	
Supplied Accessories	2 nuts M12x1
Generical Data	
Dimensions	M12 x 1 / L = 39,8mm
Operating Temperature	-25°C…+70°C
Mechanical Protection	IP67

CONNECTIONS

Eletrical diagram

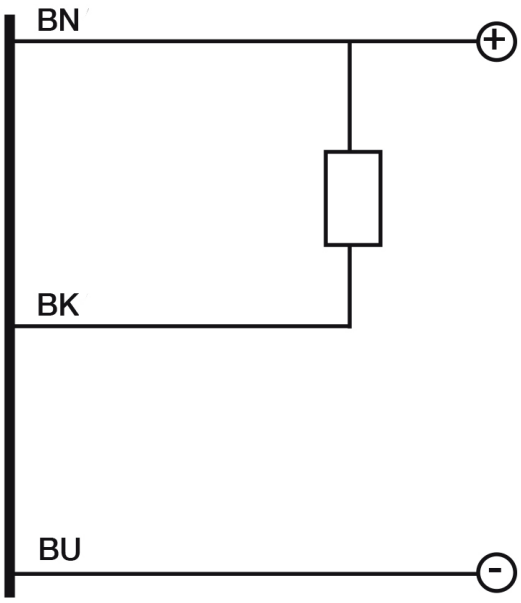

OTHERS

Dimensions

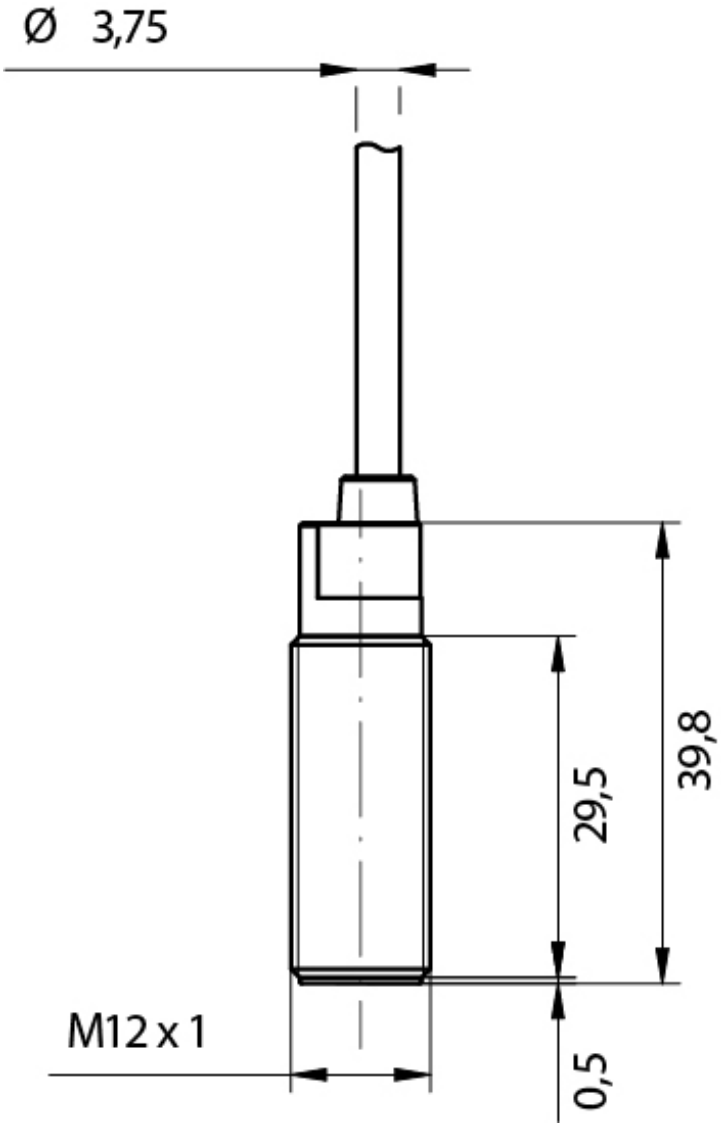

Response curves

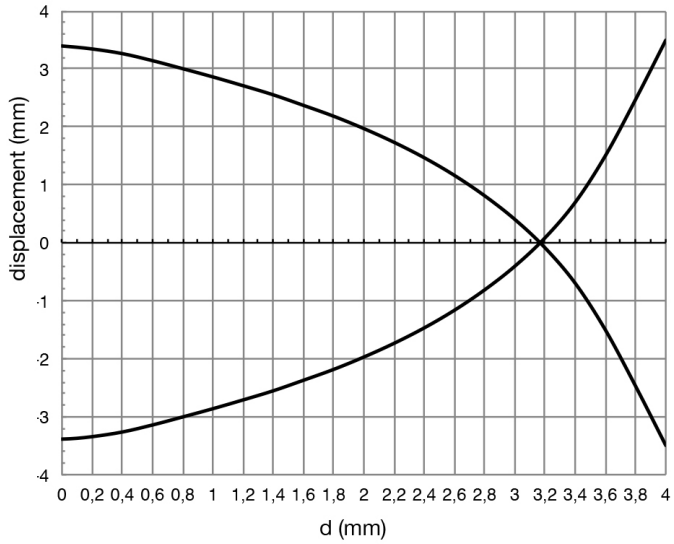

Installation

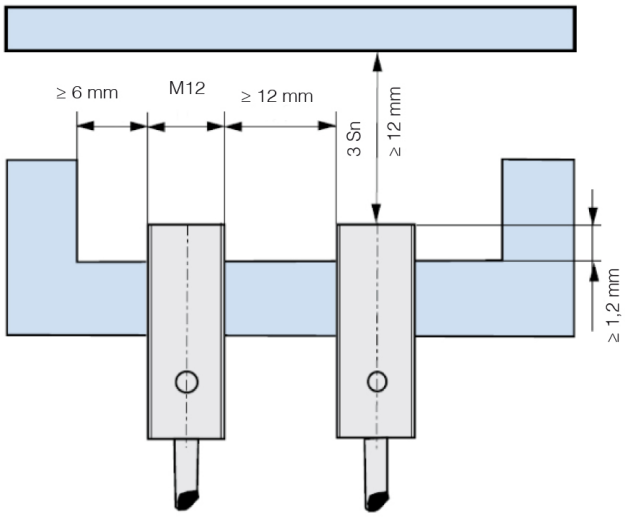

Datasensing S.r.l.
Strada S.Caterina, 235
41122 Modena (MO)
Tel. 059 420411
Fax 059 253973
E-mail
info@datasensing.com

date of printing
25/10/2026
03:26:16