# AT

## AT1/CN-2H

**Ind.M30,NPN-NC,M12 Plug,Nsch-STD**

**M30 CYLINDRICAL INDUCTIVE SENSORS**

# OVERVIEW

- Wide range of models: standard, long distance
- Output: cable, M12 and plug cable exit
- Models with 2, 3, and 4 wires
- ATEX models, cat. 3, available on request
- Models with complementary output (NO + NC)
- Complete protection against electrical damages

# TECHNICAL FEATURES

Detection properties

| | |
|---|---|
| Nominal sensing distance | 15mm |
| Operanting distance | 0…12,1mm |
| Standard target | 45x45mm FE360 |
| Correction Factor | copper: 0,45 / aluminium: 0,50 / brass: 0,55 / stainless steel: 0,80 |
| Thermal drift of Sr | < 10% |

| | |
|---|---|
| Repeat Accuracy | < 5% (UB 24V Ta=23°C ±5°C) |
| Hysteresis | 1 … 20% |

Application

| | |
|---|---|
| Description | M30 standard no-flush mount |
| Functions | Proximity |

Outputs

| | |
|---|---|
| Output type | NPN |
| Output Function | NC |
| Switching frequency | 200Hz |

Electrical data

| | |
|---|---|
| Operating Voltage | 10...30Vdc |
| No-Load supply current | ≤ 20mA |
| Load current | ≤ 400mA |
| Leakage current | ≤ 10µA |
| Output voltage drop | ≤ 1V @400mA |
| Max ripple content | ≤ 10% |
| LED indicators | Yellow LED output state |
| Time delay before availability | ≤100ms |
| Short-circuit protection | Yes |

| | |
|---|---|
| Reverse Polarity Protection | Yes |
| Impulsive Overvoltage Protection | Yes |
| Protection against inductive loads | Yes |

Mechanical data

| | |
|---|---|
| Dimensions | M30 x 1,5 / L = 76mm |
| Mounting | Unshielded |
| Material | Nickel-plated brass |
| Housing material | Nickel-plated brass |
| Weight | 150g |
| Connections | M12 Plug |
| Active Head Material | PBT |
| Tightening torque | 50Nm |
| Operating temperature | -25°C…+70°C |
| Diameter/Dimension | M30 |

Test/Approvals

| | |
|---|---|
| Approvals | CE UR |
| EMC compatibility | IEC 60947-5-2 |
| Shocks and vibrations | Vibration IEC 60068-2-6 / Shock IEC 60068-2-27 |

| | |
|---|---|
| Degree of protection | IP67 |

Accessories

| | |
|---|---|
| Supplied Accessories | 2 nuts M30x1.5 |

Generical Data

| | |
|---|---|
| Dimensions | M30 x 1,5 / L = 76mm |
| Operating Temperature | -25°C…+70°C |
| Mechanical Protection | IP67 |

# CONNECTIONS

Eletrical diagram

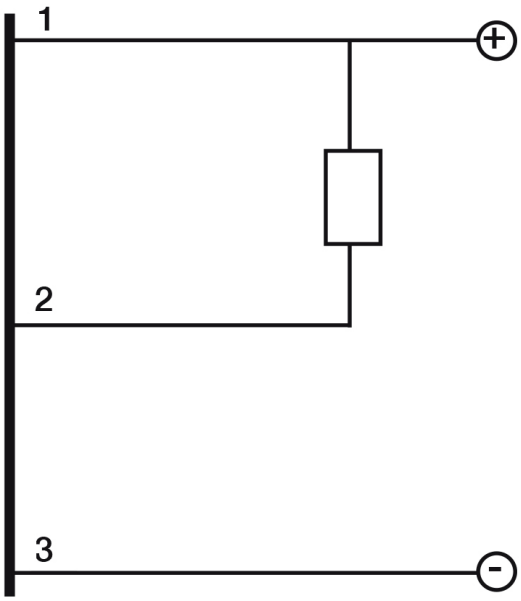


Connector

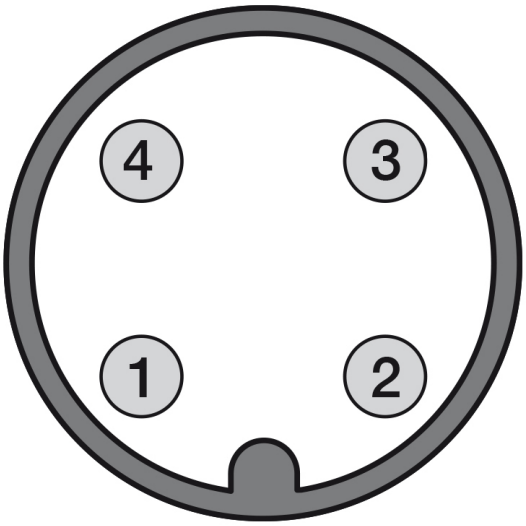


# OTHERS

Dimensions

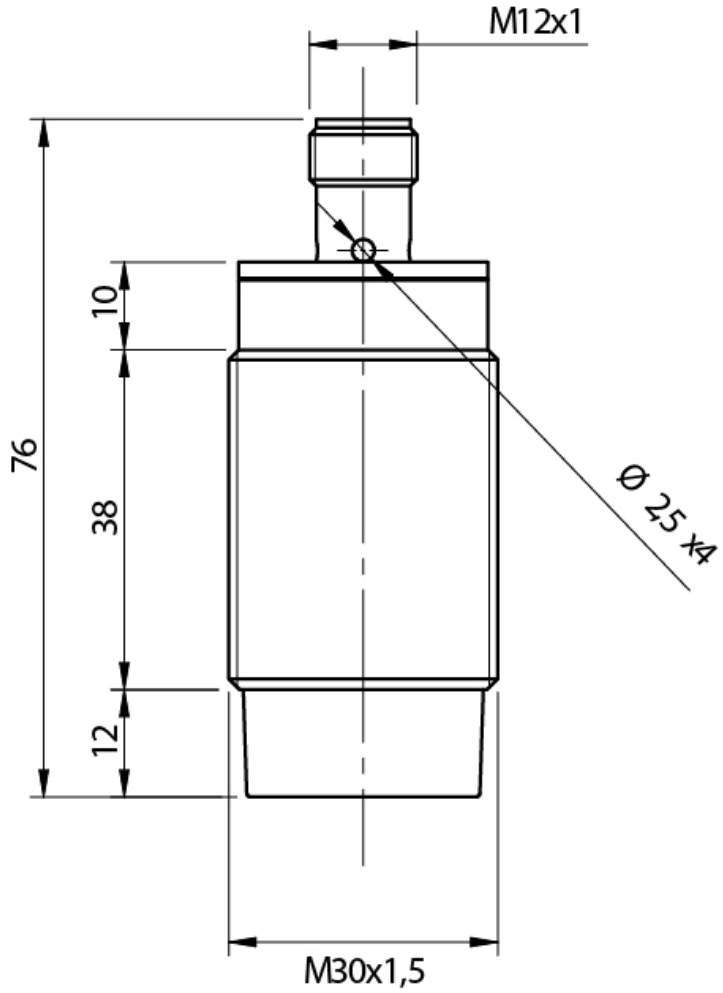


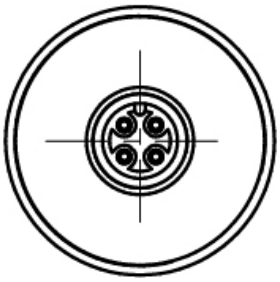

Response curves

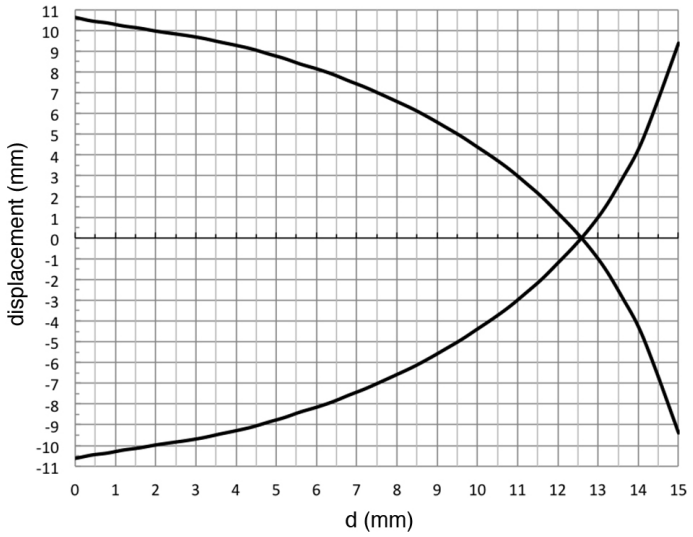


## Installation

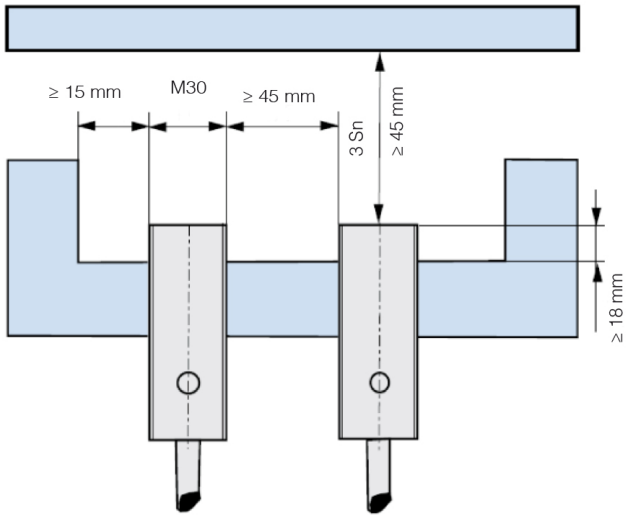


(1) ≥ 9 mm for non magnetic materials

**Datasensing S.r.l.**
Strada S.Caterina, 235
41122 Modena (MO)
Tel. 059 420411
Fax 059 253973
E-mail
info@datasensing.com

**date of printing**
25/10/2026
03:24:22