AT

AT1/CN-1B

Ind.M30,NPN-NC,Cable,Sch-STD

M30 CYLINDRICAL INDUCTIVE SENSORS

OVERVIEW

- Wide range of models: standard, long distance
- Output: cable, M12 and plug cable exit
- Models with 2, 3, and 4 wires
- ATEX models, cat. 3, available on request
- Models with complementary output (NO + NC)
- Complete protection against electrical damages

TECHNICAL FEATURES

Detection properties

Nominal sensing distance	10mm
Operanting distance	0…8,1mm
Standard target	30x30mm FE360
Correction Factor	copper: 0,35 / aluminium: 0,45 / brass: 0,50 / stainless steel: 0,75
Thermal drift of Sr	< 10%

Repeat Accuracy	< 5% (UB 24V Ta=23°C ±5°C)
Hysteresis	1 … 20%

Application

Description	M30 standard flush mount
Functions	Proximity

Outputs

Output type	NPN
Output Function	NC
Switching frequency	200Hz

Electrical data

Operating Voltage	10...30Vdc
No-Load supply current	≤ 20mA
Load current	≤ 400mA
Leakage current	≤ 10µA
Output voltage drop	≤ 1V @400mA
Max ripple content	≤ 10%
LED indicators	Yellow LED output state
Time delay before availability	≤100ms
Short-circuit protection	Yes

Reverse Polarity Protection	Yes
Impulsive Overvoltage Protection	Yes
Protection against inductive loads	Yes

Mechanical data

Dimensions	M30 x 1,5 / L = 80mm
Mounting	Shielded
Material	Nickel-plated brass
Housing material	Nickel-plated brass
Weight	230g
Connections	2m PVC Cable with tang
Active Head Material	PBT
Tightening torque	50Nm
Operating temperature	-25°C…+70°C
Diameter/Dimension	M30

Test/Approvals

Approvals	CE UR
EMC compatibility	IEC 60947-5-2
Shocks and vibrations	Vibration IEC 60068-2-6 / Shock IEC 60068-2-27

Degree of protection	IP67

Accessories

Supplied Accessories	2 nuts M30x1.5

Generical Data

Dimensions	M30 x 1,5 / L = 80mm
Operating Temperature	-25°C…+70°C
Mechanical Protection	IP67

CONNECTIONS

Eletrical diagram

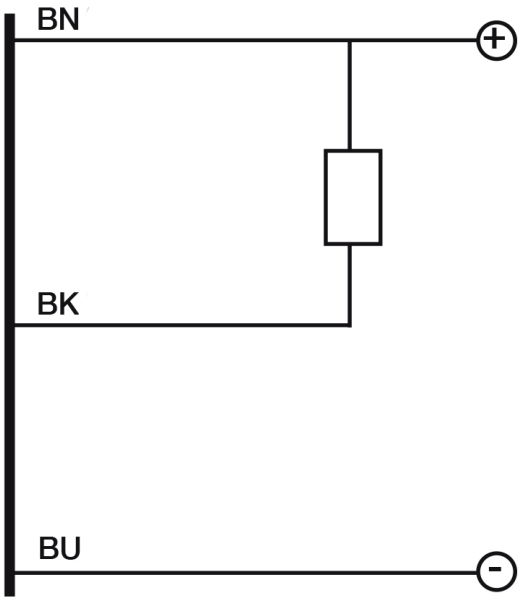

OTHERS

Dimensions

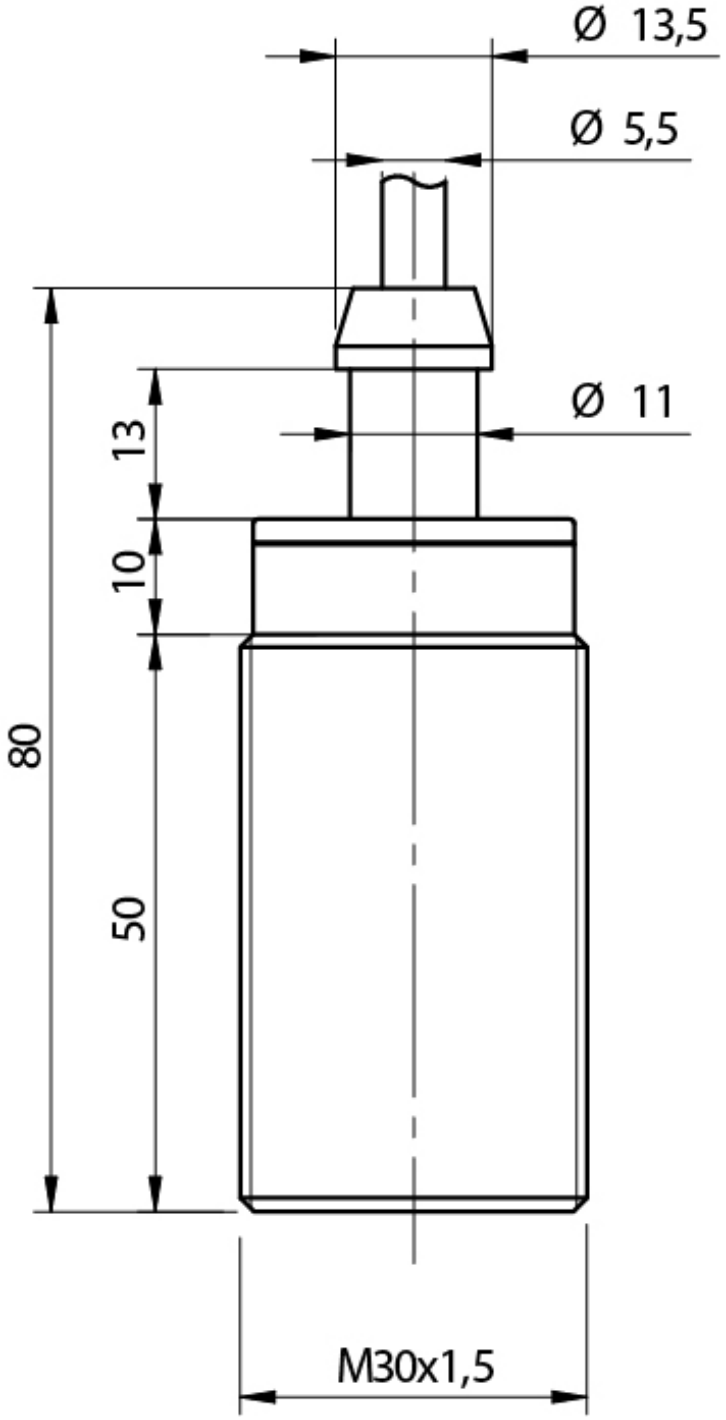

Response curves

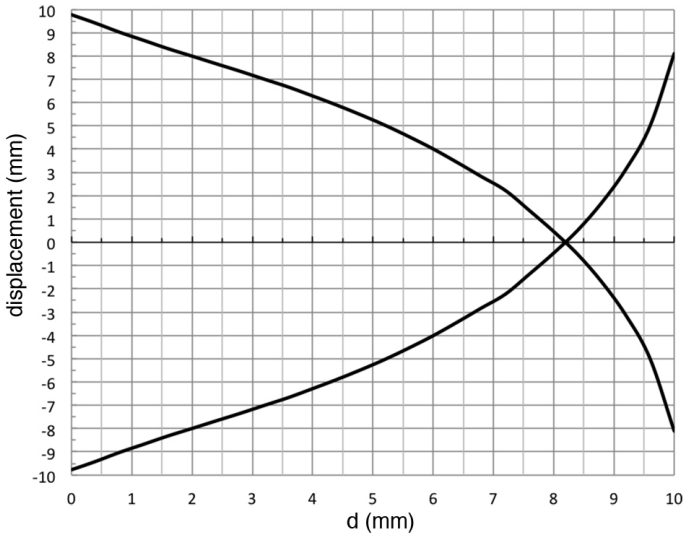

Installation

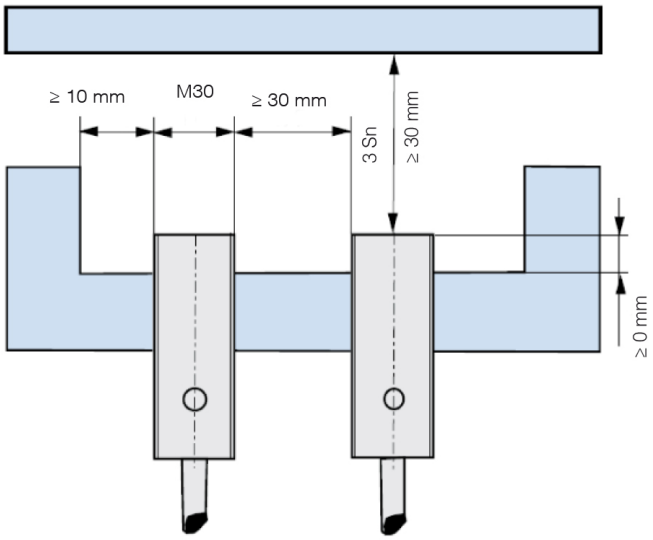

Datasensing S.r.l.
Strada S.Caterina, 235
41122 Modena (MO)
Tel. 059 420411
Fax 059 253973
E-mail
info@datasensing.com

date of printing
25/10/2026
03:24:20