CATALOG

Safety

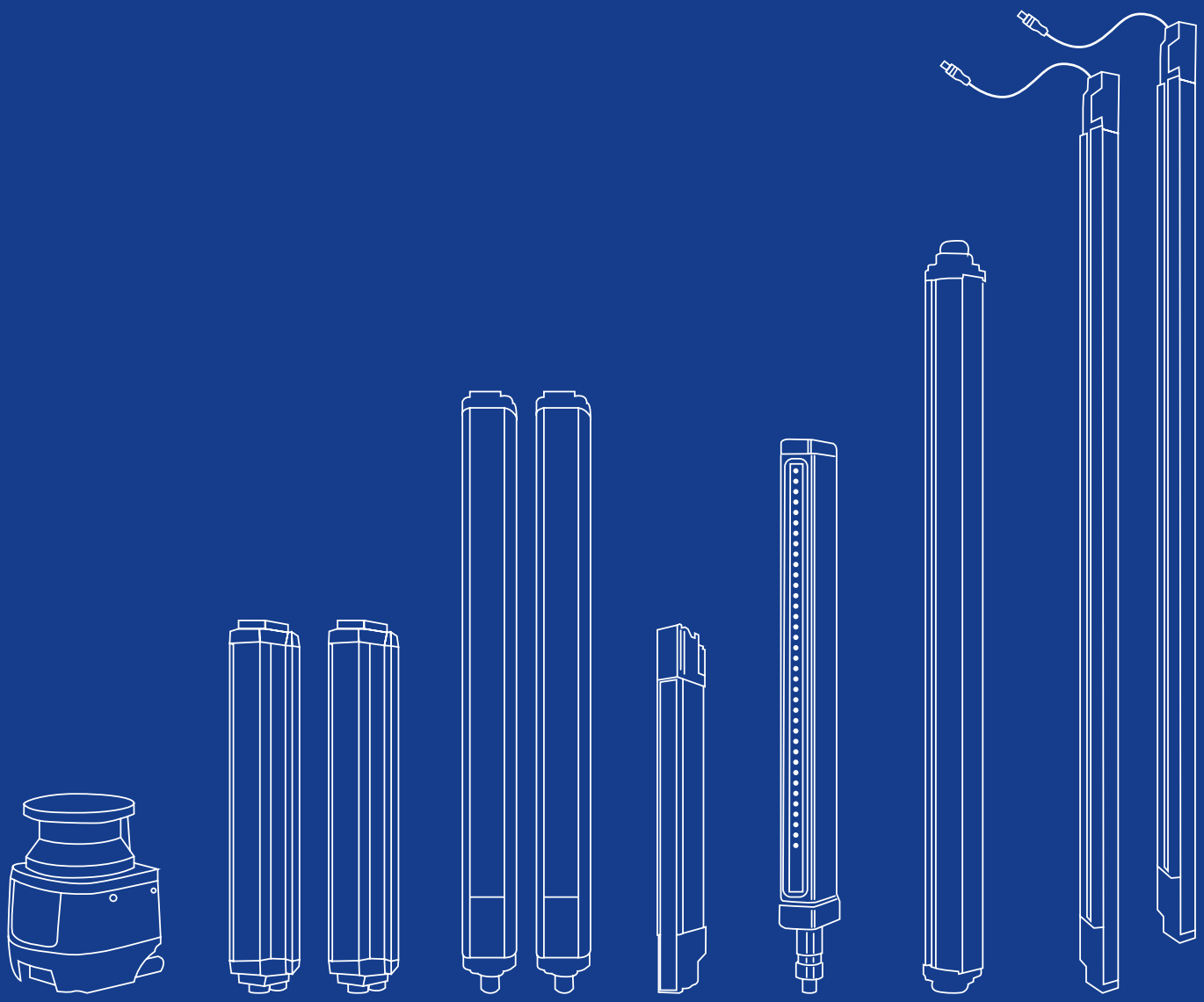

DATALOGIC
EMPOWER YOUR VISION

SAFETY

High performance protection tube for harsh environments

Interfaces between light curtains and safety system

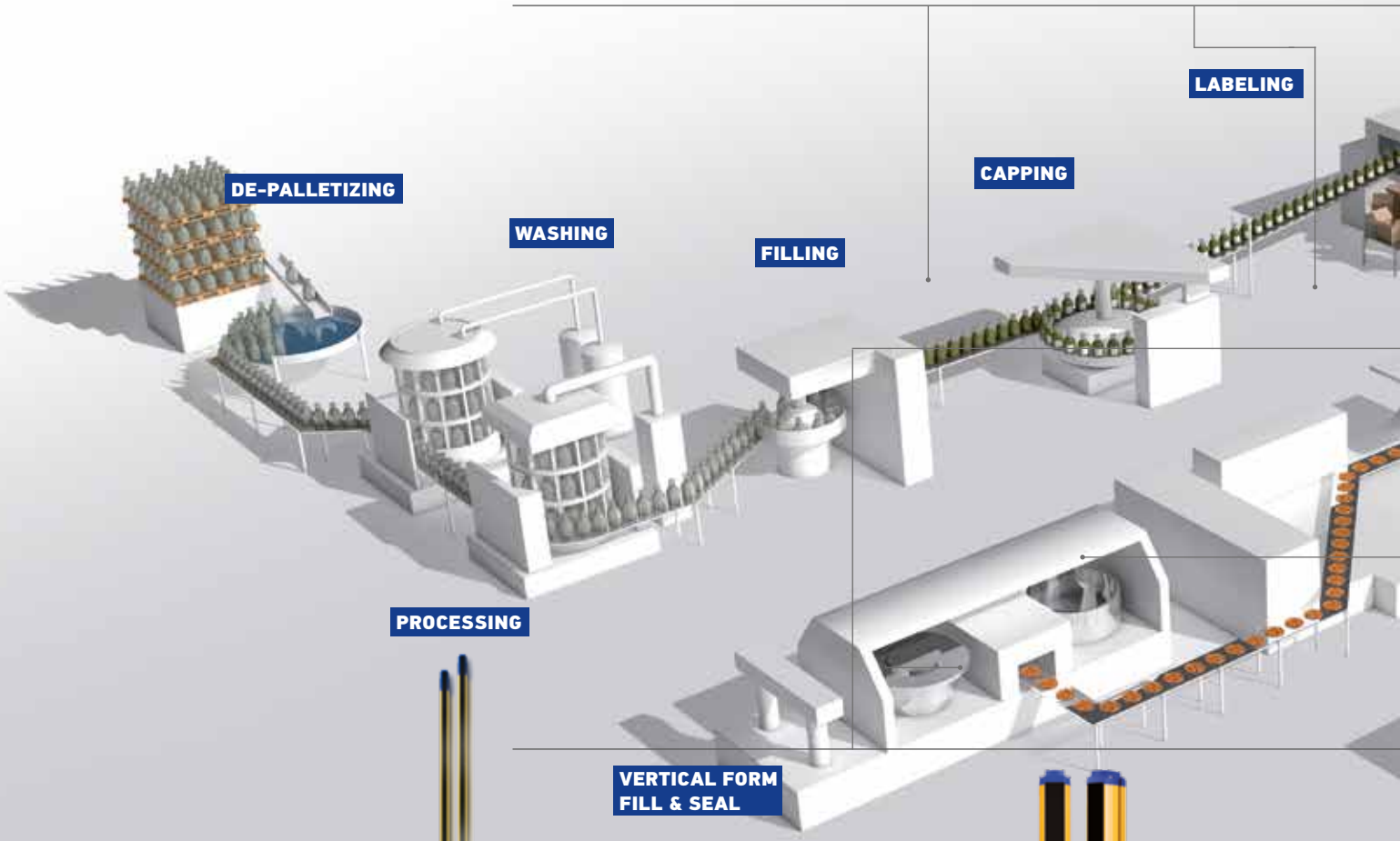

Advanced light curtains for finger and hand protection where blanking or muting are required

Safety light curtain with integrated openSAFETY over POWERLINK

Applications

- De-Palletizing
- Washing
- Filling
- Capping
- Labeling
- Case Packing
- Stretch-wrapping
- Palletizing
- Storage & Retrieval
- Cartoning
- Wrapping
- Vertical Form Fill & Seal
- Processing

Datalogic has more than 40 years of experience in the sensors and safety sector, developing their first product, a **Photoelectric Sensor**, in 1972. Today, Datalogic is one of the largest manufacturers of sensor and safety products worldwide.

Datalogic is the market leader in Italy for photoelectric sensors and safety light curtains, ranking among the **top-10 manufacturers** in Europe by market share.

Datalogic's **Sensors and Safety** portfolio solves customer applications in **Factory Automation**, specializing in Processing and Packaging machinery, and Automated Material Handling Systems related to manufacturing industries such as Automotive, Electronics, Pharmaceutical, Food & Beverage, Paper and Printing, Wood-working, Ceramics, Glass, and Textiles.

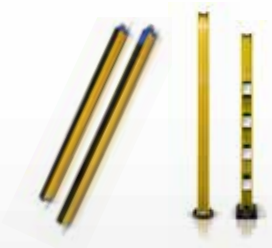

Long distance light curtains, stands and mirrors for perimetral protection

Operator interfaces to control light curtains and indicate muting status

Safety laser scanner for area protection

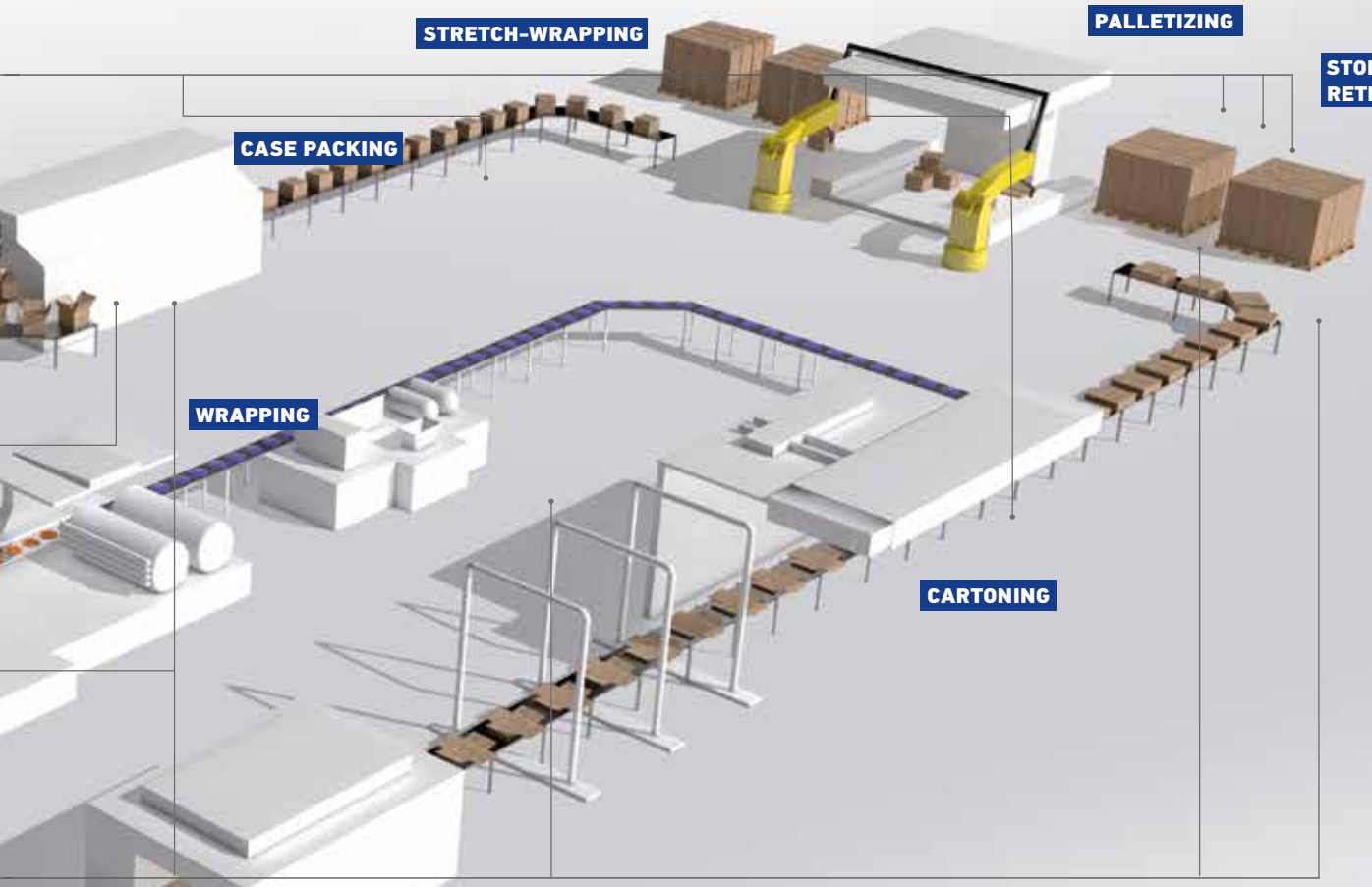

Finger or hand protection light curtain to reach close distance to the working point

Safety Light curtains for body protection with Muting function

SAFETY PRODUCT RANGE

SAFETY PRODUCT RANGE

Safety Light Curtains Type 2 and Type 4

- High / Low Resolution
- Finger protection
- Hand protection
- Body protection
- Presence control
- Base / Extended Functionalities
- Auto / Man restart
- Ext device monitoring
- Muting
- Override
- Blanking
- Cascadable

Safety Laser Scanner

- Stand Alone
- Master/Slave

other safety products

- Controller
- Light beam
- Module
- Relay unit
- Accessories

INDEX

SELECTION GUIDE 6

SELECTION GUIDE 6
- Performance level (pl)
- Type
- Detection capability (or resolution)
- Detection zone
- Retroreflective light curtains
- Cascading
- Response time
- Manual or automatic restart
- External device monitoring (edm)
- Muting
- Override
- Blanking
- Software configuration

SELECTION TABLE 14

SAFETY LIGHT CURTAINS 16

SG2 BASE 18
SG2 EXTENDED
SG4 BASE

SG4-H 24

SLIM..... 28

SG BODY COMPACT BASE 34
SG BODY COMPACT MUTING

SG BODY BIG BASE 40
SG BODY BIG MUTING

SG BODY REFLECTOR BASE 46
SG BODY REFLECTOR MUTING

SG2 MUTING 54
SG4 EXTENDED

SG4 FIELDBUS 60

SINGLE BEAM SAFETY SENSORS 66
SAFETY CONTROL UNITS

SAFETY LASER SCANNER 70

LASER SENTINEL..... 72

Information in this publication is provided to guide customers in the choice of products in DATALOGIC portfolio. It has to be considered indicative and concise. For the correct use of safety components described, please always refer to additional information you can find on products datasheets and manuals, as well as to the legislation in force at the moment and in the country of their use.

You can find more detailed informations (manuals and datasheets) about products described in this reference guide on the DATALOGIC website (www.datalogic.com).

ACCESSORIES 82

BRACKETS. 84
- Metal angled brackets
- Plastic angled brackets
- Cascade brackets
- Rear brackets
- Rotative brackets
- Safety Laser Scanner brackets

MIRRORS AND STANDS 92
- Stands with adjustable mirrors
- Mirrors
- Single beam mirror
- Stands
- Mounting kits for mirrors

ACCESSORIES FOR MUTING 98
- Muting arms, brackets, cables
- Muting lamps

SG-M 102
- SG-M muting kit, SG-M connection box SG-M-ARM, SG-M bracket

SAFETY UNITS AND INTERFACES 110
- Connection boxes

OTHER ACCESSORIES. 114
- Protection tubes
- Lens shields
- Laser pointer
- Communication interface
- Test pieces

APPENDIX 120

SAFETY STANDARDS REFERENCE LIST 122
DEFINITIONS 123
SAFETY DISTANCE CALCULATION 124

SAFETY LIGHT CURTAINS SELECTION GUIDE

The selection of safety sensors for use in machinery is part of the overall risk reduction process, which starts with the analysis and evaluation of all possible risks the machine presents and ends with the validation and testing of the safety system. The sensors chosen should fulfill any safety requirements specific to the machine they will be mounted on. If there are no machine-specific requirements, the safety system should be designed to comply with all general safety and health standards. The overall system design dictates the parameters the safety sensors must meet. The following list of parameters and functions related to safety sensors can serve as a checklist to help in the selection process.

N.	DEFINITION	VALUES				
1	Performance level required	a	b	c	d	e
2	Type	2			4	
3	DETECTION CAPABILITY					
	Finger protection	14 mm				
	Hand protection	14 mm	24 mm	30 mm	34 mm	
	Arm protection/Presence				50 mm	90 mm
	Body protection	2 beams 500 mm		3 beams 800 mm	4 beams 900 mm	4 beams 1200 mm
4	DETECTION ZONE					
	Height	from 150 mm to 1800 mm				
	Operating range	from 0.2 m to 60 m				
	Zero dead zone	yes			no	
5	Retroreflective light curtains	yes			no	
6	Cascading	yes			no	
7	Response time	from 7 ms to 33 ms				
8	Manual or automatic restart	Manual			Automatic	
9	External Device Monitoring (EDM)	yes			no	
10	MUTING					
	Type of muting	T			L	
	Integrated muting lamp	yes			no	
	Partial muting	yes			no	
11	Override	yes			no	
12	BLANKING					
	Fixed Blanking	yes			no	
	Floating Blanking	yes			no	
	Reduced resolution	yes			no	
13	Software configuration	yes			no	

1. Performance level (pl) and required performance level (plr)

Performance level is one of five discrete levels (a, b, c, d, e) that specify the ability of the safety-related part of a control system to perform a specific safety function. The performance level depends on the system design, the reliability of components used, the diagnostic coverage of dangerous faults , and on the ability of the safety parts to avoid common cause and systematic faults.
The minimum required Performance Level (PLr) to reduce a risk is determined by following the diagram in fig. 1, which takes into account three factors: the severity of injury, the frequency of exposure to hazard, and the possibility to avoid the hazard. Performance level and its calculation methods are described in EN ISO 13849-1.

Fig. 1 Required Performance Level

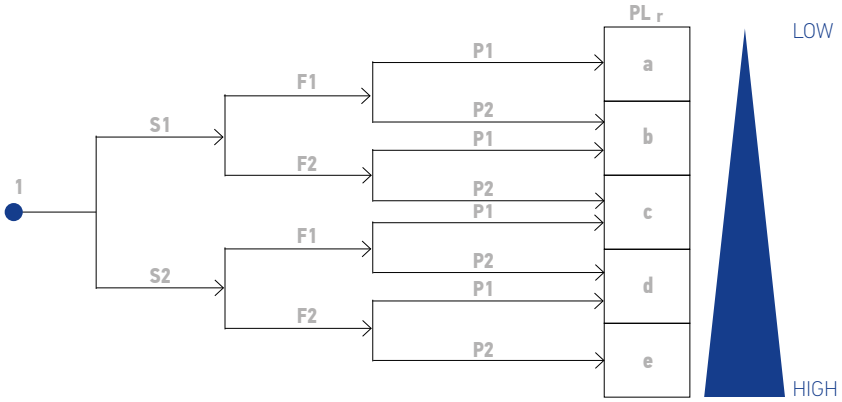

Risk parameters

S severity of injury
S1 slight (normally reversible injury)
S2 serious (normally irreversible injury or death)
F frequency and/or exposure to hazard
F1 seldom-to-less-often and/or exposure time is short
F2 frequent-to-continuous and/or exposure time is long
P possibility of avoiding hazard or limiting harm
P1 possible under specific conditions
P2 scarcely possible

2. Type

Safety sensors whose function is to detect the interruption of beams by an object are called Active Optoelectronic Protective Devices (AOPD). AOPDs are classified in two Types (Type 2 and Type 4) depending on their design and optical performance. The optical performance is dependent on the maximum limit of the effective aperture angle (EAA), that is -/+5° for Type 2, and -/+ 2.5° for Type 4. A lower EAA results in a more focused beam. Type and Performance Level are directly correlated. The maximum PL that can be reached for a safety function that includes the use of a Type 2 AOPD is PL c, while for a Type 4 AOPD, the maximum is PL e. Based on these considerations, to reduce the highest risks on machines, Type 4 AOPDs should be used (see Fig. 2). Active optoelectronic protective devices and corresponding Types are described in IEC 61496-1 and IEC 61496-2.

Fig. 2 AOPD Type and Performance Level

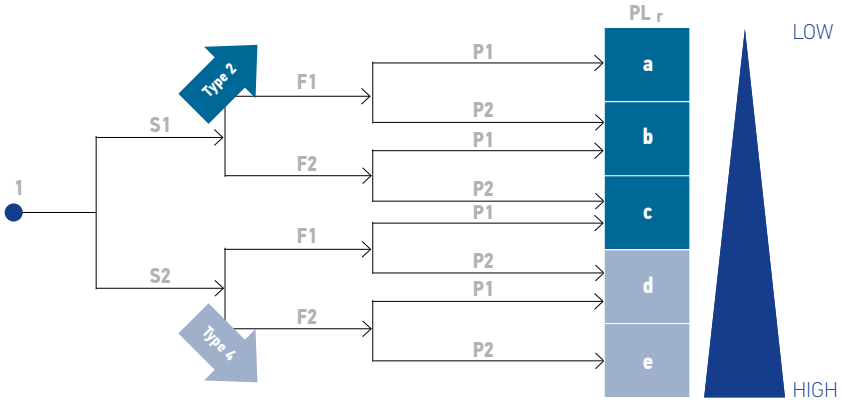

Key

1 starting point for evaluation of safety function's contribution to risk reduction
L low contribution to risk reduction
H high contribution to risk reduction
PLr required performance level

Risk parameters

S severity of injury
S1 slight (normally reversible injury)
S2 serious (normally irreversible injury or death)
F frequency and/or exposure to hazard
F1 seldom-to-less-often and/or exposure time is short
F2 frequent-to-continuous and/or exposure time is long
P possibility of avoiding hazard or limiting harm
P1 possible under specific conditions
P2 scarcely possible

3. Detection Capability (or Resolution)

The detection capability of a light curtain is the diameter of the smaller object that will activate the device when it's placed in any point of the detection zone.
The value of the detection capability, together with response time, is crucial to calculating the minimum safety distance required between the light curtain and the dangerous zone.
For single light beam sensors and for multiple light beams sensors (2, 3 or 4 beams), in place of detection capability, it's common to use the number of light beams. In this case, their purpose is to provide "body protection", detecting the passage of the entire body of a person.
For an introduction to the minimum safety distance calculation rules (described in EN 13855) see page 94 and the light curtain's technical documentation.

4. Detection zone

The detection zone is the area where any object whose dimensions are at least equal to the detection capability activates the light curtain.
It is defined by its height and by the distance between the emitter and the receiver element ("operating range").

Fig. 3 Detection Zone

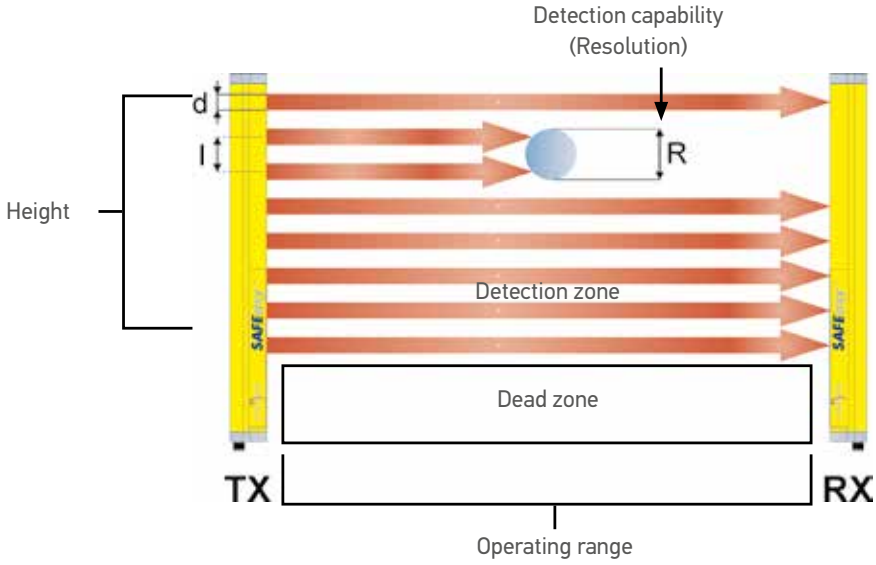

If the light curtain is retroreflective, the operating range is the distance between the active and the passive element.
Light curtains can have a "dead zone", in which they are not able to detect the object due to the absence of beams. When it is required that the dimension of the light curtain corresponds exactly to the height of its detection zone, the light curtain is said to have zero dead zone.

5. Retroreflective light curtains

2, 3 and 4 beams light curtains can be manufactured with all emitters and receivers on one side, and passive elements (mirrors) on the other side. The advantage of using a retroreflective light curtain is that only one side needs to be powered on.

Fig. 4 Retroreflective Light Curtain

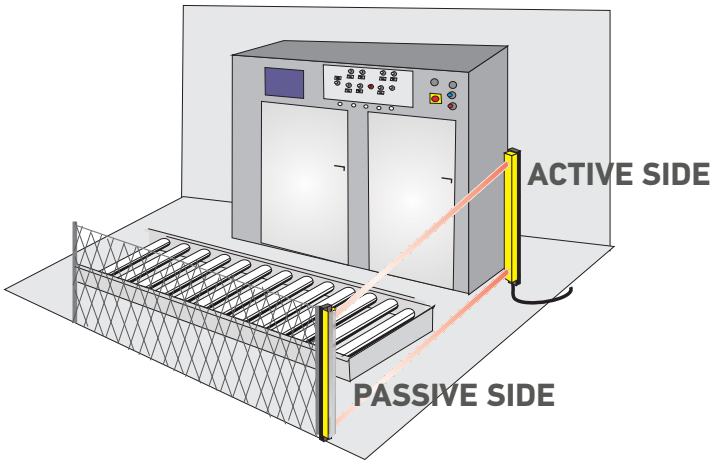

6. Cascading

Cascading is when two or more light curtains are connected to each other, resulting in one system that functions as a single light curtain. Advantages of cascading are: better monitoring of dangerous areas with presence detection beyond the vertical detection zone and space and cost savings by using a single safety unit.

Fig. 5 Cascading

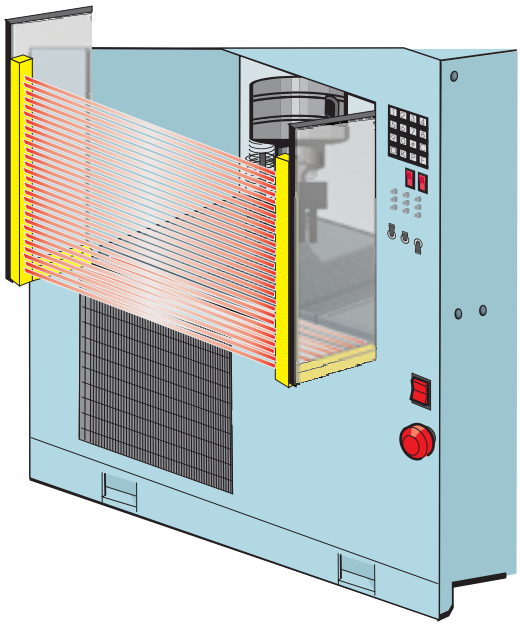

7. Response time

The response time is the maximum time occurring between the detection of the test object in the detection zone and the activation of the light curtain's outputs.
It is a safety relevant parameter, and its value must be taken in account when calculating the position in which the safety sensor will be placed in relation to the dangerous area.

8. Manual or automatic restart

Depending on the initial risk analysis of the machine, a start or restart interlock can be a safety requirement of the control system. It prevents an automatic restart of the machine during a dangerous part of the operating cycle after activation of the sensing device, or when the electrical supply of the sensor is switched on or restored after interruption.
This interlock can be implemented by a manual restart of the safety controller or by the light curtain itself.

9. External Device Monitoring (EDM)

EDM is a function that allows the electro-sensitive protective equipment (ESPE) to monitor the state of control devices (i.e. contactors, actuators) that are driven by its outputs.
This function can be achieved by the safety controller or directly by the light curtain.

Fig. 6 External Device Monitoring wiring diagram

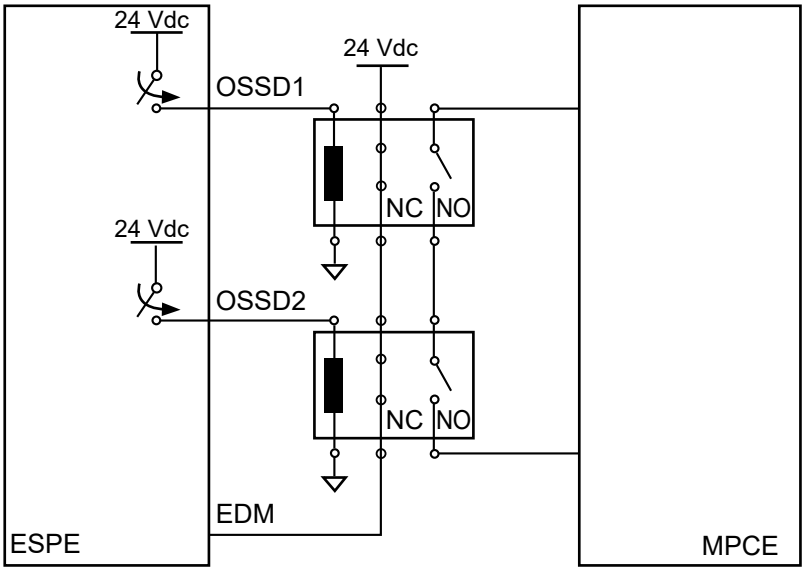

10. Muting

Muting is the temporary automatic suspension of a safety function. When a light curtain is muted, its outputs will remain ON even if an object is detected in the detection zone.

Because muting suspends a safety function, it must be implemented with all necessary precautions and in compliance with the machine-specific safety requirements.

T muting is a specific kind of muting that can be used to allow the passage of material through an opening in direction of the dangerous area or in both directions. L muting can be used only if material exits the dangerous area.

Fig. 7 Safety Light Curtain with Integrated L muting actuator

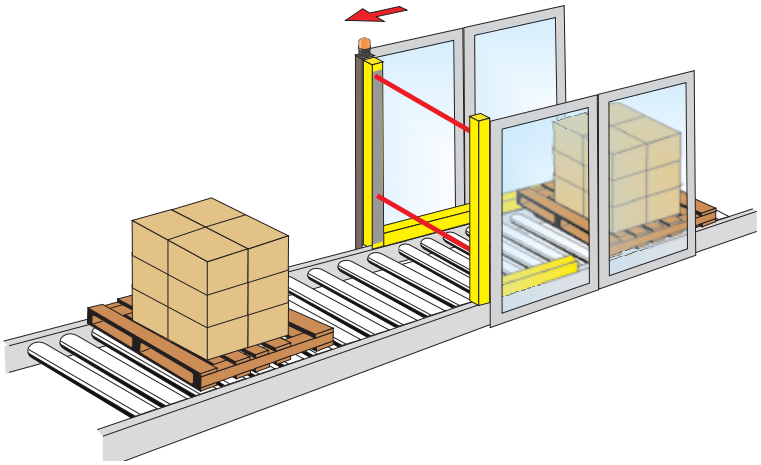

Fig. 8 Safety Light Curtain with Integrated T muting actuator

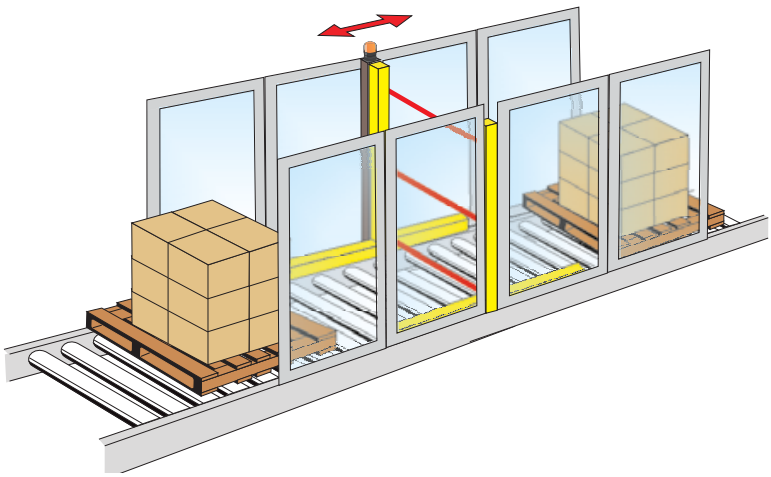

Light curtains can be provided with muting arms, with pre-wired sensors detecting the passage of material, or can be used with external muting sensors.

Fig. 9 Safety light curtain with external crossed beams muting sensors

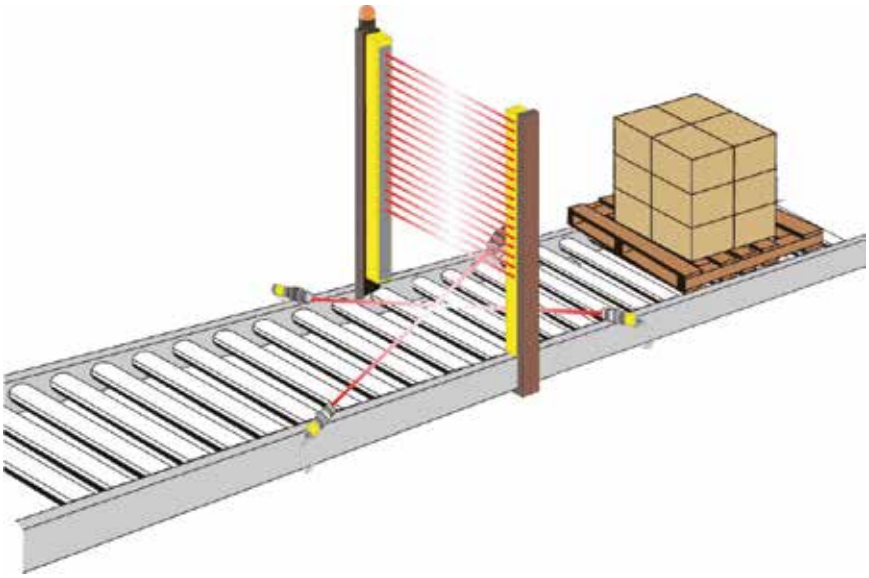

Muting lamps integrated in the light curtains, or installed external to them, are designed to flash as long as the muting is active.

Fig. 10 Integrated muting lamps

To maintain the safety of the application, light curtains can be configured to perform the muting function only on the number of beams needed for the passage of the material (Partial Muting), keeping the others active.

11. Override

Override function is a mute dependent bypass of the light curtain, that can be provided for some applications (for example conveyor and packaging machinery) in order to clear a blockage in the area of the machine where sensors are located. The activation of the bypass function should be possible for a limited amount of time, only when at least one muting sensor is activated, and will require the use of a device located where operator can see the point of hazard.

12. Blanking

The blanking function is used when an object detected in a defined part of the detection zone must not cause an OFF-state of the light curtains outputs.
Blanked beams are monitored so that the absence or a change in the size or location of the object causes the light curtain's outputs to go to the OFF-state.
Fixed blanking is when the object must remain in a fixed position, with a given tolerance.
Floating blanking is when the object can move along the detection zone.
Depending on the configuration of the light curtain, in floating blanking the object can also leave the detection zone or not.
Reduced resolution is a particular kind of floating blanking, with light curtain outputs going OFF-state only when a pre-defined number of beams adjacent are interrupted, in any position along the light curtain. When reduced resolution is active, more than one small object can interrupt the light curtain beams without its output going OFF.
Blanking can affect the detection capability of the light curtain and can result in a recalculation of the minimum safety distance.

Fig. 11 Floating blanking

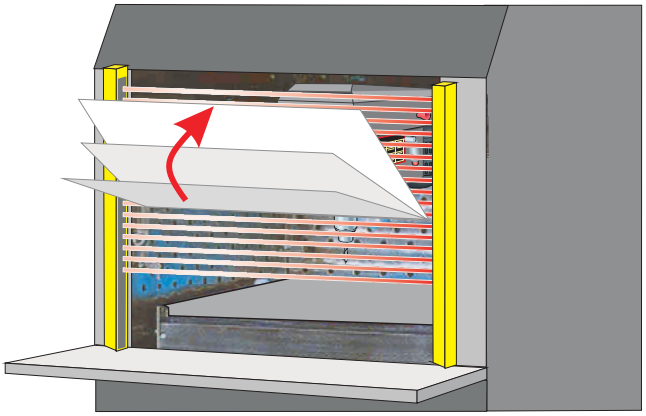

Fig. 12 Fixed blanking with tolerance

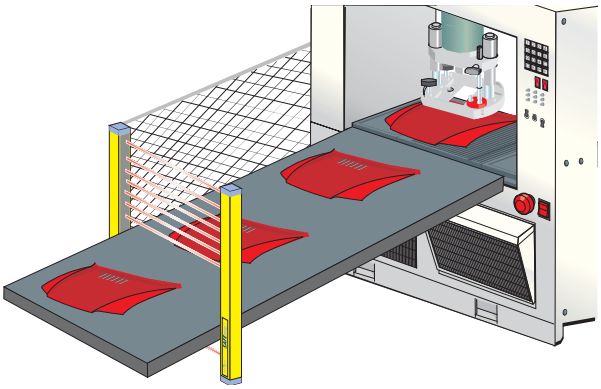

13. Software configuration

Setting DIP-Switch or through wiring, it is possible to set typical parameters like manual or auto reset, EDM enable or disable, muting type selection, as well as auto-teach blanking function.
A software configurator (Graphic User Interface, GUI) is required for more advanced functionality, such as setting the muting timeout with 1-second steps, or designing complex patterns for floating or fixed blanking.

SAFETY LIGHT CURTAINS SELECTION TABLE

Resolution (mm)	Type	Range (m)	Height (mm)
14	2/4	0.2 ... 6	150 ... 1200
	4	0.2 ... 6	150 ... 1800
		0.2 ... 7	300 ... 1800
		0.2 ... 6	150 ... 1800
		0.2 ... 6	150 ... 450
24	2/4	0.2 ... 6	150 ... 1200
30	2	0.2 ... 19	150 ... 1800
		0.2 ... 19	150 ... 1800
		0.2 ... 20	300 ... 1800
	4	0.2 ... 19	150 ... 1800
		0.2 ... 20	300 ... 1800
		0.2 ... 6	150 ... 1800
34	2/4	0.2 ... 6	150 ... 1200
40	4	6 ... 60	660/960/1260
50/90	2	0.2 ... 19	150 ... 1800
		0.2 ... 19	150 ... 1800
2/3/4 beams	2/4	0.5 ... 50	500/800/900/1200
		0.5 ... 50 0.5 ... 3* 0.5 ... 7**	500/800/900/1200
		0.5 ... 60	500/800/900/1200
		0.5 ... 60 0.5 ... 3* 0.5 ... 7**	500/800/900/1200
		0.5 ... 8	500/800/900/1200
		0.5 ... 8 0.5 ... 3*	500/800/900/1200
		0 ... 8*** 0 ... 40***	flexible
2/3/4 beams	4	0.2 ... 19	600/800/900/1200

NOTES
* With retroreflective muting arms
** With emitter / receiver muting arms
*** Depending on models
**** The safety functions have to be implemented in the safety PLC that read the status of the light curtain through openSAFETY

Functions	Additional HW features	Family	Page
Manual / Auto Restart External Device Monitoring (EDM)	Zero dead zone Cascade	SLIM	28
Manual / Auto Restart External Device Monitoring (EDM)		SG4 BASE	18
Manual / Auto Restart External Device Monitoring (EDM) T, L Muting function Partial Muting Override Fixed blanking Floating Blanking	Zero dead zone Cascade Advanced Programmable Configuration Monitoring via Ethernet/IP Error logging	SG4 EXTENDED	54
Manual / Auto Restart External Device Monitoring (EDM) T, L Muting function Partial Muting Override Fixed / floating blanking	Integrated openSAFETY over POWERLINK	SG4 FIELDBUS ****	60
Auto restart	Stainless stees housing Glass window	SG4-H (PHARMA)	24
Manual / Auto Restart External Device Monitoring (EDM)	Zero dead zone Cascade	SLIM	28
Auto restart		SG2 BASE	18
Manual / Auto Restart External Device Monitoring (EDM)		SG2 EXTENDED	18
Manual / Auto Restart External Device Monitoring (EDM) T, L Muting function Partial Muting Override	Zero dead zone	SG2 MUTING	54
Manual / Auto Restart External Device Monitoring (EDM)		SG4 BASE	54
Manual / Auto Restart External Device Monitoring (EDM) T, L Muting function Partial Muting Override Fixed blanking Floating Blanking	Zero dead zone Cascade Advanced Programmable Configuration Monitoring via Ethernet/IP Error logging	SG4 EXTENDED	54
Manual / Auto Restart External Device Monitoring (EDM) T, L Muting function Partial Muting Override Fixed / floating blanking	Integrated openSAFETY over POWERLINK	SG4 FIELDBUS ****	60
Manual / Auto Restart External Device Monitoring (EDM)	Zero dead zone Cascade	SLIM	28
Manual / Auto Restart External Device Monitoring (EDM)		SG4 LONG RANGE BASE	40
Auto restart		SG2 BASE	18
Manual / Auto Restart External Device Monitoring (EDM)		SG2 EXTENDED	18
Manual / Auto Restart External Device Monitoring (EDM)		SG BODY COMPACT BASE	34
Manual / Auto Restart External Device Monitoring (EDM) T, L Muting function Override	Integrated muting lamp Integrated muting arms***	SG BODY COMPACT MUTING	34
Manual / Auto Restart External Device Monitoring (EDM)		SG BODY BIG BASE	40
Manual / Auto Restart External Device Monitoring (EDM) T, L Muting function Override	Integrated muting lamp	SG BODY BIG MUTING	40
Manual / Auto Restart External Device Monitoring (EDM)	Retroreflective	SG BODY REFLECTOR BASE	46
Manual / Auto Restart External Device Monitoring (EDM) T, L Muting function Override	Retroreflective Integrated muting lamp Integrated mugin arms***	SG BODY REFLECTOR MUTING	46
Manual / Auto Restart External Device Monitoring (EDM) T, L Muting function Override	Double muting function Low temperature Defogging Separated control unit	SINGLE BEAM SENSORS	66
Manual / Auto Restart External Device Monitoring (EDM) T, L Muting function Override	Integrated openSAFETY over POWERLINK	SG4 FIELDBUS ****	60

SAFETY LIGHT CURTAINS

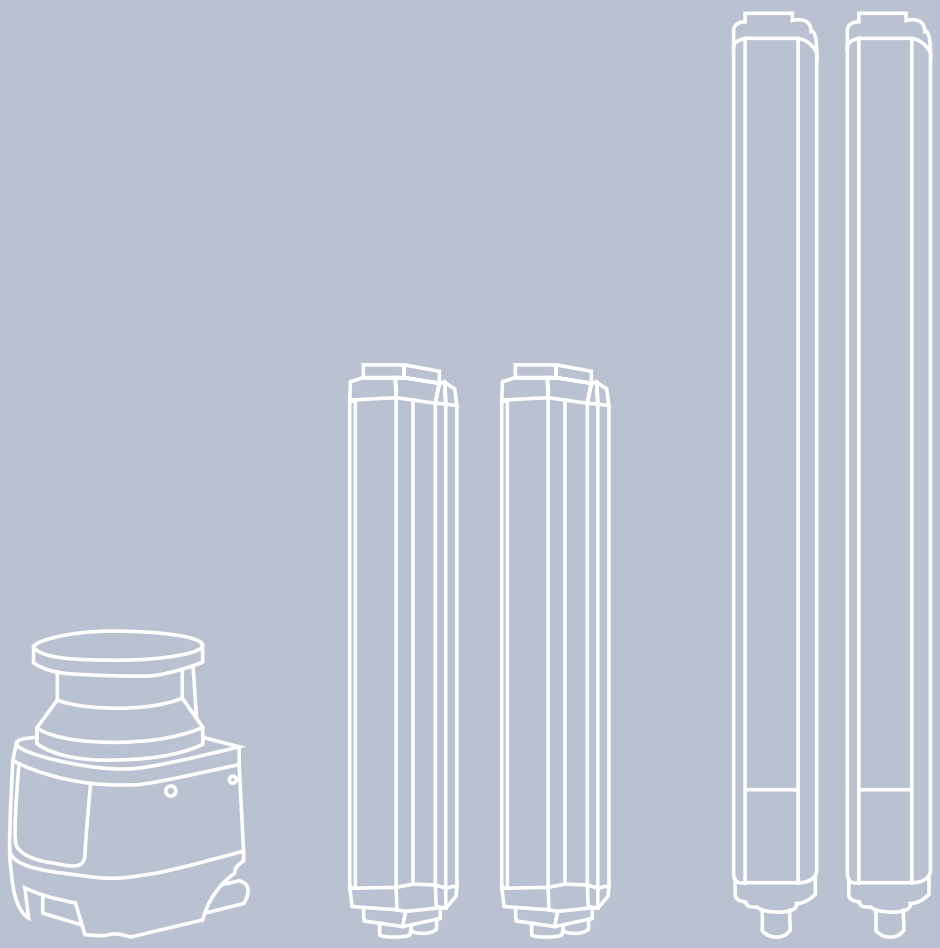

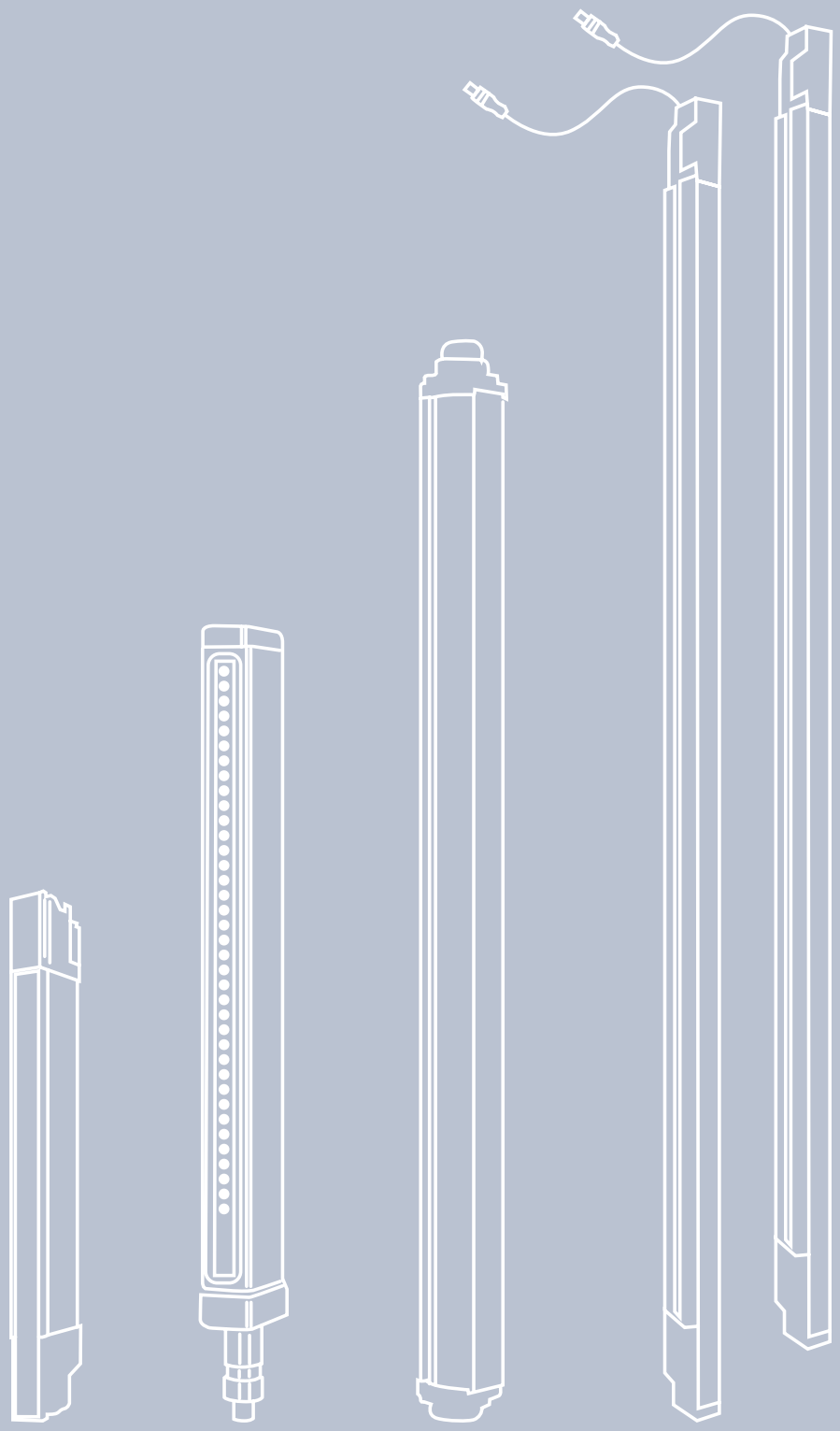

DATALOGIC
EMPOWER YOUR VISION

SG2 BASE / SG2 EXTENDED SG4 BASE

High reliability
Easy installation and alignment
Cost effective

- Finger, hand, arm detection with basic functions
- 90 mm version for presence detection
- Up to 19 m operating distance
- Compact dimensions (32.3 x 36.9 mm section)
- Anti-interfence coding
- IP65 Protection; IP69K with optional tube
- Unshielded cables
- Rotating and anti-vibration brackets

APPLICATIONS

- Automatic machines: cutting, packaging, material handling and storing.
- Automatic and semi-automatic assembling lines;
- Milling, lathe and shearing machines
- Bending and metal-working machines

INDUSTRIES

- Food & Beverage
- Textile
- Metalworking
- Ceramic
- Metal
- Automotive
- Electronics

	FINGER	HAND	ARM	BODY
Type 2		x	x	
Type 4	x	x		x

SG 2 - 30 - 015 - 00 - E

TYPE	
2	Type 2
4	Type 4

RESOLUTION	
14	Finger: 14 mm
30	Hand: 30 mm
50	Arm: 50 mm (only Type 2)
90	Arm: 90 mm (only Type 2)

MONITORED HEIGHT	
15	150 mm
30	300 mm
...	...
180	1800mm

VERSION	
E	Type4, EDM, Coded
E-C	Type2, EDM, Coded
X	Basic Function

TECHNICAL DATA

	SG2 BASE [SG2-xx-xxx-00-X]	SG2 EXTENDED [SG2-xx-xxx-00-E-C]	SG4 BASE [SG4-xx-xxx-00-X]	SG4 BASE [SG4-xx-xxx-00-E]
GENERAL DATA				
Type (EN61496-1)	2		4	
PL (EN ISO 13849-1)	c		e	
SIL (IEC 61508)	1		3	
Resolution	30 - 50 - 90 mm		14 - 30 mm	
Protected height	150 ...1800 mm (with 150 mm steps)			
Operating distance	0.2 ...19 m		0.2 ... 6 m (resolution 14 mm) 0.2 ...19 m (resolution 30 mm)	
ELECTRICAL DATA				
Power supply (Vdd)	24 Vdc ± 20			
Outputs	2 PNP			
Output current	0.5 A max / each output			
Capacitive load	2.2 uF @ 24Vdc max			
Response time	8 ... 24 ms		9 ... 50 ms	
Cables length (for power supply)	50 m max			
MECHANICAL AND ENVIRONMENTAL DATA				
Operating temperature	-10 ...+55 °C		0 ...+55 °C	
Humidity	15 ... 95 % (no condensation)			
Mechanical protection	IP 65 (EN 60529)			
Housing Material	Painted aluminium, Polycarbonate			
Window material	PMMA			
FUNCTION				
Test Input	On Receiver	On Emitter	N/A	On Emitter
Restart	Automatic	Manual / Automatic	Automatic	Manual / Automatic
EDM (External Device Monitoring)	N/A	On Receiver	N/A	On Receiver
Selectable Operating Distance	N/A	On Emitter	N/A	

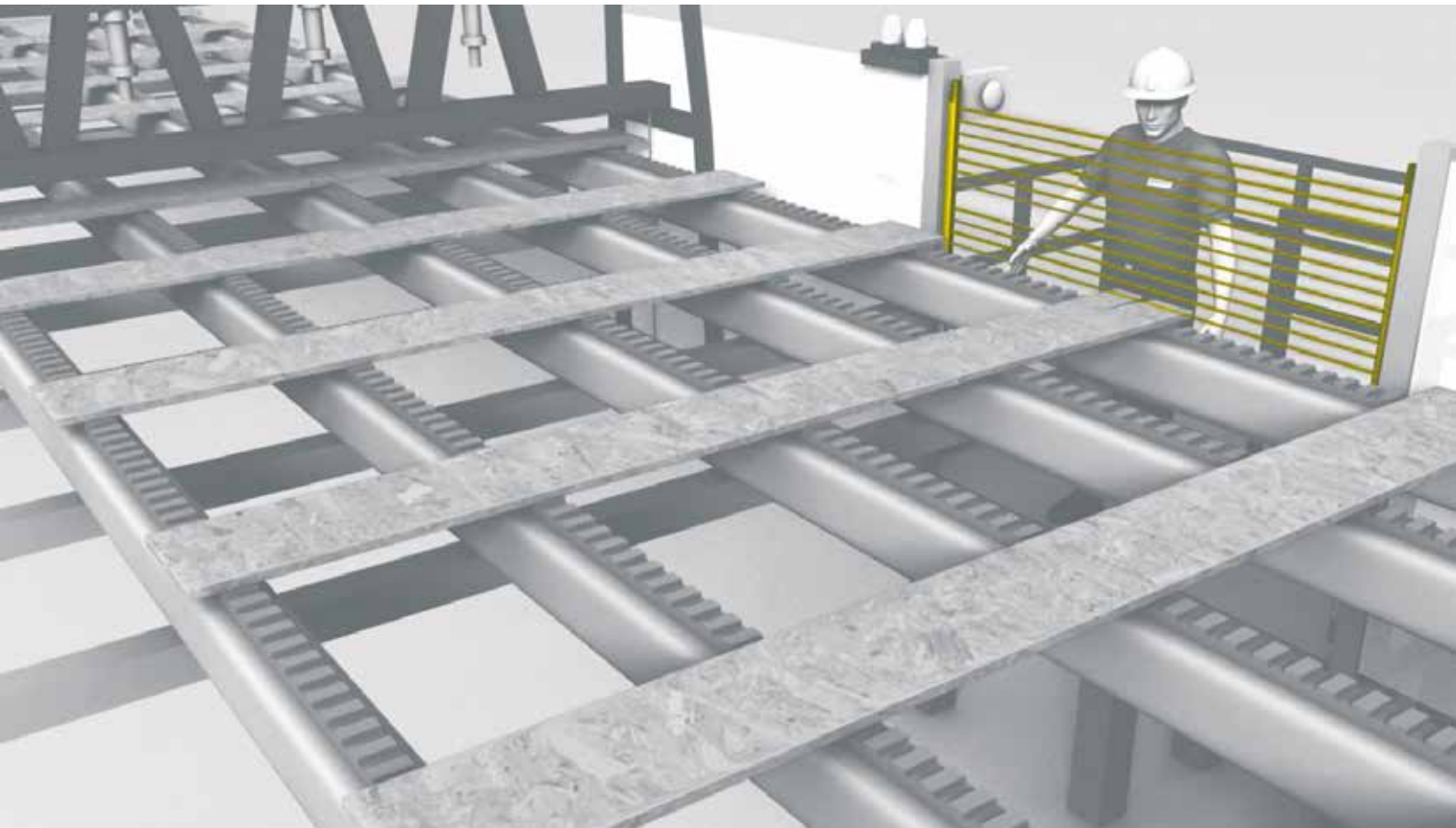

CONNECTION

	SG2 BASE [SG2-XX-XXX-00-X]	SG4 BASE [SG4-XX-XXX-00-X]
EMITTER	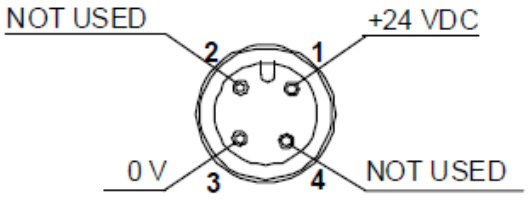	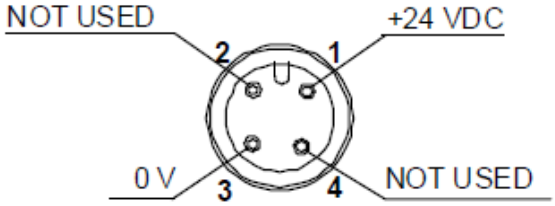
RECEIVER	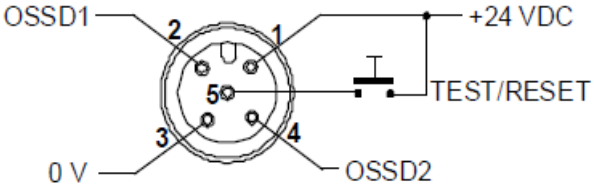	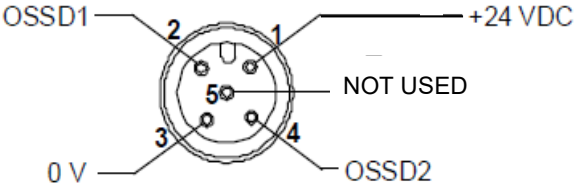

	SG2 EXTENDED [SG2-XX-XXX-00-E-C]	SG4 BASE [SG4-XX-XXX-00-E]
EMITTER	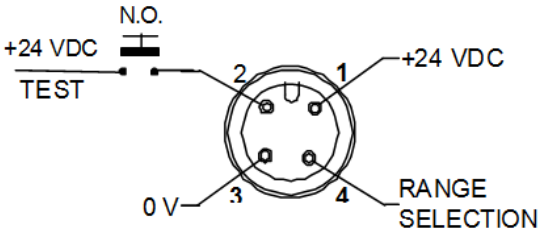	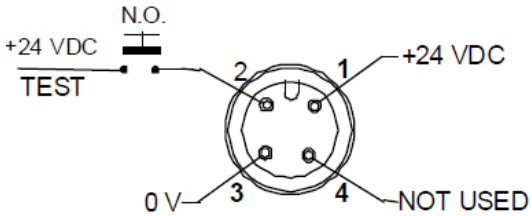
RECEIVER	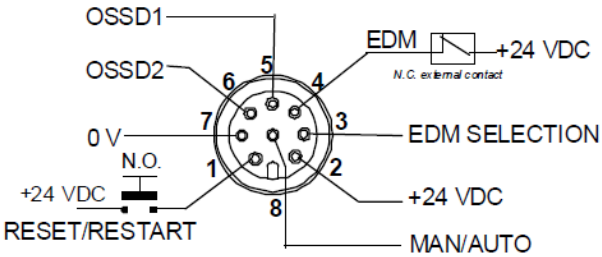	

NOTES

To set manual restart, connect Pin 8 (MAN/AUTO) with Pin 6 (OSSD2)

To deactivate EDM function, connect Rx Pin 3 to 24Vdc on Receiver

DIMENSION

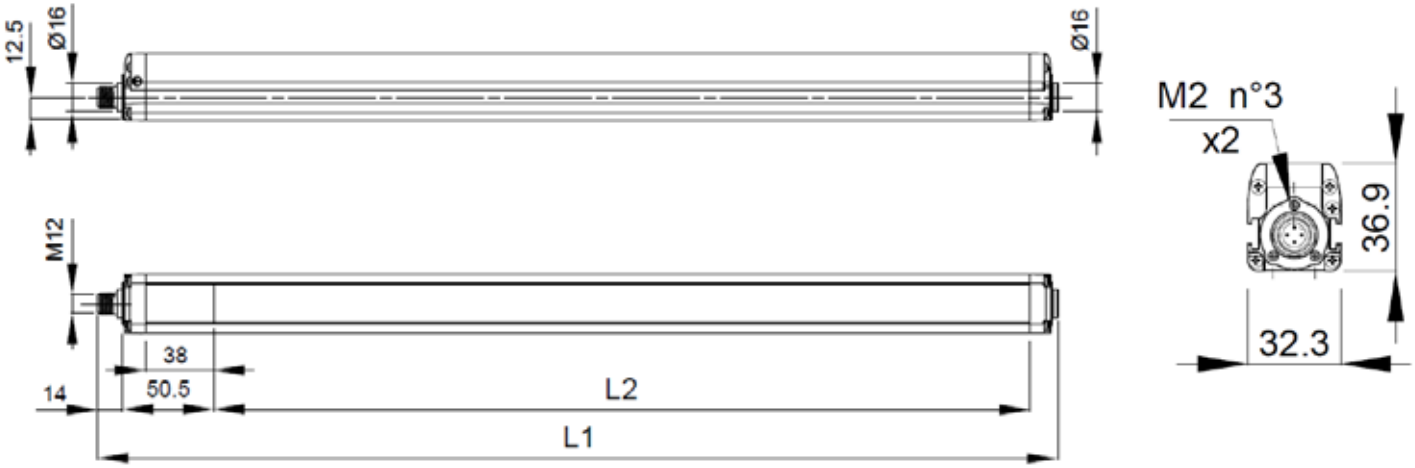

MODEL	L1 (MM)	L2 (MM)
SGx-yy-150-00-kkk	233.3	153.3
SGx-yy-030-00-kkk	383.2	303.2
SGx-yy-045-00-kkk	533.2	453.3
SGx-yy-060-00-kkk	683.2	603.2
SGx-yy-075-00-kkk	833.2	753.3
SGx-yy-090-00-kkk	983.2	903.2
SGx-yy-105-00-kkk	1133.2	1053.2
SGx-yy-120-00-kkk	1283.3	1203.3
SGx-yy-135-00-kkk	1433.2	1353.2
SGx-yy-150-00-kkk	1583.3	1503.3
SGx-yy-165-00-kkk	1733.3	1653.3
SGx-yy-180-00-kkk	1883.3	1803.3

INDICATORS

MODEL SELECTION AND ORDER INFORMATION

	SG2 BASE [SG2-XX-XXX-00-X]	ORDER CODE	SG2 EXTENDED [SG2-XX-XXX-00-E-C]	ORDER CODE	SG4-XX-XXX-00-X	ORDER CODE	SG4 BASE [SG4-XX-XXX-00-E]	ORDER CODE
FINGER PROTECTION	---	---	---	---	SG4-14-015-00-X	957901460	SG4-14-015-00-E	957901000
	---	---	---	---	SG4-14-030-00-X	957901470	SG4-14-030-00-E	957901010
	---	---	---	---	SG4-14-045-00-X	957901480	SG4-14-045-00-E	957901020
	---	---	---	---	SG4-14-060-00-X	957901490	SG4-14-060-00-E	957901030
	---	---	---	---	SG4-14-075-00-X	957901500	SG4-14-075-00-E	957901040
	---	---	---	---	SG4-14-090-00-X	957901510	SG4-14-090-00-E	957901050
	---	---	---	---	SG4-14-105-00-X	957901520	SG4-14-105-00-E	957901060
	---	---	---	---	SG4-14-120-00-X	957901530	SG4-14-120-00-E	957901070
	---	---	---	---	SG4-14-135-00-X	957901540	SG4-14-135-00-E	957901080
	---	---	---	---	SG4-14-150-00-X	957901550	SG4-14-150-00-E	957901090
	---	---	---	---	SG4-14-165-00-X	957901560	SG4-14-165-00-E	957901100
	---	---	---	---	SG4-14-180-00-X	957901570	SG4-14-180-00-E	957901110
HAND PROTECTION	SG2-30-015-00-X	957801000	SG2-30-015-00-E-C	957801340	SG4-30-015-00-X	957901690	SG4-30-015-00-E	957901120
	SG2-30-030-00-X	957801010	SG2-30-030-00-E-C	957801350	SG4-30-030-00-X	957901580	SG4-30-030-00-E	957901130
	SG2-30-045-00-X	957801020	SG2-30-045-00-E-C	957801360	SG4-30-045-00-X	957901590	SG4-30-045-00-E	957901140
	SG2-30-060-00-X	957801030	SG2-30-060-00-E-C	957801370	SG4-30-060-00-X	957901600	SG4-30-060-00-E	957901150
	SG2-30-075-00-X	957801040	SG2-30-075-00-E-C	957801380	SG4-30-075-00-X	957901610	SG4-30-075-00-E	957901160
	SG2-30-090-00-X	957801050	SG2-30-090-00-E-C	957801390	SG4-30-090-00-X	957901620	SG4-30-090-00-E	957901170
	SG2-30-105-00-X	957801060	SG2-30-105-00-E-C	957801400	SG4-30-105-00-X	957901630	SG4-30-105-00-E	957901180
	SG2-30-120-00-X	957801070	SG2-30-120-00-E-C	957801410	SG4-30-120-00-X	957901640	SG4-30-120-00-E	957901190
	SG2-30-135-00-X	957801080	SG2-30-135-00-E-C	957801420	SG4-30-135-00-X	957901650	SG4-30-135-00-E	957901200
	SG2-30-150-00-X	957801090	SG2-30-150-00-E-C	957801430	SG4-30-150-00-X	957901660	SG4-30-150-00-E	957901210
	SG2-30-165-00-X	957801100	SG2-30-165-00-E-C	957801440	SG4-30-165-00-X	957901670	SG4-30-165-00-E	957901220
	SG2-30-180-00-X	957801110	SG2-30-180-00-E-C	957801450	SG4-30-180-00-X	957901680	SG4-30-180-00-E	957901230
PRESENCE / ARM DETECTION	SG2-50-030-00-X	957801120	SG2-50-030-00-E-C	957801460	---	---	---	---
	SG2-50-045-00-X	957801130	SG2-50-045-00-E-C	957801470	---		---	---
	SG2-50-060-00-X	957801140	SG2-50-060-00-E-C	957801480	---	---	---	---
	SG2-50-075-00-X	957801150	SG2-50-075-00-E-C	957801490	---	---	---	---
	SG2-50-090-00-X	957801160	SG2-50-090-00-E-C	957801500	---	---	---	---
	SG2-50-105-00-X	957801170	SG2-50-105-00-E-C	957801510	---	---	---	---
	SG2-50-120-00-X	957801180	SG2-50-120-00-E-C	957801520	---	---	---	---
	SG2-50-135-00-X	957801190	SG2-50-135-00-E-C	957801530	---	---	---	---
	SG2-50-150-00-X	957801200	SG2-50-150-00-E-C	957801540	---	---	---	---
	SG2-50-165-00-X	957801210	SG2-50-165-00-E-C	957801550	---	---	---	---
	SG2-50-180-00-X	957801220	SG2-50-180-00-E-C	957801560	---	---	---	---
	SG2-90-030-00-X	957801230	SG2-90-030-00-E-C	957801570	---	---	---	---
	SG2-90-045-00-X	957801240	SG2-90-045-00-E-C	957801580	---	---	---	---
	SG2-90-060-00-X	957801250	SG2-90-060-00-E-C	957801590	---	---	---	---
	SG2-90-075-00-X	957801260	SG2-90-075-00-E-C	957801600	---	---	---	---
	SG2-90-090-00-X	957801270	SG2-90-090-00-E-C	957801610	---	---	---	---
	SG2-90-105-00-X	957801280	SG2-90-105-00-E-C	957801620	---	---	---	---
	SG2-90-120-00-X	957801290	SG2-90-120-00-E-C	957801630	---	---	---	---
	SG2-90-135-00-X	957801300	SG2-90-135-00-E-C	957801640	---	---	---	---
	SG2-90-150-00-X	957801310	SG2-90-150-00-E-C	957801650	---	---	---	---
	SG2-90-165-00-X	957801320	SG2-90-165-00-E-C	957801660	---	---	---	---
	SG2-90-180-00-X	957801330	SG2-90-180-00-E-C	957801670	---	---	---	---

CABLES

	POLES	TRANSMITTER CABLE	LENGTH (M)	ORDER CODE
SG2 BASE [SG2-xx-xxx-00-X] SG2 EXTENDED [SG2-xx-xxx-00-E-C] SG4 BASE [SG4-xx-xxx-00-X] [SG4-xx-xxx-00-E]	4	CS-A1-02-U-03	3	95ASE1120
		CS-A1-02-U-05	5	95ASE1130
		CS-A1-02-U-10	10	95ASE1140
		CS-A1-02-U-15	15	95ASE1150
		CS-A1-02-U-25	25	95ASE1160
		RECEIVER CABLE	**LENGTH (M)**	**ORDER CODE**
SG4 BASE [SG4-xx-xxx-00-X]	4	CS-A1-02-U-03	3	95ASE1120
		CS-A1-02-U-05	5	95ASE1130
		CS-A1-02-U-10	10	95ASE1140
		CS-A1-02-U-15	15	95ASE1150
SG2 BASE [SG2-xx-xxx-00-X]	5	CS-A1-03-U-03	3	95ASE1170
		CS-A1-03-U-05	5	95ASE1180
		CS-A1-03-U-10	10	95ASE1190
		CS-A1-03-U-15	15	95ASE1200
		CS-A1-03-U-25	25	95ASE1210
SG2 EXTENDED [SG2-xx-xxx-00-E-C] SG4 BASE [SG4-xx-xxx-00-E]	8	CS-A1-06-U-03	3	95ASE1220
		CS-A1-06-U-05	5	95ASE1230
		CS-A1-06-U-10	10	95ASE1240
		CS-A1-06-U-15	15	95ASE1250
		CS-A1-06-U-25	25	95ASE1260

NOTE
All cables have axial connectors

ACCESSORIES

	SG2 BASE [SG2-xx-xxx-00-X]	SG2 EXTENDED [SG2-xx-xxx-00-E-C]	SG4 BASE [SG4-xx-xxx-00-X]	SG4 BASE [SG4-xx-xxx-00-E]
BRACKETS				
Standard angled brackets	ST-KSTD (outfit for SG2 Base and SG4 Base)			
Rotating brackets	ST-K4ROT (outfit for SG2 Extended)			
Antivibration support (4 pcs / 6 pcs)*	ST-K4AV ST-K6AV			
Plastic brackets (4 pcs / 6 pcs)*	ST-KP4MP ST-KP6MP			
PROTECTION TUBES AND STANDS				
IP67/IP69K Tubes	SG-IP69K series			
Protective Stands	SG-PSB series			
Stand Plate for SG-PSB	SG-P			
Protective Stands Mounting Brackets (4 pcs / 6 pcs)*	ST-PS4-SG-SE ST-PS6-SG-SE			
Floor Columns	SE-S Series			
MIRRORS				
Deviating Mirrors	SG-DM Series			
Deviating Mirrors mounting kit for SG-PSB	ST-PS-DM			
Mirror Mounting Bracket	ST-DM			
SAFETY UNITS				
Safety Unit	SE-SR2			
EDM Relay Box**	-----	CS ME-03VU24-Y14	-----	CS ME-03VU24-Y14
Safety control unit for single beams and SLC	SG-BWS-T4-MT			
ALIGNMENT TOOL				
LASER Pointer	SG-LP			

NOTES
* Use 6 brackets for light curtains with length >= 1200 mm
** When using EDM Relay Box or Muting connection box, connect EDM input, and be sure EDM function is active on the safety light curtain
For accessories part number, please refer to Safety Reference Guide

Rev. 07, 05/2020

DATALOGIC PRODUCT OFFERING

Sensors

Hand Held scanners

Mobile Computers

Laser Marking Systems

Vision Systems

Stationary Industrial Scanners

Safety Laser Scanner

RFID Systems

The company endeavours to continuously improve and renew its products; for this reason the technical data and contents of this catalogue may undergo variations without prior notice. For correct installation and use, the company can guarantee only the data indicated in the instruction manual supplied with the products.

SG4-H

DATALOGIC

Stainless steel housing
Hygienic design
No need for additional protection tubes

- IP69K full protection
- Housing: AISI316L stainless steel with roughness under 0.8 micron
- Window: Optical glass
- Rounded surfaces with no gaps or sharp edges
- No labels: All information laser marked
- Maximum safety: Type 4, finger resolution
- Three protection heights: 150, 300 and 450 mm
- 50 x 30 mm profile
- 4 LEDs and 7-segment display alignment aiding

APPLICATIONS

- Primary packaging and filling machinery
  Liquid aseptic processing: syringe filling
- Solid dose processing: tablet blistering
- RABS (Restricted Access Barrier Systems)

INDUSTRIES

- Pharmaceutical Industry

	FINGER	HAND	ARM	BODY
Type 2				
Type 4	x			

SG4-H14-01 -00-X-B

TYPE	
4	Type 4

RESOLUTION	
14	Finger: 14 mm

MONITORED HEIGHT	
015	150 mm
030	300 mm
045	450 mm

FUNCTIONAL VERSION	
X	Only Auto-restart, no EDM

MECHANICAL VERSION	
B	Mechanical fixing only at bottom
G	Top-bottom fixing

TECHNICAL DATA

SG4-H [SG4-14-xxx-00-X-B]	
GENERAL DATA	
Type (EN61496-1)	4
PL (EN ISO 13849-1)	e
SIL (IEC 61508)	3
Resolution	14 mm
Protected height	150 / 300 / 450 mm
Operating distance	0.2 ... 6 m
ELECTRICAL DATA	
Power supply (Vdd)	24 Vdc ± 20
Outputs	2 PNP, with short circuit protection
Output current	0.5 A max / each output
Capacitive load	2.2 uF @ 24Vdc max
Response time	11 / 15 / 18 ms depending on model
Cables length (for power supply)	50 m max
MECHANICAL AND ENVIRONMENTAL DATA	
Operating temperature	0 ... +55 °C
Humidity	15 ... 95 % (no condensation)
Mechanical protection	IP 65 / IP 69K
Housing material	Stainless steel AISI316L
Window material	Optical glass
FUNCTIONS	
	Automatic Restart

DIMENSIONS SG4-14-XXX-00-X-B

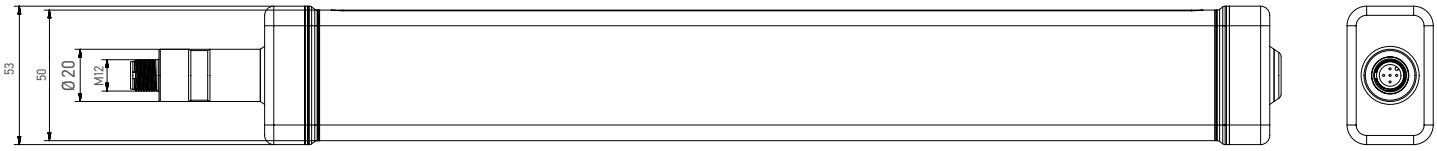

MODEL SELECTION AND ORDER INFORMATION

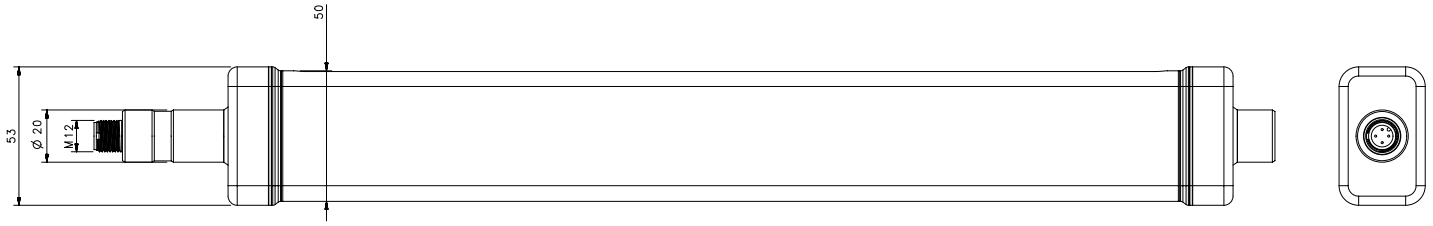

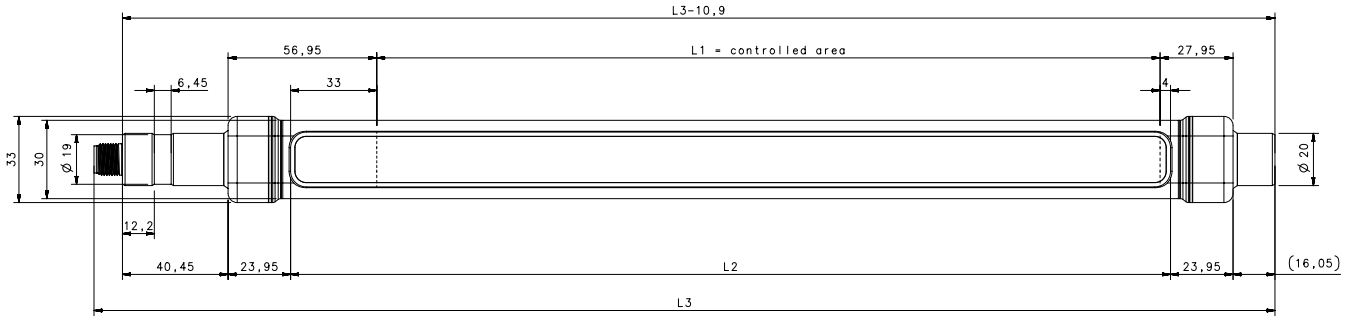

SG4-H	L1 (mm)	L2 (mm)	L3 (mm)
SG4-14-150-00-X-B	150	187	290.6
SG4-14-300-00-X-B	300	337	440.6
SG4-14-450-00-X-B	450	487	590.6
SG4-14-150-00-X-G	150	187	302.3
SG4-14-300-00-X-G	300	337	487
SG4-14-450-00-X-G	450	487	602.3

CONNECTION

EMITTER

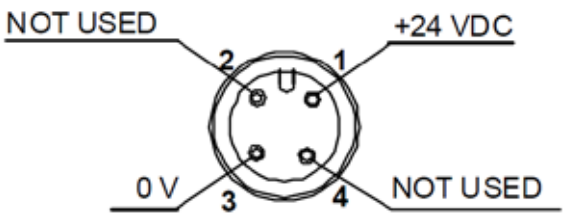

M12, 4 poles, male

1 = brown = 24Vdc
3 = blue = 0V

RECEIVER

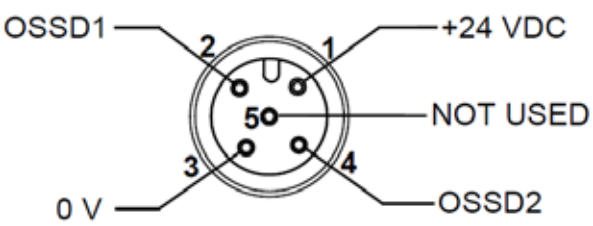

M12, 5 poles, male

1 = brown = 24Vdc
2 = white = OSSD1
3 = blue = 0V
4 = green = OSSD2

INDICATORS

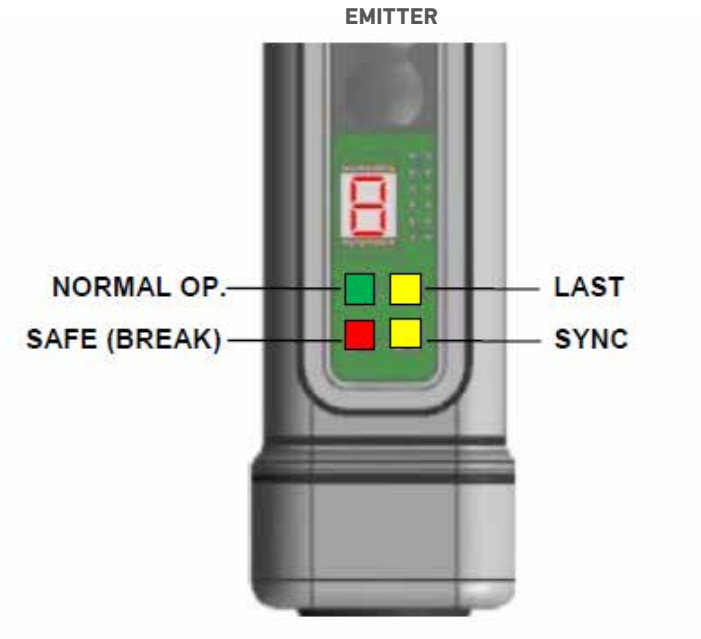

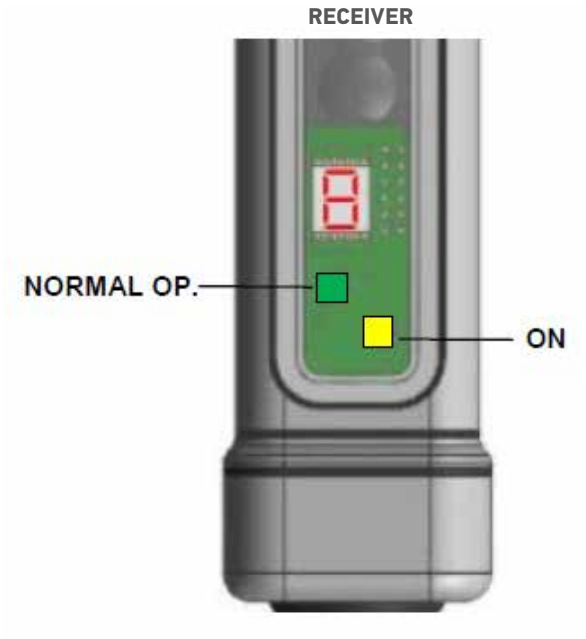

MODEL SELECTION AND ORDER INFORMATION

DESCRIPTION	ORDER No.
SG4-H14-015-00-X-B	957901760
SG4-H14-030-00-X-B	957901700
SG4-H14-045-00-X-B	957901710
SG4-H14-015-00-X-G	957902330
SG4-H14-030-00-X-G	957901720
SG4-H14-045-00-X-G	957901730

ACCESSORIES SELECTION AND ORDER INFORMATION

BRACKETS	
SG4-H-14-XXX-00-X-x is sold without brackets. Its bottom and top shape is designed to be hold by a cylindrical holder.	
MIRRORS	
Deviating Mirrors	SG-DM Series
SAFETY UNITS AND INTERFACES	
Safety Unit	SE-SR2
OTHERS	
Test Piece	TP-14

CABLES

	TRANSMITTER/RECEIVER CABLE	DESCRIPTION*	LENGTH (m)	Order code
SG4-H	CS-A1-02-U-03	M12, 4 Poles	3	95ASE1120
	CS-A1-02-U-05	M12, 4 Poles	5	95ASE1130
	CS-A1-02-U-10	M12, 4 Poles	10	95ASE1140
	CS-A1-02-U-15	M12, 4 Poles	15	95ASE1150
	CS-A1-02-U-25	M12, 4 Poles	25	95ASE1160

NOTE

* M12 connector has a fifth hole not used, in order to be compatible with 5 pins connectors

Rev. 07, 05/2020

The company endeavours to continuously improve and renew its products; for this reason the technical data and contents of this catalogue may undergo variations without prior notice. For correct installation and use, the company can guarantee only the data indicated in the instruction manual supplied with the products.

SLIM

DATALOGIC

Highest mechanical flexibility for a perfect fit into machine structures
Simple commissioning and maintenance
High functional performance

- SLIM profile: 15 x 32 mm
- Pigtail cable with 5-pole M12 connectors
- Same cable for Emitter and Receiver
- No Dead Zone
- 14, 24 and 34 mm resolution
- 34 different protection lengths, with 30 mm modularity
- 3 different brackets shapes
- Cascadable up to 3 units
- Auto/Manual restart and EDM function configuration by wiring
- LED display messages diagnosis

APPLICATIONS

- Primary packaging machinery (packing, filling, labelling, etc...)
- Cutting machinery
- Automatic assembly machines and lines
- Automatic and semi-automatic quality inspection machinery
- Material handling machinery
- Bending and metal-working machinery
- Process lines

INDUSTRIES

- Food & Beverage
- Electronics
- Automotive
- Metal working

	FINGER	HAND	ARM	BODY
Type 2	x	x		
Type 4	x	x		

SL2-14-0150-E

TYPE	
2	Type 2
4	Type 4

RESOLUTION	
14	Finger : 14 mm
24	Hand: 24 mm
34	Hand: 34 mm

MONITORED HEIGHT	
0150	150 mm
0210	210 mm
0270	270 mm
0300	300 mm
...	
1200	1200 mm

VERSION	
E	EDM, Restart

TECHNICAL DATA

	SL2 [SL2-xx-xxxx-E]	SL4 [SL4-xx-xxx-E]
	GENERAL DATA	
Type (EN61496-1)	2	4
PL (EN ISO 13849-1)	c	e
SIL (IEC 61508)	1	3
Resolution	14 - 24 - 34 mm	
Protected heights	150 210 270 ... 1200 (with 30 mm steps)	
Operating distance	0.2 ...6 m	
	ELECTRICAL DATA	
Power supply (Vdd)	24 Vdc ± 20%	
Outputs	2 PNP	
Output current	0.3 A max / each output	
Capacitive load	1 uF @ 24Vdc max	
Response time*	RT = 7 ... 17 ms (14 mm resolution) RT = 7 ... 13 ms (24 mm resolution) RT = 7 ... 15 ms (34 mm resolution) Cascade Response time (up to 3 units) <= 20ms	
Cables length (for power supply)	20 m max	
	MECHANICAL AND ENVIRONMENTAL DATA	
Operating temperature	-10 ...+55 °C	
Storage temperature	-25° ... 70°C	
Humidity	15 ... 95 % (no condensation)	
Mechanical protection	IP65 (EN 60529)	
Housing material	Painted Aluminium, Painted Zamak	
Window material	PMMA	
	FUNCTIONS	
	Manual/Automatic restart	
	External Device Monitoring (EDM)	
	Alignment mode	

NOTE

* Response time is dependent on height: for more details refer to product manual

DIMENSIONS

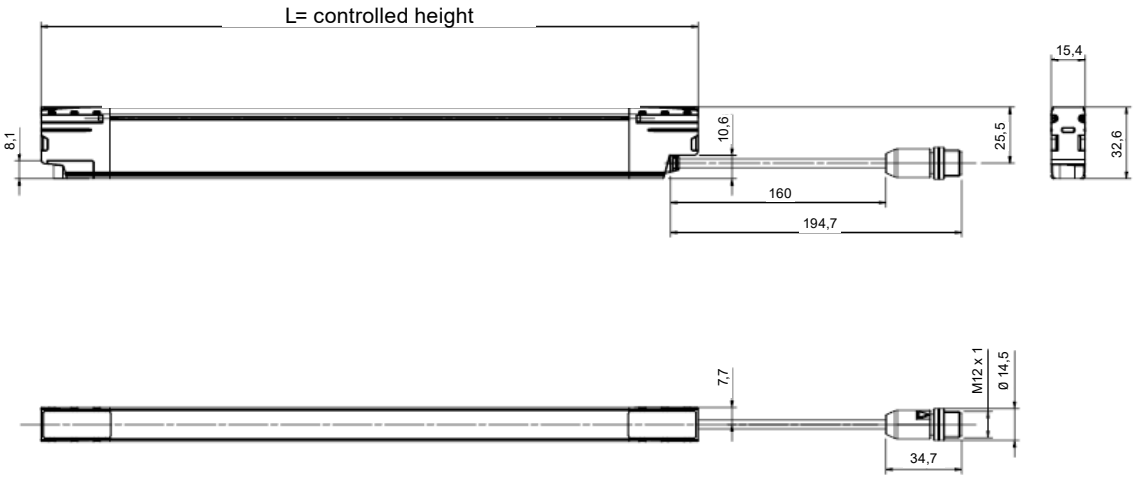

MODEL	L (mm)
SLx-yy-0150-E	150
SLx-yy-0210-E	210
SLx-yy-0270-E	270
SLx-yy-0300-E	300
SLx-yy-0330-E	330
SLx-yy-0360-E	360
SLx-yy-0390-E	390
SLx-yy-0420-E	420
SLx-yy-0450-E	450
SLx-yy-0480-E	480
SLx-yy-0510-E	510
SLx-yy-0540-E	540
SLx-yy-0570-E	570
SLx-yy-0600-E	600
SLx-yy-0630-E	630
SLx-yy-0660-E	660
SLx-yy-0690-E	690
SLx-yy-0720-E	720
SLx-yy-0750-E	750
SLx-yy-0780-E	780
SLx-yy-0810-E	810
SLx-yy-0840-E	840
SLx-yy-0870-E	870
SLx-yy-0900-E	900
SLx-yy-0930-E	930
SLx-yy-0960-E	960
SLx-yy-0990-E	990
SLx-yy-1020-E	1020
SLx-yy-1050-E	1050
SLx-yy-1080-E	1080
SLx-yy-1110-E	1110
SLx-yy-1140-E	1140
SLx-yy-1170-E	1170
SLx-yy-1200-E	1200

DIMENSIONS

OVERALL DIMENSIONS WHEN USING O-SHAPED BRACKETS

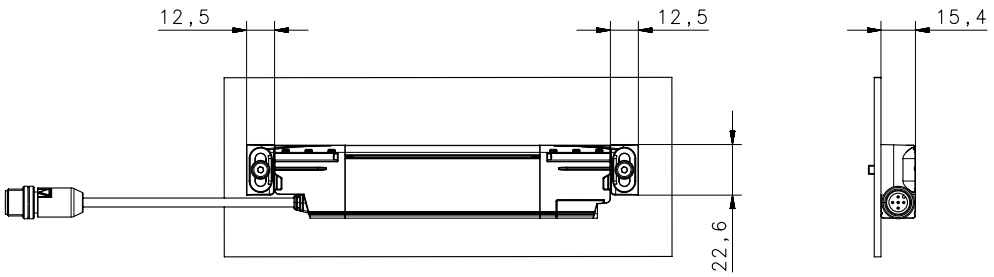

OVERALL DIMENSIONS WHEN USING C-SHAPED BRACKETS

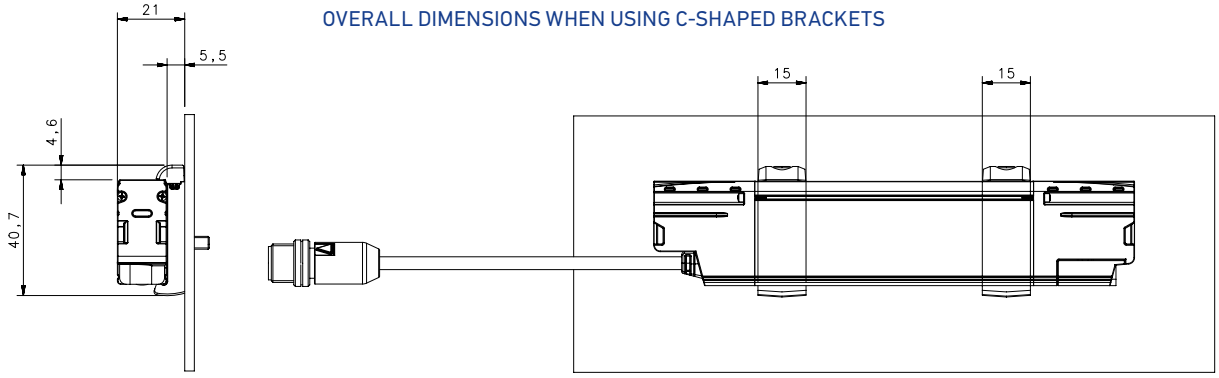

OVERALL DIMENSIONS WHEN USING L-SHAPED BRACKETS

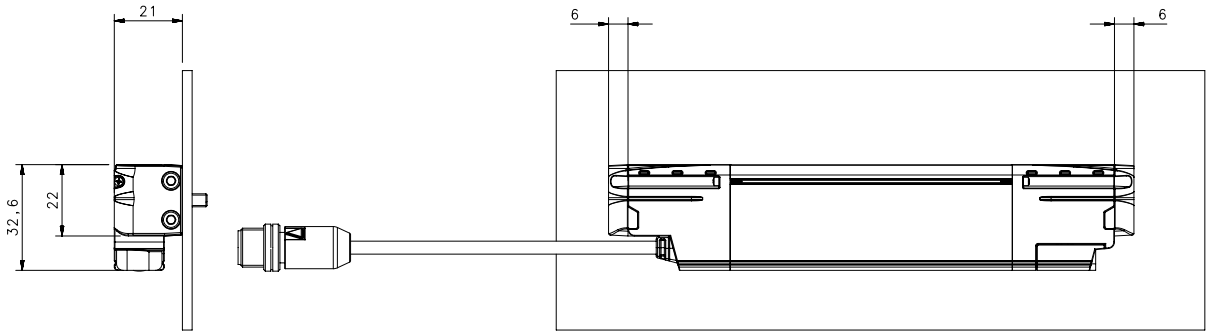

CONNECTIONS

EMITTER

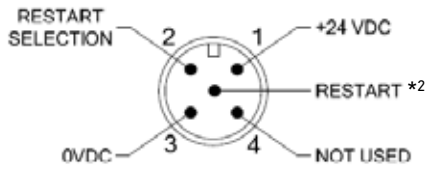

RECEIVER

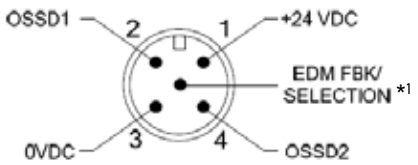

NOTES:

EDM : If connected to NC contact of a forced-guided relay, EDM function is ON; if connected to OSSD1, EDM function is OFF.

RESTART: if connected through NC contact to 24Vdc: MANUAL RESTART; if connected to RESTART SELECTION: AUTOMATIC RESTART; if left unconnected (floating): ALIGNMENT MODE.

INDICATORS

RECEIVER

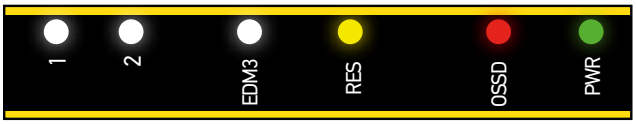

TRANSMITTER

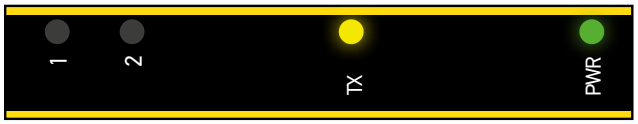

MODEL SELECTION AND ORDER INFORMATION

	FINGER PROTECTION - 14 mm RESOLUTION		HAND PROTECTION - 24 mm RESOLUTION		HAND PROTECTION - 34 mm RESOLUTION	
	SL2 [SL2-14-xxxx-E]	**Order number**	**SL2 [SL2-24-xxxx-E]**	**Order number**	**SL2 [SL2-34-xxxx-E]**	**Order number**
TYPE 2	SL2-14-0150-E	957911020	SL2-24-0150-E	957911360	SL2-34-0150-E	957911700
	SL2-14-0210-E	957911030	SL2-24-0210-E	957911370	SL2-34-0210-E	957911710
	SL2-14-0270-E	957911040	SL2-24-0270-E	957911380	SL2-34-0270-E	957911720
	SL2-14-0300-E	957911050	SL2-24-0300-E	957911390	SL2-34-0300-E	957911730
	SL2-14-0330-E	957911060	SL2-24-0330-E	957911400	SL2-34-0330-E	957911740
	SL2-14-0360-E	957911070	SL2-24-0360-E	957911410	SL2-34-0360-E	957911750
	SL2-14-0390-E	957911080	SL2-24-0390-E	957911420	SL2-34-0390-E	957911760
	SL2-14-0420-E	957911090	SL2-24-0420-E	957911430	SL2-34-0420-E	957911770
	SL2-14-0450-E	957911100	SL2-24-0450-E	957911440	SL2-34-0450-E	957911780
	SL2-14-0480-E	957911110	SL2-24-0480-E	957911450	SL2-34-0480-E	957911790
	SL2-14-0510-E	957911120	SL2-24-0510-E	957911460	SL2-34-0510-E	957911800
	SL2-14-0540-E	957911130	SL2-24-0540-E	957911470	SL2-34-0540-E	957911810
	SL2-14-0570-E	957911140	SL2-24-0570-E	957911480	SL2-34-0570-E	957911820
	SL2-14-0600-E	957911150	SL2-24-0600-E	957911490	SL2-34-0600-E	957911830
	SL2-14-0630-E	957911160	SL2-24-0630-E	957911500	SL2-34-0630-E	957911840
	SL2-14-0660-E	957911170	SL2-24-0660-E	957911510	SL2-34-0660-E	957911850
	SL2-14-0690-E	957911180	SL2-24-0690-E	957911520	SL2-34-0690-E	957911860
	SL2-14-0720-E	957911190	SL2-24-0720-E	957911530	SL2-34-0720-E	957911870
	SL2-14-0750-E	957911200	SL2-24-0750-E	957911540	SL2-34-0750-E	957911880
	SL2-14-0780-E	957911210	SL2-24-0780-E	957911550	SL2-34-0780-E	957911890
	SL2-14-0810-E	957911220	SL2-24-0810-E	957911560	SL2-34-0810-E	957911900
	SL2-14-0840-E	957911230	SL2-24-0840-E	957911570	SL2-34-0840-E	957911910
	SL2-14-0870-E	957911240	SL2-24-0870-E	957911580	SL2-34-0870-E	957911920
	SL2-14-0900-E	957911250	SL2-24-0900-E	957911590	SL2-34-0900-E	957911930
	SL2-14-0930-E	957911260	SL2-24-0930-E	957911600	SL2-34-0930-E	957911940
	SL2-14-0960-E	957911270	SL2-24-0960-E	957911610	SL2-34-0960-E	957911950
	SL2-14-0990-E	957911280	SL2-24-0990-E	957911620	SL2-34-0990-E	957911960
	SL2-14-1020-E	957911290	SL2-24-1020-E	957911630	SL2-34-1020-E	957911970
	SL2-14-1050-E	957911300	SL2-24-1050-E	957911640	SL2-34-1050-E	957911980
	SL2-14-1080-E	957911310	SL2-24-1080-E	957911650	SL2-34-1080-E	957911990
	SL2-14-1110-E	957911320	SL2-24-1110-E	957911660	SL2-34-1110-E	957912000
	SL2-14-1140-E	957911330	SL2-24-1140-E	957911670	SL2-34-1140-E	957912010
	SL2-14-1170-E	957911340	SL2-24-1170-E	957911680	SL2-34-1170-E	957912020
	SL2-14-1200-E	957911350	SL2-24-1200-E	957911690	SL2-34-1200-E	957912030

	SL4 [SL4-14-xxxx-E]	**Order number**	**SL4 [SL4-24-xxxx-E]**	**Order number**	**SL4 [SL4-34-xxxx-E]**	**Order number**
TYPE 4	SL4-14-0150-E	957910000	SL4-24-0150-E	957910340	SL4-34-0150-E	957910680
	SL4-14-0210-E	957910010	SL4-24-0210-E	957910350	SL4-34-0210-E	957910690
	SL4-14-0270-E	957910020	SL4-24-0270-E	957910360	SL4-34-0270-E	957910700
	SL4-14-0300-E	957910030	SL4-24-0300-E	957910370	SL4-34-0300-E	957910710
	SL4-14-0330-E	957910040	SL4-24-0330-E	957910380	SL4-34-0330-E	957910720
	SL4-14-0360-E	957910050	SL4-24-0360-E	957910390	SL4-34-0360-E	957910730
	SL4-14-0390-E	957910060	SL4-24-0390-E	957910400	SL4-34-0390-E	957910740
	SL4-14-0420-E	957910070	SL4-24-0420-E	957910410	SL4-34-0420-E	957910750
	SL4-14-0450-E	957910080	SL4-24-0450-E	957910420	SL4-34-0450-E	957910760
	SL4-14-0480-E	957910090	SL4-24-0480-E	957910430	SL4-34-0480-E	957910770
	SL4-14-0510-E	957910100	SL4-24-0510-E	957910440	SL4-34-0510-E	957910780
	SL4-14-0540-E	957910110	SL4-24-0540-E	957910450	SL4-34-0540-E	957910790
	SL4-14-0570-E	957910120	SL4-24-0570-E	957910460	SL4-34-0570-E	957910800
	SL4-14-0600-E	957910130	SL4-24-0600-E	957910470	SL4-34-0600-E	957910810
	SL4-14-0630-E	957910140	SL4-24-0630-E	957910480	SL4-34-0630-E	957910820
	SL4-14-0660-E	957910150	SL4-24-0660-E	957910490	SL4-34-0660-E	957910830
	SL4-14-0690-E	957910160	SL4-24-0690-E	957910500	SL4-34-0690-E	957910840
	SL4-14-0720-E	957910170	SL4-24-0720-E	957910510	SL4-34-0720-E	957910850
	SL4-14-0750-E	957910180	SL4-24-0750-E	957910520	SL4-34-0750-E	957910860
	SL4-14-0780-E	957910190	SL4-24-0780-E	957910530	SL4-34-0780-E	957910870
	SL4-14-0810-E	957910200	SL4-24-0810-E	957910540	SL4-34-0810-E	957910880
	SL4-14-0840-E	957910210	SL4-24-0840-E	957910550	SL4-34-0840-E	957910890
	SL4-14-0870-E	957910220	SL4-24-0870-E	957910560	SL4-34-0870-E	957910900
	SL4-14-0900-E	957910230	SL4-24-0900-E	957910570	SL4-34-0900-E	957910910
	SL4-14-0930-E	957910240	SL4-24-0930-E	957910580	SL4-34-0930-E	957910920
	SL4-14-0960-E	957910250	SL4-24-0960-E	957910590	SL4-34-0960-E	957910930
	SL4-14-0990-E	957910260	SL4-24-0990-E	957910600	SL4-34-0990-E	957910940
	SL4-14-1020-E	957910270	SL4-24-1020-E	957910610	SL4-34-1020-E	957910950
	SL4-14-1050-E	957910280	SL4-24-1050-E	957910620	SL4-34-1050-E	957910960
	SL4-14-1080-E	957910290	SL4-24-1080-E	957910630	SL4-34-1080-E	957910970
	SL4-14-1110-E	957910300	SL4-24-1110-E	957910640	SL4-34-1110-E	957910980
	SL4-14-1140-E	957910310	SL4-24-1140-E	957910650	SL4-34-1140-E	957910990
	SL4-14-1170-E	957910320	SL4-24-1170-E	957910660	SL4-34-1170-E	957911000
	SL4-14-1200-E	957910330	SL4-24-1200-E	957910670	SL4-34-1200-E	957911010

ACCESSORIES SELECTION AND ORDER INFORMATION

BRACKETS		ORDER NUMBER
C-shaped Brackets (included): 2 pcs kit	ST-K2-SL-C	95ASE2510
O-shaped Brackets (included): 4 pcs kit	ST-K4-SL-O	95ASE2520
L-shaped Bracktets: 2 pcs kit	ST-K2-SL-L	95ASE2540
C-shaped Orientable Brackets: 2 pcs kit	ST-K2-SL-C-OR	95ASE2530
MIRRORS		
Deviating Mirrors	SG-DM Series	See NOTE 1
Deviating Mirrors mounting kit for SG-PSB	ST-PS-DM	See NOTE 1
Mirror Mounting Bracket	ST-DM	See NOTE 1
SAFETY UNITS		
Safety Unit	SE-SR2	95ACC6170
EDM Relay Box**	CS-ME	95ASE1270
Safety control unit for single beams and SLC (with muting)	SG-BWS-T4-MT	957051010
TEST PIECES		
Test Piece 14mm L=300mm	TP-14	95ACC1630
Test Piece 24mm L=200mm	TP-24	95ASE2570
Test Piece 34mm L=200mm	TP-34	95ASE2580
NOTES		

NOTE 1 : For order numbers of these accessories refer to SAFETY REFERENCE GUIDE or to datasheets of SG-DM accessories
NOTE 2: When using EDM Relay Box or Muting connection box, connect EDM input, and be sure EDM function is active on the safety light curtain

BRACKETS

C-shaped bracket

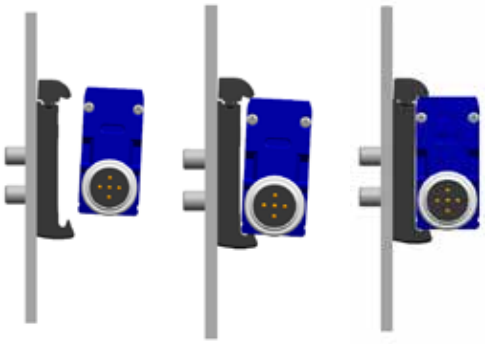

C-shaped brackets fixing

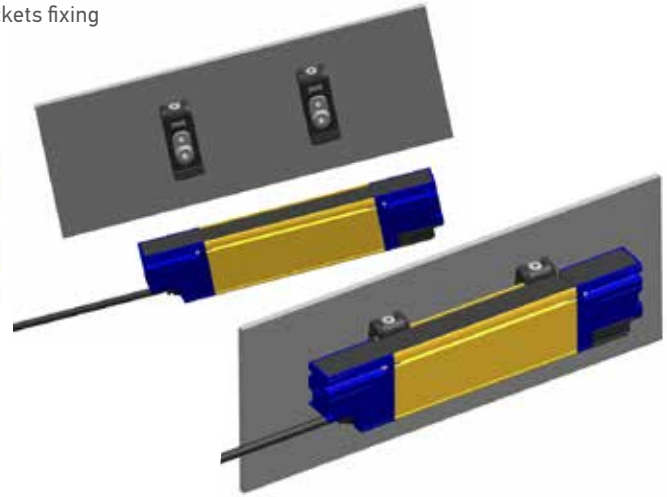

O -shaped bracket

O -shaped brackets fixing

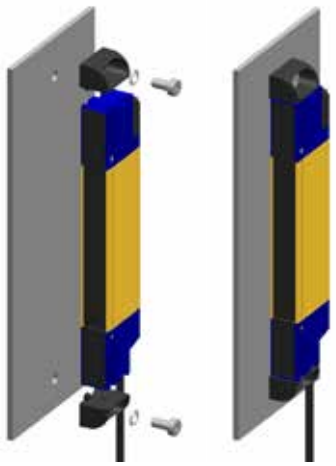

L - shaped bracket

L-shaped brackets fixing

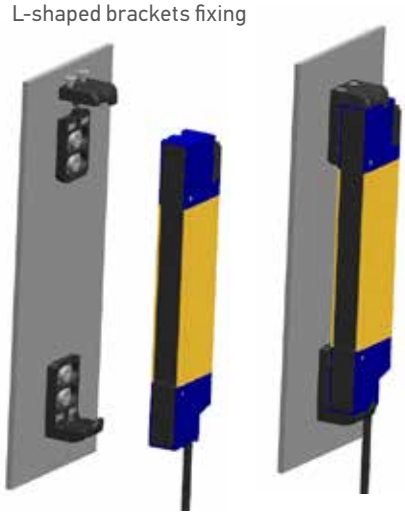

CABLES

	RECEIVER/TRANSMITTER CABLE	LENGTH (m)	Order Number
SL2/SL4 [SLx-xx-xxxx-E]	CS-A1-03-U-03	3	95ASE1170
	CS-A1-03-U-05	5	95ASE1180
	CS-A1-03-U-10	10	95ASE1190
	CS-A1-03-U-15	15	95ASE1200
	CASCADE CABLES	**LENGTH (m)**	**Order Number**
SL2/SL4 [SLx-xx-xxxx-E]	CS-H1-03-B-001	0.1	95A252950
	CS-H1-03-B-005	0.5	95ASE2550
	CS-H1-03-B-01	1	95ASE2560

NOTE

All cables have axial connectors

CASCADE CABLE DIMENSIONS

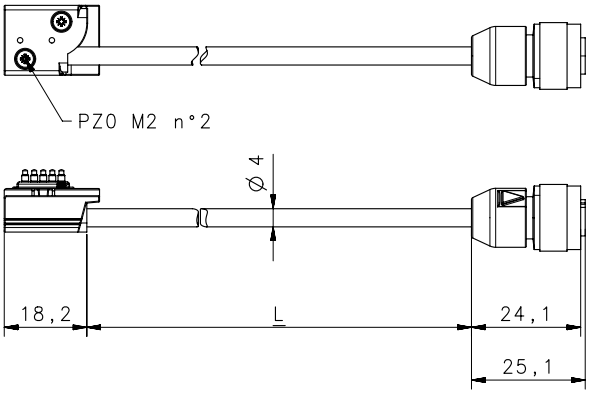

CASCADE CABLES	L -/+ 10 (mm)
CS-H1-03-B-001	90
CS-H1-03-B-005	490
CS-H1-03-B-01	990

TO CONNECT CASCADE UNIT:

Fix all cascade units with proper brackets. (1)
Remove Terminator Caps at the end of Master by loosening the two fixing screws for both emitter and receiver. (2)
Fasten the cascade cables in place of removed terminator caps, ensure all cables bend radius it's not less than 4mm. (3)
Connect Slaves M12 male connectors to M12 Female connectors from cascade cables. (4)

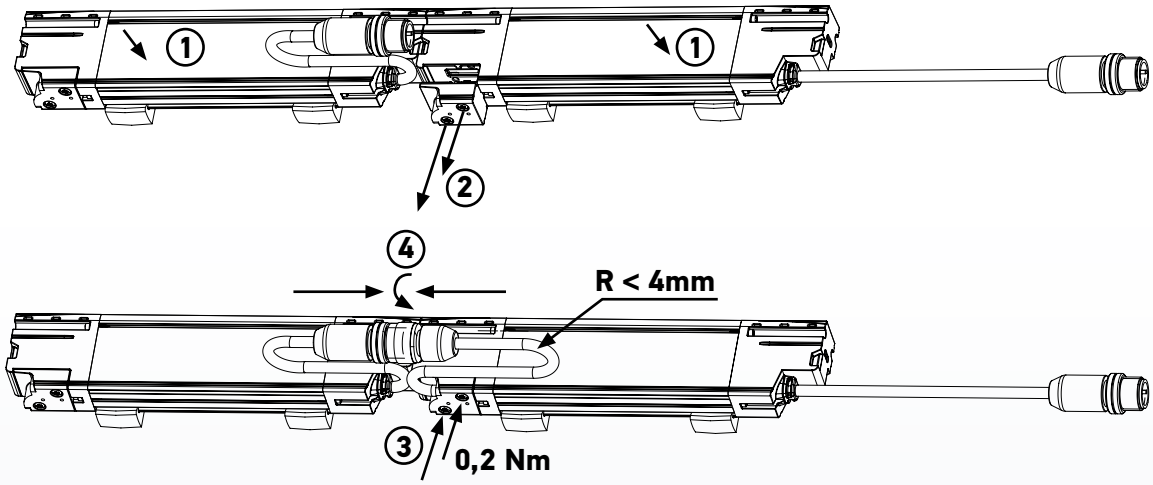

Rev. 07, 05/2020

DATALOGIC PRODUCT OFFERING

Sensors

Hand Held scanners

Mobile Computers

Laser Marking Systems

Vision Systems

Stationary Industrial Scanners

Safety Laser Scanner

RFID Systems

SG BODY COMPACT BASE
SG BODY COMPACT MUTING

Body access detection

Perimeter control

Rapid solution for access control with muting

Easy installation and alignment

L and T muting models provided with Retroreflective Muting Arms

- Two, three or four beams for body protection
- Controlled heights of 500, 800, 900 and 1200 mm
- Long operating distance: up to 50 m
- Simple configuration through DIP switches
- Integrated muting lamp (only on muting models)

APPLICATIONS

- Automatic machines
- Robots
- Automatic assembly lines
- Palletizers and depalletizers
- Material handling

INDUSTRIES

- Food & Beverage
- Metalworking
- Automotive
- Wood
- Ceramics

	FINGER	HAND	ARM	BODY
Type 2				x
Type 4				x

SG2-S2-050-PP-E

TYPE	
2	Type 2
4	Type 4

BEAMS AND MUTING ARMS	
S2	2 Beams
S3	3 Beams
S4	4 Beams
T2	2 Beams with T muting arms (RRX)
T3	3 Beams with T muting arms (RRX)
L2	2 Beams with L muting arms (RRX)
L3	3 Beams with L muting arms (RRX)

MONITORED HEIGHT	
050	500 mm (2 beams)
080	800 mm (3 beams)
090	900 mm (4 beams)
120	1200 mm (4 beams)

VERSION	
X	Base: only automatic restart
E	Base: auto/man restart, EDM
W	Muting: with muting function
N	SG4-N Body Compact Muting: muting function with single main connector

TECHNICAL DATA

	SG2 BODY COMPACT BASE [SG2-Sx-xxx-PP-E]	SG2 BODY COMPACT MUTING [SG2-S/L/Tx-xxx-PP-W]	SG4 BODY COMPACT BASE [SG4-Sx-xxx-PP-X]	SG4 BODY COMPACT BASE [SG4-Sx-xxx-PP-E]	SG4 BODY COMPACT MUTING [SG4-S/L/Tx-xxx-PP-W]	SG4-N BODY COMPACT MUTING [SG4-Sx-xxx-PP-N]
GENERAL DATA						
Type (EN61496-1)	2		4			
PL (EN ISO 13849-1)	c		e			
SIL (IEC 61508)	1		3			
Resolution	315 mm (4 beams) 415 mm (3 and 4 beams) 515 mm (2 beams)					
Protected height	515 mm (2 beams) 815 mm (3 beams) 915 mm or 1215 (4 beams)					
Operating distance	0.5 ...50 m					
Retroreflective muting arms operating distance (included in L and T versions)	-----	0.5 ... 3 m	-----		0.5 ... 3 m	
Emitter-Receiver muting arms operating distance	-----	0.5 ... 7 m	-----		0.5 ... 7 m	
ELECTRICAL DATA						
Power supply (Vdd)	24 Vdc ± 20%					
Outputs	2 PNP					
Output current	0.5 A max / each output					
Capacitive load	65 nF max at 25°C					
Response time	14 ... 16 ms depending on model *					
Cables length (for power supply)	50 m max.					
MECHANICAL AND ENVIRONMENTAL DATA						
Operating temperature	0 ...+55 °C					
Humidity	15 ... 95 % (no condensation)					
Mechanical protection	IP 65 (EN 60529)					
Housing Material	Painted aluminium, Polycarbonate					
Window material	PMMA					
FUNCTIONS						
Test Input	On Receiver		N/A	On Receiver		
Restart	Automatic / Manual		Automatic	Automatic / Manual		
EDM (External Device Monitoring)	On Receiver		N/A	On Receiver		
*Muting type (Selectable with DIP-sw)**	-----	T-Muting / L-Muting	N/A	-----	T-Muting / L-Muting	
*Muting time-out (Selectable with DIP-sw)**	-----	10 min. or ∞	N/A	-----	10 min. or ∞	
Override	-----	On Receiver	N/A	-----	On Receiver	-----
Impulsive Override (single wire)	-----					On Receiver

NOTES

* For detailed informations refer to related Product Manual

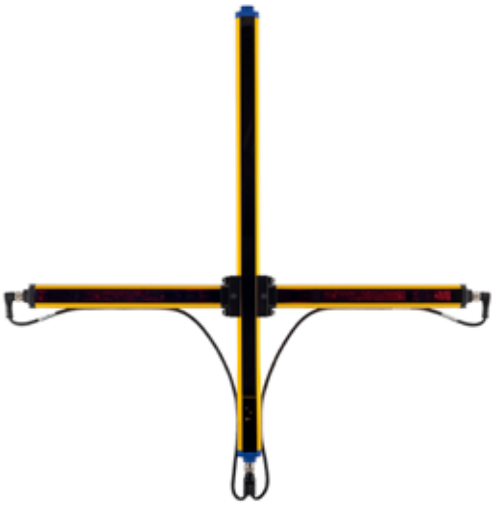

CONNECTIONS

	SG4 BODY COMPACT BASE [SG4-SX-XXX-PP-X]	SG2 BODY COMPACT BASE [SG2-SX-XXX-PP-E] SG4 BODY COMPACT BASE [SG4-SX-XXX-PP-E]	SG2 BODY COMPACT MUTING [SG2-S/L/TX-XXX-PP-W]	SG4 BODY COMPACT MUTING [SG4-S/L/TX-XXX-PP-W]	SG4-N BODY COMPACT MUTING [SG4-SX-XXX-PP-N]
EMITTER MAIN CONNECTOR	M12, 4 poles, male 1 = Brown = 24Vdc 3 = Blue = 0 V 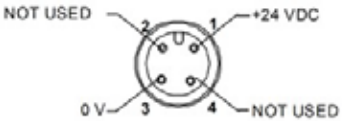				
EMITTER SECONDARY CONNECTOR	------		M12, 5 poles, male 1 = Brown = 24 Vdc 3 = Blue = 0 V 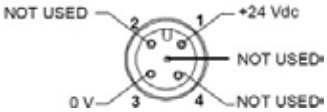		
RECEIVER MAIN CONNECTOR	M12, 5 poles, male 1 = Brown = 24Vdc 2 = White = OSSD1 3 = Blue = 0 V 4 = Black = OSSD2 	M12, 8 poles, male 1 = white = TEST /START 2 = brown = 24 Vdc 4 = yellow = EDM 5 = grey = OSSD 1 6 = pink = OSSD 2 7 = blue = 0V 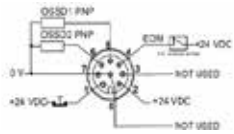	M12, 8 poles, male 1 = white = TEST / START 2 = brown = 24 VDC 3 = green = OVERRIDE 1 4 = yellow = EDM 5 = grey = OSSD 1 6 = pink = OSSD 2 7 = blue = 0V 8 = red = OVERRIDE 2 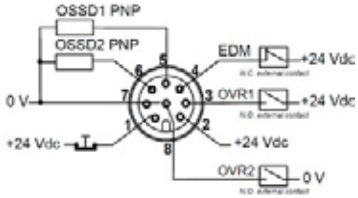	M12, 8 poles, male 1 = white = RESTART / RE-SET / EDM / OVERRIDE 2 = brown = 24 VDC 3 = green = MUTING 1 4 = yellow = MUTING 2 5 = grey = OSSD 1 6 = pink = OSSD 2 7 = blue = 0V 8 = red = MUTING LAMP 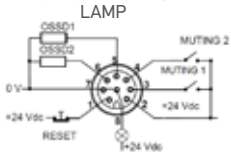
RECEIVER SECONDARY CONNECTOR	------		M12, 5 poles, male 1 = Brown = 24 Vdc 2 = White = MUTING2 3 = Blue = 0 V 4 = Bl ack = MUTING1 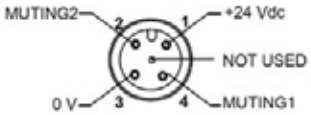		

INDICATORS AND DIP SWITCHES

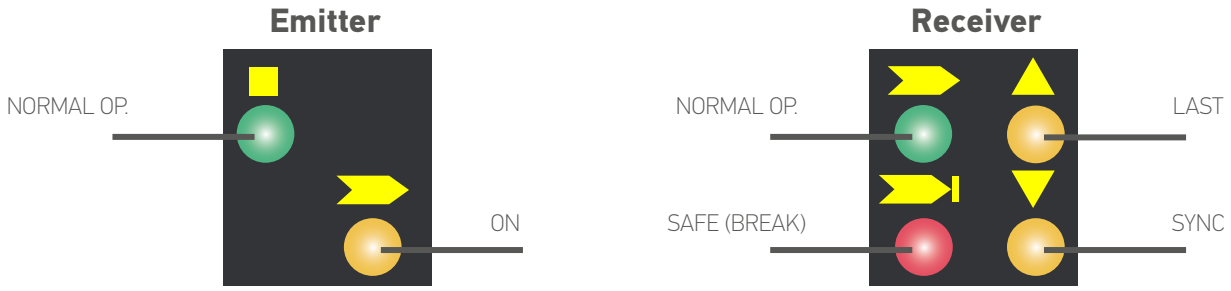

DIP-SW	FUNCTION	ON	OFF
1, 5			
2, 6			
3, 7	EDM	Deactivated	Activated
4, 8	Restart	Automatic	Manual

NOTE

DIP SW are not present on SG4 BODY COMPACT BASE models with -X final: [SGx-Sx-xxx-PP-X]

DIMENSIONS

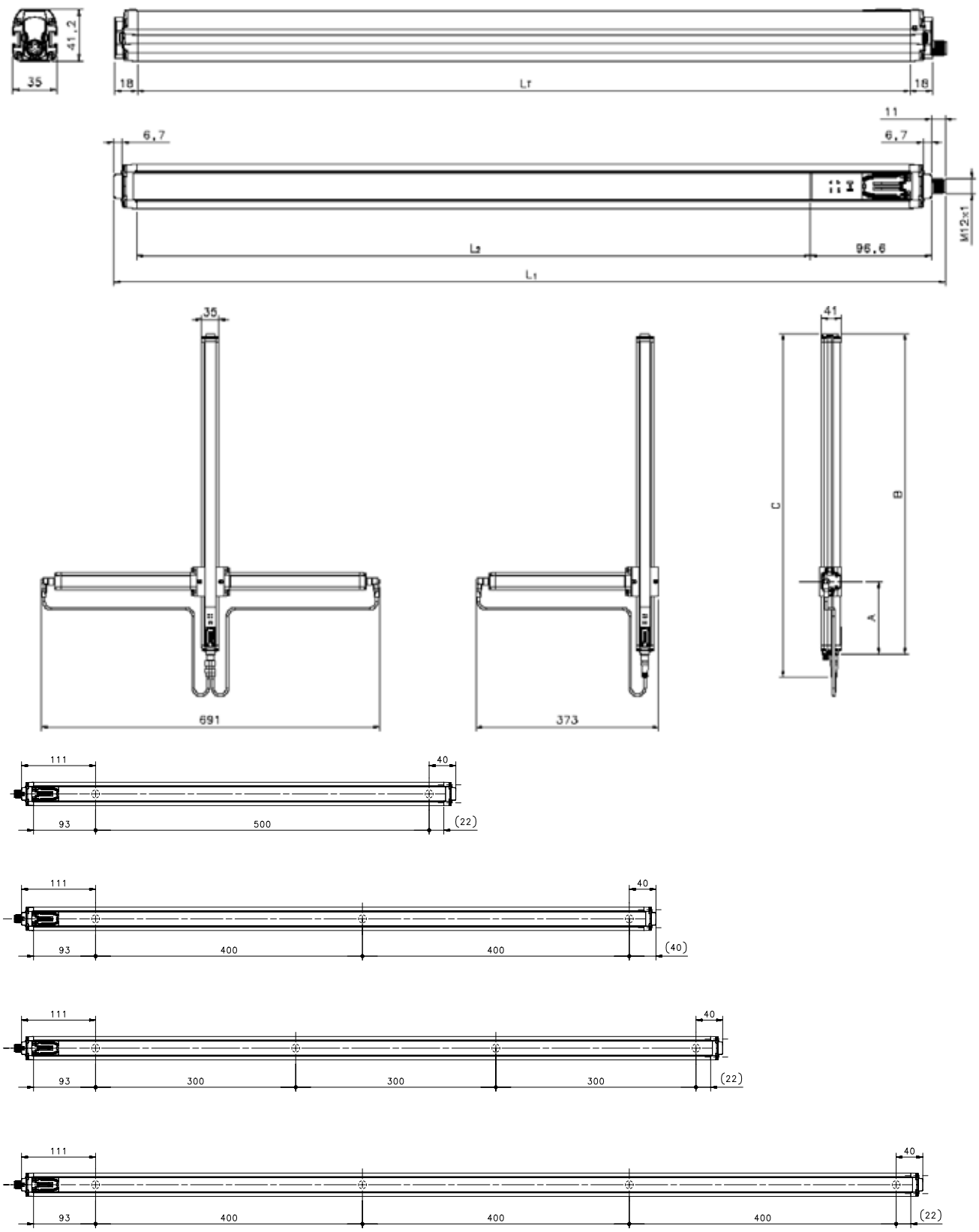

MODEL	L1 (mm)	L2 (mm)	A (mm)	B (mm)	C (mm)
SGx-S/L/Tx-050-PP-x	662	538.4	120-260	653	700
SGx-S/L/Tx-080-PP-x	962	838.4	120-260	953	1000
SGx-S/L/Tx-090-PP-x	1062.5	938.4	120-260	1053	1100
SGx-S/L/Tx-120-PP-x	1362.5	1238.4	120-260	1353	1400

MODEL SELECTION AND ORDER INFORMATION

	SG2 BODY COMPACT BASE [SG2-SX-XXX-PP-E]	ORDER CODE	SG4 BODY COMPACT BASE [SG4-SX-XXX-PP-E]	ORDER CODE
ONLY AUTOMATIC RESTART NO EDM			SG4-S2-050-PP-X	957851600
			SG4-S3-080-PP-X	957851610
			SG4-S4-090-PP-X	957851620
			SG4-S4-120-PP-X	957851630
WITH EDM AND MANUAL RESTART	SG2-S2-050-PP-E	957851000	SG4-S2-050-PP-E	957851040
	SG2-S3-080-PP-E	957851010	SG4-S3-080-PP-E	957851050
	SG2-S4-090-PP-E	957851020	SG4-S4-090-PP-E	957851060
	SG2-S4-120-PP-E	957851030	SG4-S4-120-PP-E	957851070

		SG2 BODY COMPACT MUTING [SG2-S/L/TX-XXX-PP-W]	ORDER CODE	SG4 BODY COMPACT MUTING [SG4-S/L/TX-XXX-PP-W]	ORDER CODE
WITH INTEGRATED MUTING	WITHOUT MUTING ARMS	SG2-S2-050-PP-W	957851080	SG4-S2-050-PP-W	957851160
		SG2-S3-080-PP-W	957851090	SG4-S3-080-PP-W	957851170
		SG2-S4-090-PP-W	957851100	SG4-S4-090-PP-W	957851180
		SG2-S4-120-PP-W	957851110	SG4-S4-120-PP-W	957851190
	WITH L MUTING ARMS	SG2-L2-050-PP-W	957851120	SG4-L2-050-PP-W	957851200
		SG2-L3-080-PP-W	957851130	SG4-L3-080-PP-W	957851210
	WITH T MUTING ARMS	SG2-T2-050-PP-W	957851140	SG4-T2-050-PP-W	957851220
		SG2-T3-080-PP-W	957851150	SG4-T3-080-PP-W	957851230
WITH INTEGRATED MUTING ON MAIN CONNECTOR	WITHOUT MUTING ARMS			SG4 BODY COMPACT MUTING [SG4-S/L/TX-XXX-PP-W]	ORDER CODE
				SG4-S2-050-PP-N	957851640
				SG4-S3-080-PP-N	957851650
				SG4-S4-090-PP-N	957851660
				SG4-S4-120-PP-N	957851670

CABLES

	POLES	CONNECTOR	LENGHT (M)	MODEL	ORDER NUMBER
SG BODY COMPACT BASE/MUTING EMITTER MAIN CONNECTOR [SG2\4-SX-XXX-PP-X/E/W/N] SG BODY COMPACT BASE RECEIVER MAIN CONNECTOR [SG2\4-SX-XXX-PP-X] SG BODY COMPACT MUTING EMITTER AND RECEIVER SECONDARY CONNECTORS [SG2\4-S/L/TX-XXX-PP-W]	4	Axial	3	CV-A1-22-B-03	95ACC1480
			5	CV-A1-22-B-05	95ACC1490
			10	CV-A1-22-B-10	95ACC1500
			15	CV-A1-22-B-15	95ACC2070
			25	CV-A1-22-B-25	95ACC2090
		Radial	3	CV-A2-22-B-03	95ACC1540
			5	CV-A2-22-B-05	95ACC1550
			10	CV-A2-22-B-10	95ACC1560
SG BODY COMPACT BASE/MUTING RECEIVER MAIN CONNECTOR [SG2/4-SX-XXX-PP-E] [SG2/4-S/L/TX-XXX-PP-W] [SG4-SX-XXX-PP-N]	8	Axial	3	CV-A1-26-B-03	95ACC1510
			5	CV-A1-26-B-05	95ACC1520
			10	CV-A1-26-B-10	95ACC1530
			15	CV-A1-26-B-15	95ACC2080
			25	CV-A1-26-B-25	95ACC2100
		Radial	3	CV-A2-26-B-03	95ACC1600
			5	CV-A2-26-B-05	95ACC1610
			10	CV-A2-26-B-10	95ACC1620

NOTE

The cables for the secondary connector of SG BODY COMPACT MUTING T and L are provided within the package

ACCESSORIES

	SG4 BODY COMPACT BASE [SG4-SX-XXX-PP-X]	SG2 BODY COMPACT BASE SG4 BODY COMPACT BASE [SG2/4-SX-XXX-PP-E]	SG2 BODY COMPACT MUTING SG4 BODY COMPACT MUTING [SG2/4-S/L/TX-XXX-PP-W]	SG4-N BODY COMPACT MUTING [SG4-SX-XXX-PP-N]
BRACKETS				
Standard angled brackets (4 pcs)[1]	ST-KSTD (included)			
Rotating brackets (4 pcs)	ST-K4ROT-SG BODY COMPACT			
Antivibration support (4 Pcs / 6 pcs)[3]	ST-K4AV ST-K6AV			
Orientable support (4 pcs / 6 pcs)[3]	ST-K4OR ST-K6OR			
Plastic brackets (4 pcs / 6 pcs)[3]	ST-KP4MP ST-KP6MP			
PROTECTION TUBES AND STANDS				
IP67/IP69K tubes	-----			
Protective stands	SG-PSB series [2]			
Stand plate for SG-PSB	SG-P			
Protective stands mounting brackets (4 pcs / 6 pcs)[3]	ST-PS4-SG-SE ST-PS6-SG-SE			
Floor columns	SE-S Series			
MIRRORS				
Protective stands with single mirrors	SG-PSM series			
Deviating mirrors mounting kit for SG-PSB	ST-PS-DM			
Deviating mirrors	SG-DM series			
Mirror mounting bracket	ST-DM			
SAFETY UNITS				
Safety unit	SE-SR2			
Edm relay box[4]	---	CS ME-03VU24-Y14		
Safety control unit for single beams and SLC	SG-BWS-T4-MT			
ALIGNMENT TOOL				
Laser pointer	SG-LP			
ACCESSORIES FOR MUTING				
Muting arms, brackets and cables	---		See page 77	---
Muting connection box	---		SG-SRT-1 ****	---
External muting lamps	---		LMS Series	

NOTES

[1] 1200 mm models are provided with 6 pcs standard brackets

[2] Not possible with T or L muting arms mounted

[3] Use 6 brackets for light curtains with length >= 1200 mm

[4] When using EDM Relay Box or Muting connection box, connect EDM input, and be sure EDM function is active on the safety light curtain

The company endeavours to continuously improve and renew its products; for this reason the technical data and contents of this catalogue may undergo variations without prior notice. For correct installation and use, the company can guarantee only the data indicated in the instruction manual supplied with the products.

SG BODY BIG BASE
SG BODY BIG MUTING

Robust housing for harsh environments
Long operating range for perimeter control
Rapid solution for access control with muting
Easy installation and alignment

- 2, 3, 4 beams for body protection
- 40 mm resolution for arm protection and presence detection
- Controlled heights 500, 800, 900 and 1200 mm
- Long operating distance: up to 60 m
- Simple configuration through DIP switches
- Integrated muting lamp (only muting models)
- Anti-interference coding
- External muting enable signal
- Edged or triggered muting dependent override

APPLICATIONS

- Automatic machines
- Robots
- Automatic assembly lines
- Palletizers and depalletizers
- Material handling

INDUSTRIES

- Food & Beverage
- Metalworking
- Automotive
- Wood
- Ceramics

	FINGER	HAND	ARM	BODY
Type 2				x
Type 4			x	x

SG2-B2-050-00-E

TYPE	
2	Type 2
4	Type 4

BEAMS AND RANGE	
B2	2 Beams
B3	3 Beams
B4	4 Beams
BSR2	2 Beams Short Range (only type 4)
BSR3	3 Beams Short Range (only type 4)
BSR4	4 Beams Short Range (only type 4)
BLR2	2 Beams Long Range (only type 4)
BLR3	3 Beams Long Range (only type 4)
BLR4	4 Beams Long Range (only type 4)

MONITORED HEIGHT	
050	500 mm (2 beams)
080	800 mm (3 beams)
090	900 mm (4 beams)
120	1200 mm (4 beams)

VERSION	
E	Base: without muting function
W-C	Muting: with integrated muting function

SG4-40-060-00-E

MONITORED HEIGHT	
060	660 mm
090	960 mm
120	1260 mm

TECHNICAL DATA

	SG2 BODY BIG BASE [SG2-Bx-xxx-00-E]	SG2 BODY BIG MUTING [SG2-Bxxx-xxx-00-W-C]	SG4 BODY BIG BASE [SG4-Bx-xxx-00-E]	SG4 BODY BIG MUTING [SG4-Bxxx-xxx-00-W-C]	SG4 LONG RANGE BASE [SG4-40-xxx-00-E]
GENERAL DATA					
Type (EN61496-1-2)	2		4		
PL (EN ISO 13849-1)	c		e		
SIL (IEC 61508)	1		3		
Resolution	319,75 mm (4 beams) 419,75 mm (3 and 4 beams) 519,75 mm (2 beams)				40 mm
Operating distance	0.5 ... 60 m		6 ... 60 m	0.5 ... 30 m (Short Range model) 6 ... 60 m (Long Range model)	6 ... 60 m
Retroreflective muting arms operating distance (not included)	---	0.5 ... 3 m	---	0.5 ... 3 m (Only for Short Range model)	---
Emitter-Receiver muting arms operating distance	---	0.5 ... 7 m	---	0.5 ... 7 m	---
Protected height	500 mm (2 beams) 800 mm (3 beams) 900 mm or 1200 (4 beams)				660 mm 960 mm 1260 mm
ELECTRICAL DATA					
Power supply (Vdd)	24 Vdc ± 20%				
Outputs	2 PNP				
Output current	0.5 A max/each output				
Capacitive load	2,2 uF max at 25°C				
Response time	11 ... 24 ms depending on model [A]				20 ... 24 ms depending on model [A]
Cables length (for power supply)	70 m max.				
MECHANICAL AND ENVIRONMENTAL DATA					
Operating temperature	0 ...+55 °C				
Humidity	15 ... 95 % (no condensation)				
Mechanical protection	IP 65 (EN 60529)				
Housing Material	Painted aluminium, PBT				
Window material	PMMA				
FUNCTIONS					
	Test input				
	Manual/Automatic restart				
	External Device Monitoring (EDM)				
	Coding selection with DIP-SW				
	---	T-Muting/L-Muting	---	T-Muting/L-Muting	---
	---	Muting timeout: 10 min. or ∞	---	Muting timeout: 10 min. or ∞	---
	---	Integrated muting lamp		Integrated muting lamp	---
	---	Override	---	Override	---
	---	Muting enable input	---	Muting enable input	---
	---	Override status output	---	Override status output	---
	---	Muting lamp output	---	Muting lamp output	---

NOTES

[A] For detailed informations refer to related Product Datasheet or Manual

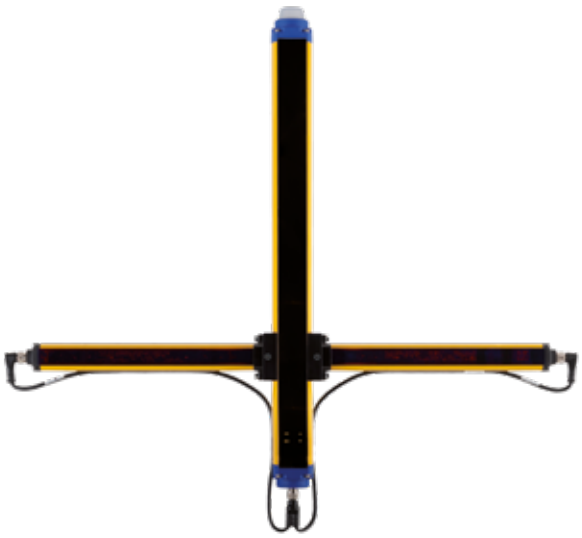

CONNECTIONS

	SG BODY BIG BASE [SG2/4-Bx-xxx-00-E] SG4 LONG RANGE BASE [SG4-40-xxx-00-E]	SG BODY BIG MUTING [SG2/4-Bxxx-xxx-00-W-C]
	M12, 5 poles, male 1 = brown = 24Vdc; 2 = white = TEST; 3 = blue = 0V; 4 = black = EARTH	
EMITTER MAIN CONNECTOR	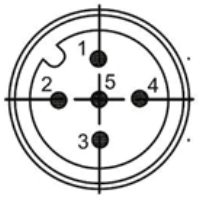	
EMITTER SECONDARY CONNECTOR	---	M12, 5 poles, male 1 = brown = 24Vdc; 3 = blue = 0V
	---	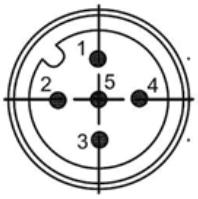
RECEIVER MAIN CONNECTOR	M12, 8 poles, male 1 = white = RESET/RESTART/RESTART MODE; 2 = brown = 24Vdc; 3 = green = EDM ENABLE; 4 = yellow = EDM; 5 = grey = OSSD1; 6 = pink = OSSD2; 7 = blue = 0V; 8 = red = EARTH	M12 12-pole connector 1 = Brown = 24Vdc; 2 = Blue = 0V; 3 = White = RESET/RESTART/RESTART MODE; 4 = Green = OVERRIDE 1; 5 = Pink = OSSD 2; 6 = Yellow = EDM; 7 = Black = MUTING ENABLE; 8 = Grey = OSSD 1; 9 = Red = OVERRIDE 2; 10 = Violet = LAMP OUTPUT; 11 = Grey-Pink = OVERRIDE STATUS; 12 = Red-Blue = EARTH
	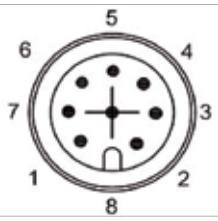	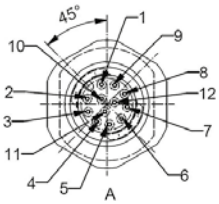
RECEIVER SECONDARY CONNECTOR	---	M12, 5 poles, male 1 = brown = 24Vdc; 2 = white = MUTING2; 3 = blue = 0V; 4 = black = MUTING 1
	---	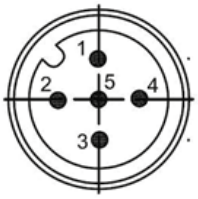

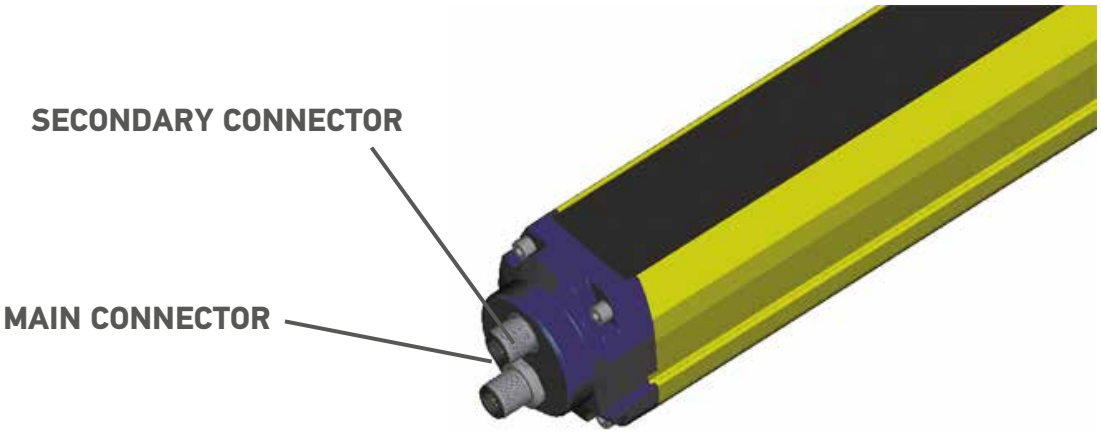

ACCESSORIES

	SG BODY BIG BASE [SG2/4-Bx-xxx-00-E]	SG BODY BIG MUTING [SG2/4-Bxxx-xxx-00-W-C]	SG4 LONG RANGE BASE [SG4-40-xxx-00-E]
	BRACKETS		
Included with the light curtain	None		
Standard angled brackets (4 pcs)	ST-K4STD-SG-BODY BIG		
Rear fixing bracket mounting (4 pcs)	ST-K4REAR-SG BODY BIG		
Rotating brackets (4 pcs)	ST-K4ROT-SG BODY BIG		
Antivibration support (4 pcs/6 pcs) [c]	ST-K4AV ST-K6AV		
Plastic brackets (4 pcs/6 pcs) [c]	ST-KP4MP ST-KP6MP		
	PROTECTION TUBES, STANDS		
IP67/IP69K tubes	---		
Protective stands	SG-PSB series [B]		
Stand plate for SG-PSB	SG-P		
Protective stands mounting brackets (4 Pcs/6 pcs) [c]	ST-PS4-SG BODY ST-PS6-SG BODY		
Floor columns	SE-S Series		
	MIRRORS		
Protective stands with single mirrors	SG-PSM series		---
Deviating mirrors mounting kit for SG-PSB	ST-PS-DM		
Deviating mirrors	SG-DM series		
Mirror mounting bracket	ST-DM		
	SAFETY UNIT		
Safety unit	SE-SR2		
Edm relay box [d]	CS ME-03VU24-Y14		
Safety control unit for single beams and SLC	SG-BWS-T4-MT		
	ALIGNMENT TOOL		
Laser pointer	SG-LP		
	ACCESSORIES FOR MUTING		
Muting arms, brackets and cables	---	See page 70	---
Muting connection box [d]	---	SG-SRT-1	---
External muting lamps	---	LMS series	

NOTES

[B] Not possible with T or L muting arms mounted

[C] Use 6 brackets for light curtains with length ≥ 1200 mm

[D] When using EDM Relay Box or Muting connection box, connect EDM input, and be sure EDM function is active on the safety light curtain

DIMENSIONS (MM)

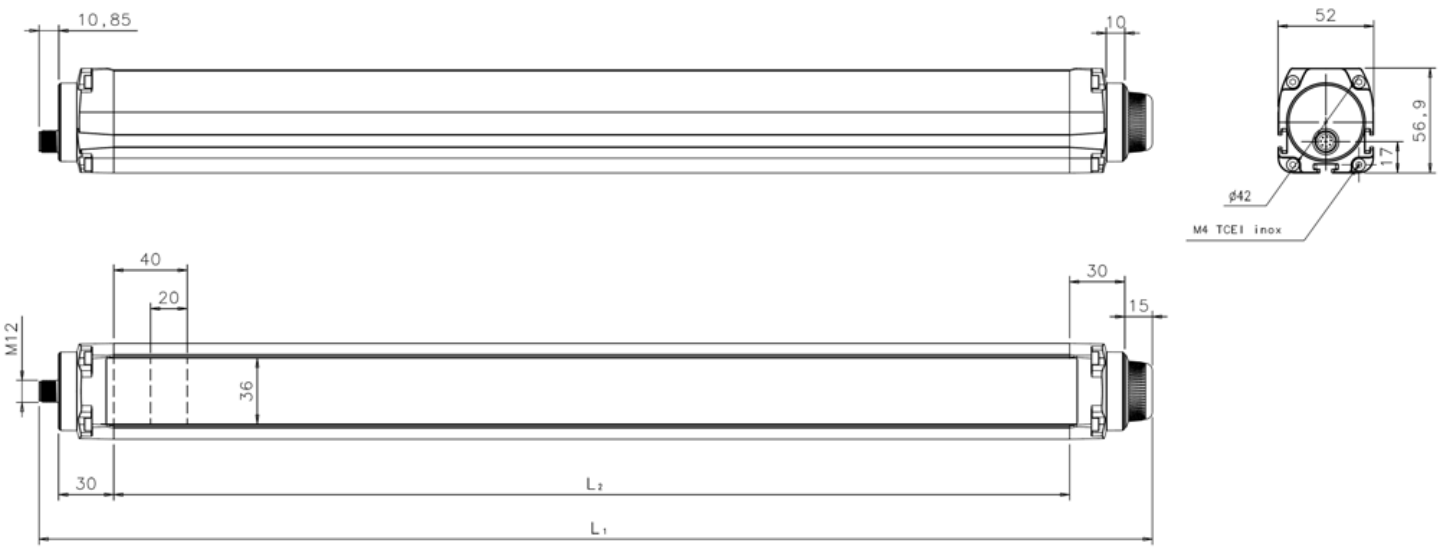

DIMENSIONS (MM)

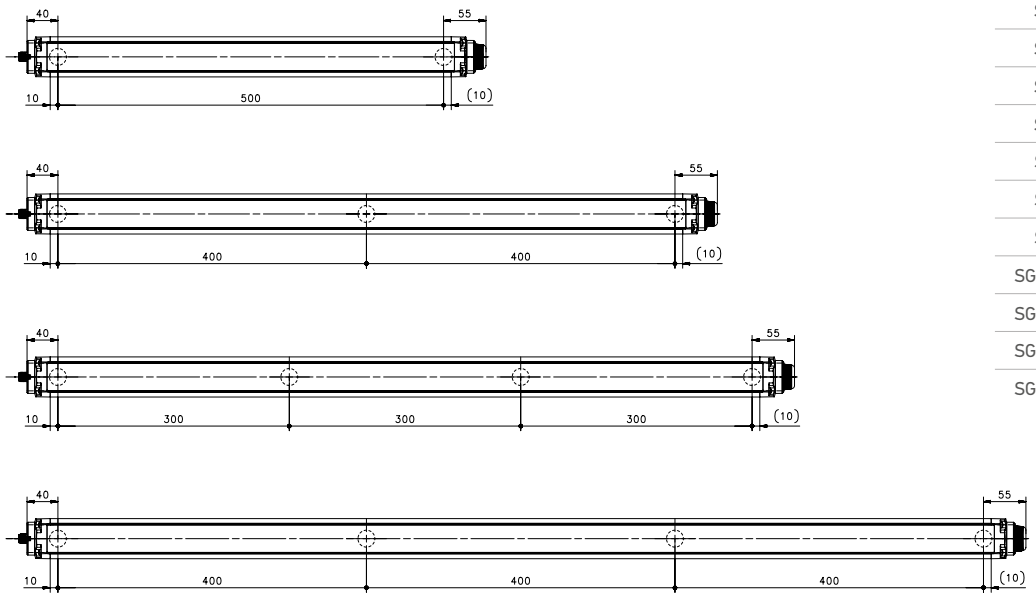

MODEL	L1 [mm]	L2 [mm]
SGx-B2-050-OO-E	606,35	520,5
SGx-B3-080-OO-E	906,35	820,5
SGx-B4-090-OO-E	1006,35	920,5
SGx-B4-120-OO-E	1306,35	1220,5
SG4-40-060-OO-E	783,35	700,5
SG4-40-090-OO-E	1083,35	1000,5
SG4-40-120-OO-E	1383,35	1300,5
SGx-Byy2-050-OO-W-C	609,35	520,5
SGx-Byy3-080-OO-W-C	909,35	820,5
SGx-Byy4-090-OO-W-C	1009,35	920,5
SGx-Byy4-120-OO-W-C	1309,35	1220,5

INDICATORS

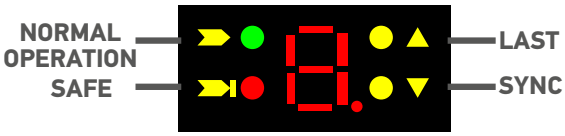

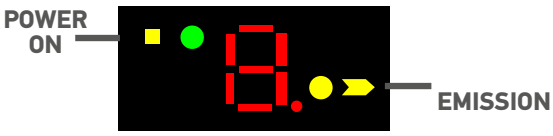

MODEL SELECTION AND ORDER INFORMATION

	BODY PROTECTION					ARM PROTECTION PRESENCE DETECTION	
	SG2 BODY BIG BASE [SG2-BX-XXX-OO-E]	ORDER CODE		SG4 BODY BIG BASE [SG4-BX-XXX-OO-E]	ORDER CODE	SG4 LONG RANGE BASE [SG4-40-XXX-OO-E]	ORDER CODE
WITHOUT MUTING	SG2-B2-050-OO-E	957851240	WITHOUT MUTING	SG4-B2-050-OO-E	957851280	SG4-40-060-OO-E	957851570
	SG2-B3-080-OO-E	957851250		SG4-B3-080-OO-E	957851290	SG4-40-090-OO-E	957851580
	SG2-B4-090-OO-E	957851260		SG4-B4-090-OO-E	957851300	SG4-40-120-OO-E	957851590
	SG2-B4-120-OO-E	957851270		SG4-B4-120-OO-E	957851310	---	---
WITH INTEGRATED MUTING	SG2 BODY BIG MUTING [SG2-BXXX-XXX-OO-W-C]	ORDER CODE	SHORT RANGE	SG4 BODY BIG MUTING [SG4-BXXX-XXX-OO-W-C]	ORDER CODE		
	SG2-B2-050-OO-W-C	957851320		SG4-BSR2-050-OO-W-C	957851400	---	---
	SG2-B3-080-OO-W-C	957851330		SG4-BSR3-080-OO-W-C	957851410	---	---
	SG2-B4-090-OO-W-C	957851340		SG4-BSR4-090-OO-W-C	957851420	---	---
	SG2-B4-120-OO-W-C	957851350		SG4-BSR4-120-OO-W-C	957851430	---	---
	---	---	LONG RANGE	SG4-BLR2-050-OO-W-C	957851360	---	---
	---	---		SG4-BLR3-080-OO-W-C	957851370	---	---
	---	---		SG4-BLR4-090-OO-W-C	957851380	---	---
	---	---		SG4-BLR4-120-OO-W-C	957851390	---	---

CABLES

	TRANSMITTER CABLE (MAIN CONNECTOR)	LENGTH (m)	ORDER CODE
SG BODY BIG BASE [SG2-Bx-xxx-OO-E] [SG4-Bx-xxx-OO-E]	CS -A1-03-U-03	3	95ASE 1170
	CS -A1-03-U-05	5	95ASE 1180
SG4 LONG RANGE BASE [SG4-40-xxx-OO-E]	CS -A1-03-U-10	10	95ASE 1190
	CS -A1-03-U-15	15	95ASE 1200
SG BODY BIG MUTING [SG2-Bx-xxx-OO-W-C] [SG4-Bxxx-xxx-OO-W-C]	CS -A1-03-U-25	25	95ASE 1210
	CS -A1-03-U-50	50	95A252700
	RECEIVER CABLE (MAIN CONNECTOR)	LENGTH (m)	ORDER CODE
SG BODY BIG BASE [SG2-Bx-xxx-OO-E] [SG4-Bx-xxx-OO-E]	CS -A1-06-U-03	3	95ASE1220
	CS -A1-06-U-05	5	95ASE1230
	CS -A1-06-U-10	10	95ASE1240
SG4 LONG RANGE BASE [SG4-40-xxx-OO-E]	CS -A1-06-U-15	15	95ASE1250
	CS -A1-06-U-25	25	95ASE1260
	CS -A1-06-U-50	50	95A252710
SG BODY BIG MUTING [SG2-Bx-xxx-OO-W-C] [SG4-Bxxx-xxx-OO-W-C]	CS -A1-10-U-03	3	95A252720
	CS -A1-10-U-05	5	95A252730
	CS -A1-10-U-10	10	95A252740
	CS -A1-10-U-15	15	95A252750
	CS -A1-10-U-25	25	95A252760
	CS -A1-10-U-50	50	95A252770
	TRANSMITTER CABLE (SECONDARY CONNECTOR) RECEIVER CABLE (SECONDARY CONNECTOR)	LENGTH (m)	ORDER CODE
SG BODY BIG MUTING [SG2-Bx-xxx-OO-W-C] [SG4-Bxxx-xxx-OO-W-C]	CS -A1-03-U-03	3	95ASE 1170
	CS -A1-03-U-05	5	95ASE 1180
	CS -A1-03-U-10	10	95ASE 1190
	CS -A1-03-U-15	15	95ASE 1200
	CS -A1-03-U-25	25	95ASE 1210
	CS -A1-03-U-50	50	95A252700

NOTES

All cables have axial connectors

Rev. 07, 05/2020

The company endeavours to continuously improve and renew its products; for this reason the technical data and contents of this catalogue may undergo variations without prior notice. For correct installation and use, the company can guarantee only the data indicated in the instruction manual supplied with the products.

SG BODY REFLECTOR BASE
SG BODY REFLECTOR MUTING

One active and one passive unit to reduce wiring and installation costs

Robust housing for harsh environments

Easy installation and alignment

Reflective muting arms included in L and T muting version

All advanced features associated to muting function

- 2, 3, 4 beams for body protection
- Controlled heights 500, 800, 900 and 1200 mm
- Up to 8 m operating distance
- Simple configuration through DIP switches
- Integrated muting lamp (muting models)
- Anti-interference coding
- External muting enable signal
- Edged or triggered muting dependent override

APPLICATIONS

- Automatic machines
- Robots
- Automatic assembling lines
- Palletizers and Depalletizers

INDUSTRIES

- Food & Beverage, Metalworking, Automotive, Wood, Ceramics

	FINGER	HAND	ARM	BODY
Type 2				
Type 4				x

Active unit

SG4-RB2L-050-OO-W

TYPE	
4	Type 4

BEAMS AND RANGE	
2	2 Beams
3	3 Beams
4	4 Beams

MUTING ARMS	
---	Linear version: no muting arms included
L	L muting arms included
T	T muting arms included

MONITORED HEIGHT	
050	500 mm (2 beams)
080	800 mm (3 beams)
090	900 mm (4beams)
120	1200 mm (4 beams)

VERSION	
E	Base: without integrated muting function
W	Muting: with integrated muting function
N	SG4-N Body Reflector Muting: muting function with single main connector

Passive unit

SG4-RDB2L-090

TYPE	
4	Type 4

BEAMS AND RANGE	
2	2 Beams
3	3 Beams
4	4 Beams

MUTING ARMS	
---	Linear version: no muting arms included
L	L muting arms included
T	T muting arms included

MONITORED HEIGHT	
---	500 mm (2 beams) or 800 mm (3 beams)
090	900 mm (4 beams)
120	1200 mm (4 beams)

TECHNICAL DATA

	SG BODY REFLECTOR BASE [SG4-RBx-xxx-00-E] + [SG4-RDBx]	SG BODY REFLECTOR MUTING [SG4-RBx-xxx-00-W] + [SG4-RDBx] [SG4-RBxL/T-xxx-00-W] + [SG4-RDBxL/T]	SG4-N BODY REFLECTOR MUTING [SG4-RBx-xxx-00-N] + [SG4-RDBx]
GENERAL DATA			
Type (EN61496-1)	4		
PL (EN ISO 13849-1)	e		
SIL (IEC 61508)	3		
Resolution	319,75 mm (4 beams) 419,75 mm (3 and 4 beams) 519,75 mm (2 beams)		
Protected height	500 mm (2 beams) 800 mm (3 beams) 900 mm or 1200 (4 beams)		
Operating distance	0.5 ... 8 m 0.5 ... 6.5 m (for SG4-RB4-090-00-E)	0.5 ... 8 m (for SG4-RBx-xxx-00-W) 0.5 ... 6.5 m (for SG4-RB4-090-00-W) 0.5 ... 3 m (for SG4-RBxL/T-00-W)	0.5 ... 8 m (for SG4-RBx-xxx-00-N) 0.5 ... 6.5 m (for SG4-RB4-090-00-N)
Retroreflective muting arms operating distance (included in T and L models)	---	0.5 ... 3 m	---
Emitter-Receiver muting arms operating distance (not included)	---	0.5 ... 7 m	---
ELECTRICAL DATA			
Power supply (Vdd)	24 Vdc ± 20%		
Outputs	2 PNP		
Output current	0.5 A max / each output		
Capacitive load	2,2 uF max at 25°C		
Response time	11 ... 12 ms depending on model *		
Cables length (for power supply)	70 m max.		
MECHANICAL AND ENVIRONMENTAL DATA			
Operating temperature	0 ...+55 °C		
Humidity	15 ... 95 % (no condensation)		
Mechanical protection	IP 65 (EN 60529)		
Housing Material	Painted aluminium, PBT		
Window material	PMMA		
FUNCTIONS			
	Manual / Automatic restart		
	External Device Monitoring (EDM)		
	Coding selection with DIP-SW		
---	---	T-Muting / L-Muting	
---	---	Integrated muting lamp	
---	---	Muting filter	
---	---	Muting timeout: 10 min. or ∞	
---	---	Muting enable input	---
---	---	Override status output	---
---	---	External muting lamp output	---
---	---	Override	---
	---		Impulsive Override

NOTES

* For detailed informations refer to related Product Datasheet or Manual

CONNECTIONS

	SG BODY REFLECTOR BASE [SG4-RBX-XXX-00-E]	SG BODY REFLECTOR MUTING [SG4-RBX-XXX-00-W] [SG4-RBXL/T-XXX-00-W]	SG4-N BODY REFLECTOR MUTING [SG4-RBX-XXX-00-N] + [SG4-RDBX]
ACTIVE UNIT MAIN CONNECTOR	M12, 8 poles, male 1. white = RESET/RESTART/RESTART MODE 2. brown = 24V 3. green = EDM ENABLE 4. yellow = EDM 5. grey = OSSD1 6. pink = OSSD2 7. blue = 0V 8. red = EARTH	M12, 12 poles, male 1. brown = 24Vdc 2. blue = 0 V 3. white = RESET/RESTART/RESTART MODE 4. green = OVERRIDE1 5. pink = OSSD2 6. yellow = EDM 7. black = MUTING ENABLE 8. grey = OSSD1 9 = red = OVERRIDE2 10 = violet = LAMP INPUT 11. grey-pink = OVERRIDE STATUS 12. red-blue = EARTH	1. white = START / RESET / EDM / OVERRIDE 2. brown = +24 VDC 3. green = MUTING 4. yellow = MUTING 2 5. grey = OSSD1 6. pink = OSSD2 7. blue = 0 V 8. red = MUTING LAMP
	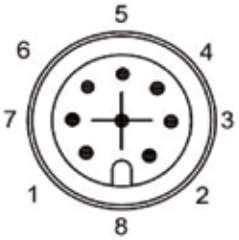	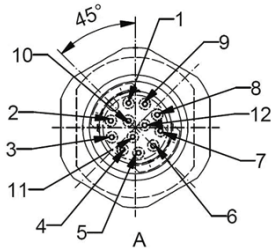	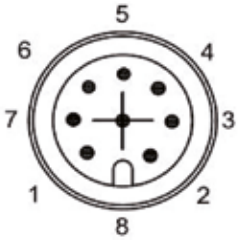
ACTIVE UNIT SECONDARY CONNECTOR	---	M12, 5 poles, male 1 = brown = 24Vdc 2 = white = MUTING2 3 = blue = 0V 4 = black = MUTING1	---
	---	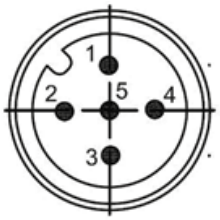	---

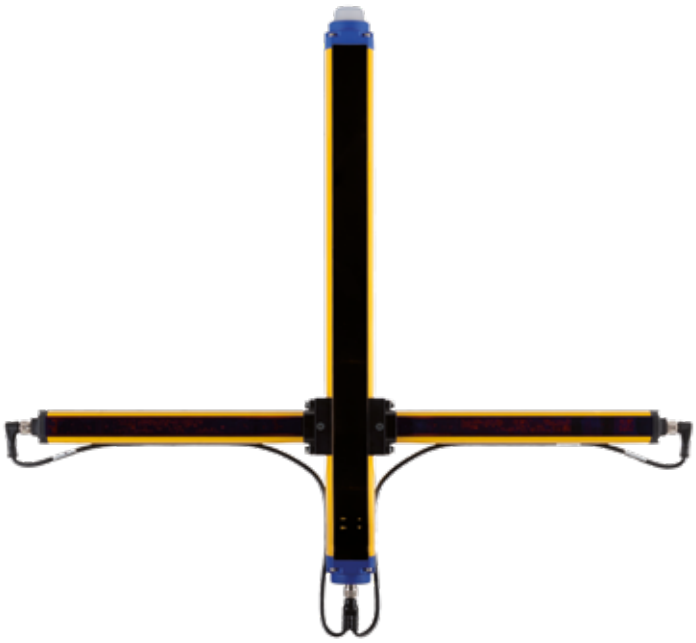

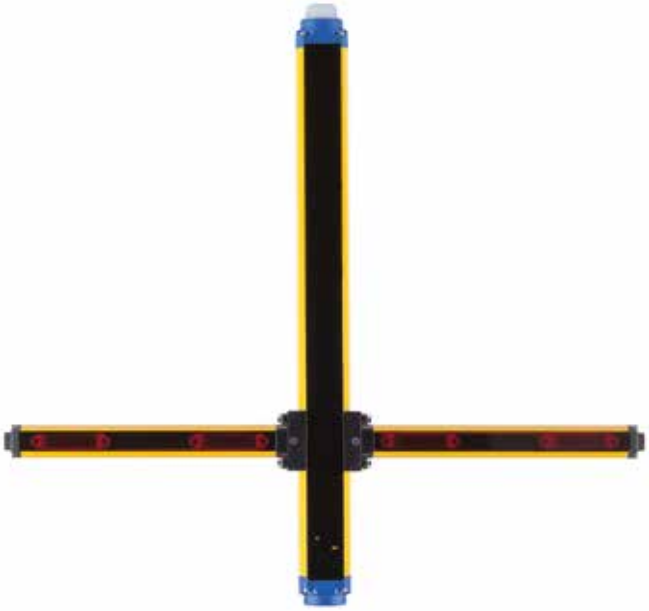

ACCESSORIES

	SG BODY REFLECTOR BASE [SG4-RBX-XXX-00-E] + [SG4-RDBX]	SG BODY REFLECTOR MUTING [SG4-RBX-XXX-00-W] + [SG4-RDBX] [SG4-RBXL/T-XXX-00-W] + [SG4-RDBXL/T]	SG4-N BODY REFLECTOR MUTING [SG4-RBX-XXX-00-N] + [SG4-RDBX]
BRACKETS			
Included with the light curtain	None		
Standard angled brackets (4 pcs)	ST-K4STD-SG-BODY BIG		
Rear fixing bracket mounting (4 pcs)	ST-K4REAR-SG BODY BIG		
Rotating brackets (4 pcs)	ST-K4ROT-SG BODY BIG		
Antivibration support (4 pcs/6 pcs) ***	ST-K4AV ST-K6AV		
Plastic brackets (4 pcs/6 pcs) ***	ST-KP4MP ST-KP6MP		
PROTECTION TUBES, STANDS			
IP67/IP69K Tubes	---		
Protective Stands	SG-PSB series *		
Stand Plate for SG-PSB	SG-P		
Protective Stands Mounting Brackets (4 pcs/6 pcs) ***	ST-PS4-SG BODY ST-PS6-SG BODY		
Floor columns	SE-S Series		
SAFETY UNITS			
Safety Unit	SE-SR2		
EDM Relay Box ***	CS ME-03VU24-Y14		
Safety control unit for single beams and SLC	SG-BWS-T4-MT		
ALIGNMENT TOOL			
LASER Pointer	SG-LP		
ACCESSORIES FOR MUTING			
Muting arms, brackets and cables	---	See accessories section	---
Muting Connection box ***	---	SG-SRT-1 or SG-SRT-2	---
External muting lamps	---	LMS Series	

NOTES

* Not possible with T or L muting arms mounted

** Use 6 brackets for light curtains with length ≥ 1200 mm

*** When using EDM Relay Box or Muting connection boxes, connect EDM input, and be sure EDM function is active on the safety light curtain

DIMENSIONS

SG BODY REFLECTOR BASE - ACTIVE UNIT

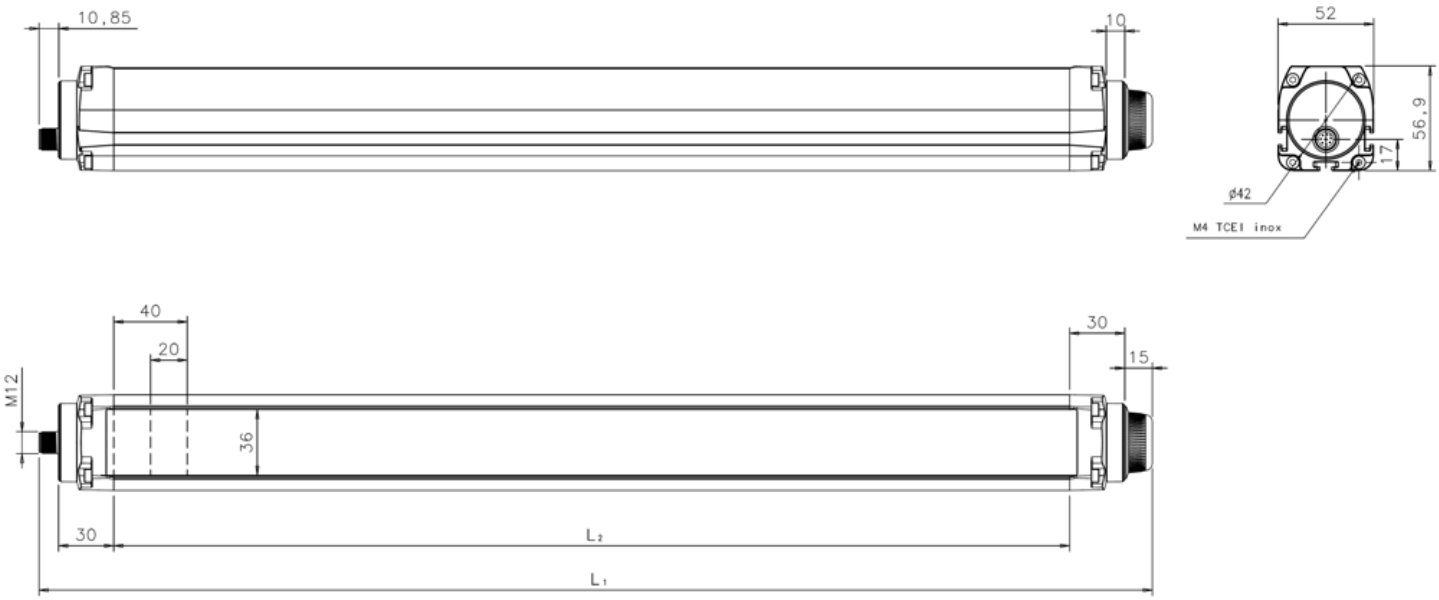

MODEL	L1 [mm]	L2 [mm]
SGx-RB2-050-OO-E	606,35	520,5
SGx-RB3-080-OO-E	906,35	820,5
SGx-RB4-090-OO-E	1006,35	920,5
SGx-RB4-120-OO-E	1306,35	1220,5

SG BODY REFLECTOR MUTING - ACTIVE UNIT

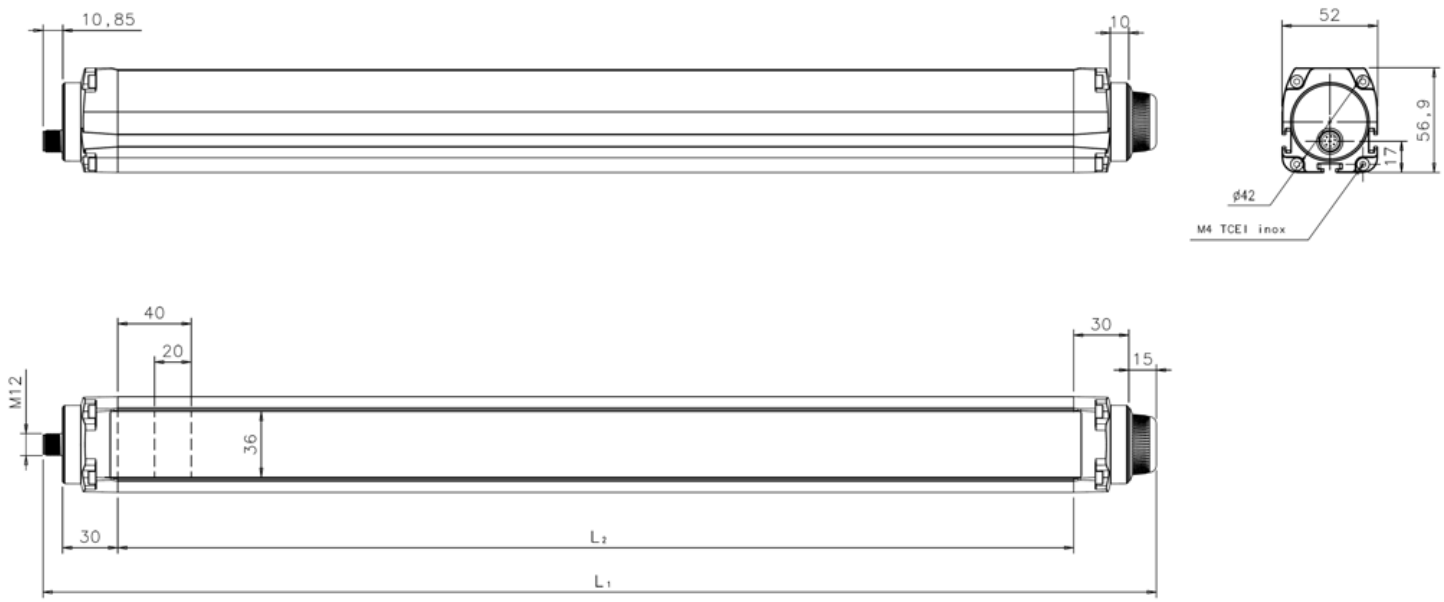

MODEL	L1 [mm]	L2 [mm]
SGx-RB2y-050-OO-W	609,35	520,5
SGx-RB3y-080-OO-W	909,35	820,5
SGx-RB4y-090-OO-W	1009,35	920,5
SGx-RB4y-120-OO-W	1309,35	1220,5

DIMENSIONS

SG BODY REFLECTOR BASE - PASSIVE UNIT • SG BODY REFLECTOR MUTING - PASSIVE UNIT

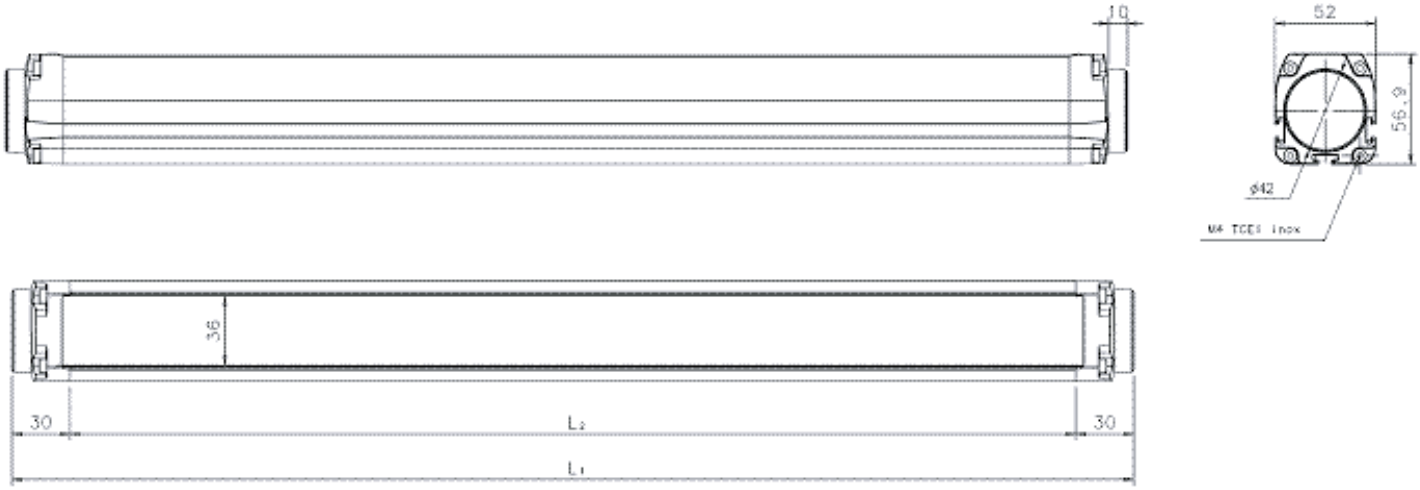

MODEL	L1 [mm]	L2 [mm]
SG4-RDB2	580,5	520,5
SG4-RDB2L	580,5	520,5
SG4-RDB2T	580,5	520,5
SG4-RDB3	880,5	820,5
SG4-RDB3L	880,5	820,5
SG4-RDB3T	880,5	820,5
SG4-RDB4-090	980,5	920,5
SG4-RDB4-120	1280,5	1220,5

SG BODY REFLECTOR BASE WITH T MUTING ARMS - ACTIVE SIDE

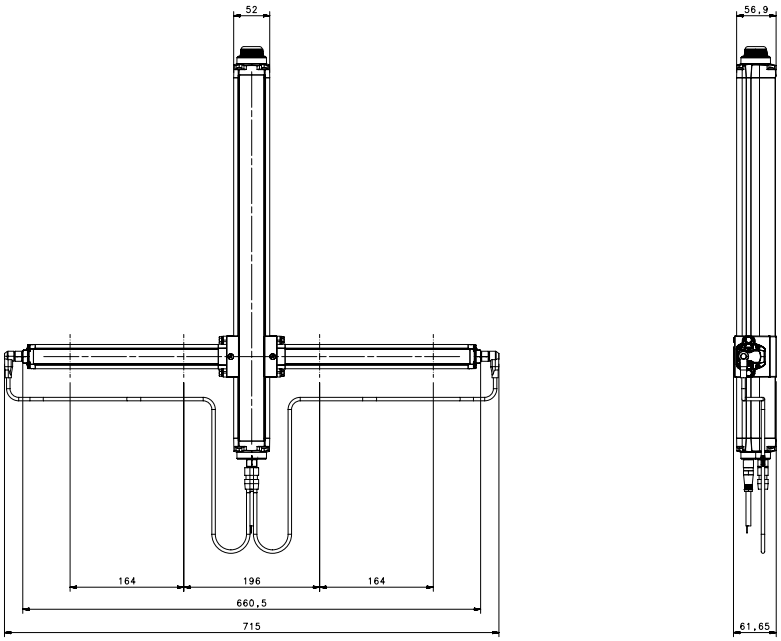

DIMENSIONS

SG BODY REFLECTOR MUTING WITH T MUTING ARMS - PASSIVE SIDE

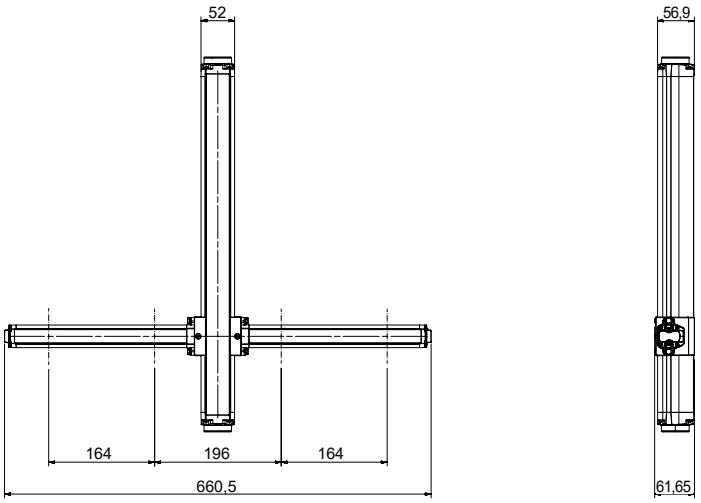

SG BODY REFLECTOR MUTING WITH L MUTING ARM

ACTIVE SIDE

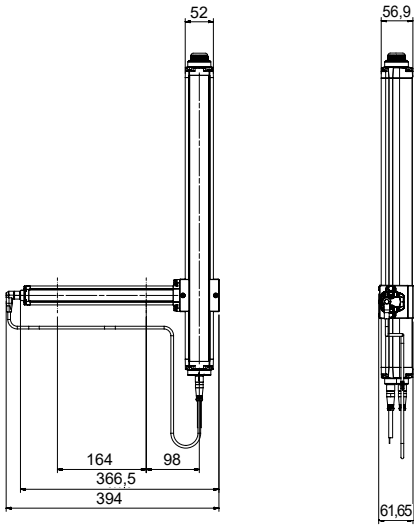

PASSIVE SIDE

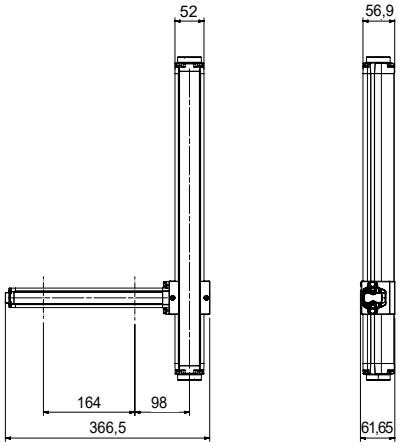

INDICATORS

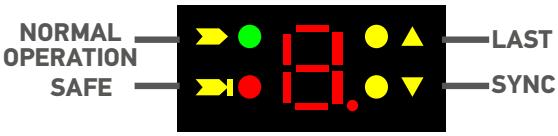

MODEL SELECTION AND ORDER INFORMATION

	SG4 BODY REFLECTOR BASE [SG4-RBX-XXX-OO-E]	ORDER NUMBER	SG4 BODY REFLECTOR MUTING [SG4-RBX-XXX-OO-W]	ORDER NUMBER	SG4-N BODY REFLECTOR MUTING [SG4-RBX-XXX-OO-N] + [SG4-RDBX]	ORDER NUMBER
ACTIVE SIDE	SG4-RB2-050-OO-E	957951000	**LINEAR (WITHOUT MUTING ARMS)**		**LINEAR (WITHOUT MUTING ARMS)**	
	SG4-RB3-080-OO-E	957951010	SG4-RB2-050-OO-W	957951030	SG4-RB2-050-OO-N	957951220
	SG4-RB4-090-OO-E	957951190	SG4-RB3-080-OO-W	957951040	SG4-RB3-080-OO-N	957951230
	SG4-RB4-120-OO-E	957951020	SG4-RB4-090-OO-W	957951180	SG4-RB4-090-OO-N	957951240
	---	---	SG4-RB4-120-OO-W	957951050	SG4-RB4-120-OO-N	957951250
	---	---	**WITH T MUTING ARMS**			
	---	---	SG4-RB2T-050-OO-W	957951080		
	---	---	SG4-RB3T-080-OO-W	957951090		
	---	---	**WITH L MUTING ARMS**			
	---	---	SG4-RB2L-050-OO-W	957951060		
	---	---	SG4-RB3L-080-OO-W	957951070		
	SG4 BODY REFLECTOR BASE [SG4-RDBX] [SG4-RDBX-XXX]	**ORDER NUMBER**	**SG4 BODY BIG MUTING [SG4-RDBX] [SG4-RDBXL/T]**	**ORDER NUMBER**	**SG4 BODY REFLECTOR BASE [SG4-RDBX] [SG4-RDBX-XXX]**	**ORDER NUMBER**
PASSIVE SIDE	SG4-RDB2	957951100	**LINEAR (WITHOUT MUTING ARMS)**			
	SG4-RDB3	957951110	SG4-RDB2	957951100	SG4-RDB2	957951100
	SG4-RDB4-090	957951170	SG4-RDB3	957951110	SG4-RDB3	957951110
	SG4-RDB4-120	957951120	SG4-RDB4-090	957951170	SG4-RDB4-090	957951170
	---	---	SG4-RDB4-120	957951120	SG4-RDB4-120	957951120
	---	---	**WITH T MUTING ARMS**			
	---	---	SG4-RDB2T	957951150		
	---	---	SG4-RDB3T	957951160		
	---	---	**WITH L MUTING ARMS**			
	---	---	SG4-RDB2L	957951130		
	---	---	SG4-RDB3L	957951140		

IMPORTANT NOTES

1) Active and passive sides must be ordered separately
2) Brackets are not included in the SG4 BODY REFLECTOR packing and must be ordered separately (see accessories table)

CABLES

	ACTIVE UNIT (MAIN CONNECTOR)	LENGTH (M)	ORDER CODE
SG4 BODY REFLECTOR BASE [SG4-RBX-XXX-OO-E]	CS-A1-06-U-03	3	95ASE1220
	CS-A1-06-U-05	5	95ASE1230
	CS-A1-06-U-10	10	95ASE1240
SG4-N BODY REFLECTOR MUTING [SG4-RBX-XXX-OO-N]	CS-A1-06-U-15	15	95ASE1250
	CS-A1-06-U-25	25	95ASE1260
	CS-A1-06-U-50	50	95A252710
SG4 BODY REFLECTOR MUTING [SG4-RBX-XXX-OO-W]	CS-A1-10-U-03	3	95A252720
	CS-A1-10-U-05	5	95A252730
	CS-A1-10-U-10	10	95A252740
	CS-A1-10-U-15	15	95A252750
	CS-A1-10-U-25	25	95A252760
	CS-A1-10-U-50	50	95A252770
	ACTIVE UNIT (SECONDARY CONNECTOR)	**LENGTH (M)**	**ORDER CODE**
SG4 BODY REFLECTOR MUTING [SG4-RBX-XXX-OO-W]	CS-A1-03-U-03	3	95ASE1170
	CS-A1-03-U-05	5	95ASE1180
	CS-A1-03-U-10	10	95ASE1190
	CS-A1-03-U-15	15	95ASE1200
	CS-A1-03-U-25	25	95ASE1210
	CS-A1-03-U-50	50	95A252700

NOTES

All cables have axial connectors

The company endeavours to continuously improve and renew its products; for this reason the technical data and contents of this catalogue may undergo variations without prior notice. For correct installation and use, the company can guarantee only the data indicated in the instruction manual supplied with the products.

SG2 MUTING
SG4 EXTENDED

State-of-the-art technology and versatility

Easily adaptable to the machine structure

Maximum application flexibility with configurable advanced functions

Complete diagnostic and monitoring online

- No dead zone
- Pigtail cable with M12 connector
- Cascade connection of up to 3 units
- Up to 20m operating range and 1800m protected height
- Compact dimensions (35 x 41 mm section)
- Anti-interference coding
- Integrated Muting function
- Floating Blanking, Fixed Blanking and Reduced Resolution
- Configurable with:
  - Autoteaching
  - Pushbuttons for common configuration
  - Graphic User Interface for complete parametrisation
- Ethernet Interface for programming, monitoring and error logging

APPLICATIONS

- Automatic machines Robots
- Automatic assembling lines
- Palletizers and Depalletizers

INDUSTRIES

- Food & Beverage
- Metalworking
- Automotive
- Wood
- Ceramics

	FINGER	HAND	ARM	BODY
Type 2		x		
Type 4	x	x		

SG4-14-030-00-P

TYPE	
2	Type 2
4	Type 4

MONITORED HEIGHT	
030	300 mm
045	450 mm
...	
180	1800 mm

RESOLUTION	
14	Finger: 14 mm (only Type 4)
30	Hand: 30 mm

VERSION	
W	Basic Configuration Mode
P	Cascadable Advanced Configuration Mode Programmable with GUI
N	SG4-N: muting function with single main connector

TECHNICAL DATA

	SG2 MUTING [SG2-30-xxx-00-W]	SG4 EXTENDED [SG4-xx-xxx-00-P]	SG4-N [SG4-xx-xxx-00-N]
GENERAL DATA			
Type (EN61496-1-2)	2	4	
PL (EN ISO 13849-1)	c	e	
SIL (IEC 61508)	1	3	
Resolution	30 mm	14, 30 mm	
Protected height	300 ... 1800 mm (with 150 mm steps)		
Operating distance	0.2 ... 20 m	0.2 ... 7 m (14 mm resolution) 0.2 ... 20 m (30 mm resolution)	
Dead Zone	No dead zone		
Cascade connection	---	Up to 3 units	---
ELECTRICAL DATA			
Power supply (Vdd)	24 Vdc ± 20		
Outputs	2 PNP, with short circuit protection 2 PNP		
Output current	0.5 A max/each output		
Capacitive load	2.2 uF @ 24Vdc max		
Response time	13 ... 22 ms depending on model *	13 ... 33 ms depending on model *	15 ... 33 ms depending on model *
Cables length (for power supply)	50 m max		
MECHANICAL AND ENVIRONMENTAL DATA			
Operating temperature	0 ...+50 °C		
Humidity	15 ... 95 % (no condensation)		
Mechanical protection	IP 65 (EN 60529)		
Housing Material	Painted aluminium, Polycarbonate, PBT		
Window material	PMMA		
FUNCTIONS			
	Test input		
	Manual/Automatic Restart		
	External Device Monitoring (EDM)		
	Anti-interference coding		
	Range reduction		
	T Muting/L Muting		
	---	Partial Muting	
	---	Filter on muting signals	
	Muting dependent Override		
	Floating Blanking		---
	Fixed Blanking		---
Max. Number of Blanking Areas	2	5	---
	---	Reduced Resolution	---

NOTES

* The response time depends on model; when a cascaded system is used, depends also on the number of units connected.
For detailed informations refer to related Product Datasheet or Manual.

1) The use of any type of blanking is not compatible with the use of Muting and Muting dependent Override.
2) In order to use Muting or Blanking with SG4 EXTENDED, the correct pigtail cable must be used (see accessories table)

CONNECTIONS

	SG2 MUTING [SG2-30-XXX-00-W]	SG4 EXTENDED [SG4-XX-XXX-00-P] CONFIGURATION FOR MUTING	SG4 EXTENDED [SG4-XX-XXX-00-P] CONFIGURATION FOR BLANKING	SG4-N [SG4-XX-XXX-00-N]
PIGTAIL CABLE FOR EMITTER*	CS-G1-50-B-002 (Order Number 95A252820)			
EMITTER	M12, 5 poles, male 1 = brown = 24Vdc; 2 = white = TEST; 3 = blue = 0V; 4 = black = EARTH; 5 = grey = RANGE REDUCTION.			
	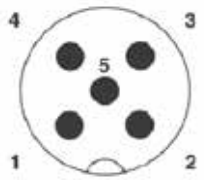			
PIGTAIL CABLE FOR RECEIVER [A]	CS -R1-75-B-002 (Order Number 95A252810)		CS -G1-70-B-002 (Order Number 95A252830)	CS -G1-60-B-002 (Order Number 95A252910)
RECEIVER MAIN CONNECTOR	M12, 12 poles, male 1 = brown = 24Vdc 2 = blue = 0V 3 = white = RESET/RESTART/ALIGN 4 = green = OVERRIDE1 5 = pink = OSSD2 6 = yellow = EDM 7 = black = MUTING DISABLE 8 = grey = OSSD1 9 = red = OVERRIDE2 10 = violet = MUTING LAMP 11 = grey-pink = OVERRIDE STATUS 12 = red-blue = EARTH		M12, 12 poles, male 1 = brown = 24Vdc 2 = blue = 0V 3 = white = RESET/RESTART/ALIGN 4 = green = TEACH IN 5 = pink = OSSD2 6 = yellow = EDM 8 = grey = OSSD1 9 = red = TOLERANCE 10 = violet = LAMP 12 = red-blue = EARTH	M12, 8 poles, male 1 = white = RESTART/RESET/EDM/ OVERRIDE 2 = brown = +24Vdc 3 = green = MUTING1 4 = yellow = MUTING2 5 = grey = OSSD1 6 = pink = OSSD2 7 = blue = 0Vdc 8 = red = MUTING LAMP
	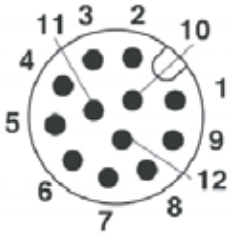			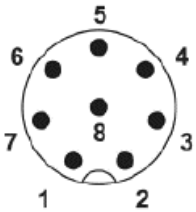
RECEIVER SECONDARY CONNECTOR	---		M12, 5 poles, male 1 = brown = 24Vdc 2 = white = MUTING2 3 = blue = 0V 4 = black = MUTING1	---
	---		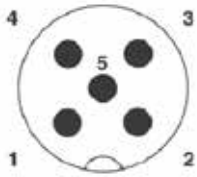	---

[A] IMPORTANT NOTES

1) The light curtain SG4 EXTENDED and SG2 MUTING are sold without pigtail cables : they must be ordered separately for Transmitter and Receiver : see the cable order codes table for further informations.
SG4-N are sold with pigtail cables included.

ACCESSORIES

	SG2 MUTING [SG2-30-XXX-00-W]	SG4 EXTENDED [SG4-XX-XXX-00-P]	SG4-N [SG4-XX-XXX-00-N]
BRACKETS			
Standard angled brackets (included)	ST-KSTD		
Antivibration support (4 pcs/6 pcs) *	ST-K4AV ST-K6AV		
Plastic brackets (4 pcs/6 pcs) *	ST-KP4MP ST-KP6MP		
Orientable brackets (4 pcs/6 pcs) *	ST-K4OR ST-K6OR		
STANDS			
Protective Stands	SG-PSB series		
Stand Plate for SG-PSB	SG-P		
Protective Stands Mounting Brackets (4 pcs/6 pcs) *	ST-PS4-SG-SE ST-PS6-SG-SE		
Floor columns	SE-S Series		
MIRRORS			
Deviating Mirrors	SG-DM Series		
Deviating Mirrors mounting kit for SG-PSB	ST-PS-DM		
Mirror Mounting Bracket	ST-DM		
SAFETY UNITS			
Safety Unit	SE-SR2		
EDM Relay Box **	CS ME-03VU24-Y14		
Safety control unit for single beams and SLC	SG-BWS-T4-MT		
ALIGNMENT TOOL			
LASER Pointer	SG-LP		
COMMUNICATION TOOLS			
Ethernet Adaptor (Dongle)	---	SG4-DONGLE	---
Ethernet Cable	---	CAB-ETH-M01	---
CONFIGURATION SOFTWARE			
Monitoring and Programming Software ***	SG EXTENDED Graphic User Interface ***		
MUTING ACCESSORIES			
External muting lamps	LMS series		

NOTES

* Use 6 brackets for light curtains with length ≥ 1200 mm

** When using EDM Relay Box, connect EDM input, and be sure EDM function is active on the safety light curtain

*** SG EXTENDED GUI is available from DATALOGIC website

DIMENSIONS

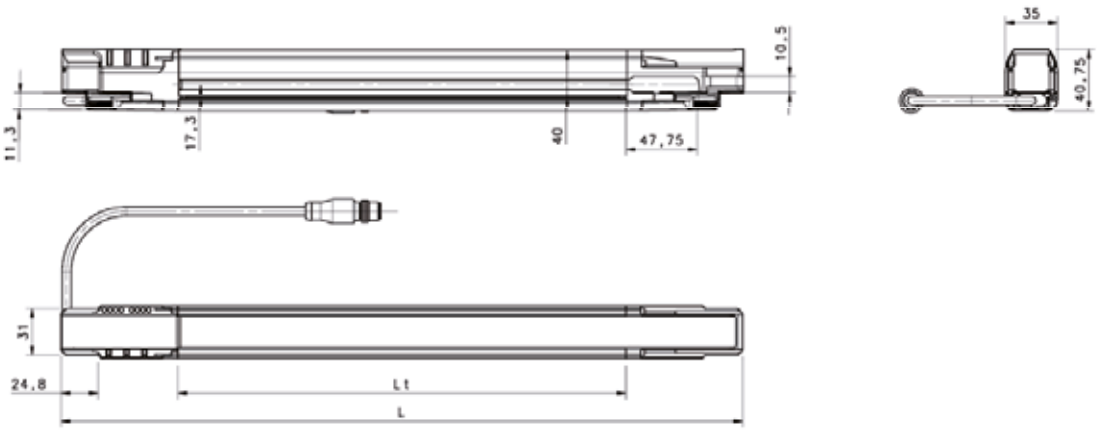

SG2 MUTING	SG4 EXTENDED	SG4-N	Lt (mm)	L (mm)
SG2-xx-030-00-W	SG4-xx-030-00-P	SG4-xx-030-00-N	150	306,3
SG2-xx-045-00-W	SG4-xx-045-00-P	SG4-xx-045-00-N	300	456,3
SG2-xx-060-00-W	SG4-xx-060-00-P	SG4-xx-060-00-N	450	606,3
SG2-xx-075-00-W	SG4-xx-075-00-P	SG4-xx-075-00-N	600	756,3
SG2-xx-090-00-W	SG4-xx-090-00-P	SG4-xx-090-00-N	750	906,3
SG2-xx-105-00-W	SG4-xx-105-00-P	SG4-xx-105-00-N	900	1056,3
SG2-xx-120-00-W	SG4-xx-120-00-P	SG4-xx-120-00-N	1050	1206,3
SG2-xx-135-00-W	SG4-xx-135-00-P	SG4-xx-135-00-N	1200	1356,3
SG2-xx-150-00-W	SG4-xx-150-00-P	SG4-xx-150-00-N	1350	1506,3
SG2-xx-165-00-W	SG4-xx-165-00-P	SG4-xx-165-00-N	1500	1656,3
SG2-xx-180-00-W	SG4-xx-180-00-P	SG4-xx-180-00-N	1650	1806,3

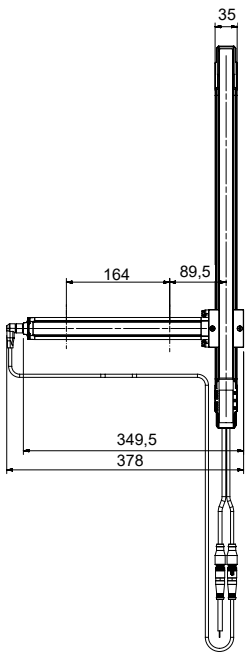

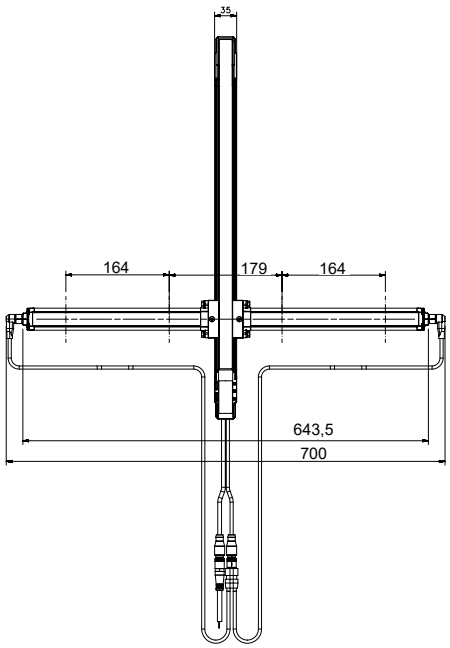

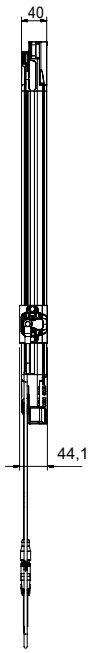

INDICATORS

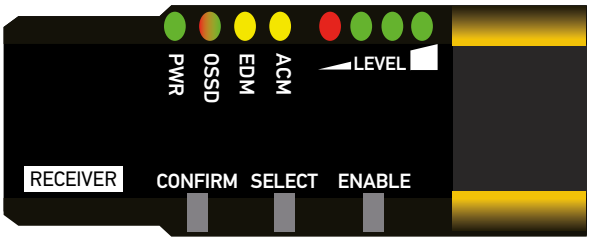

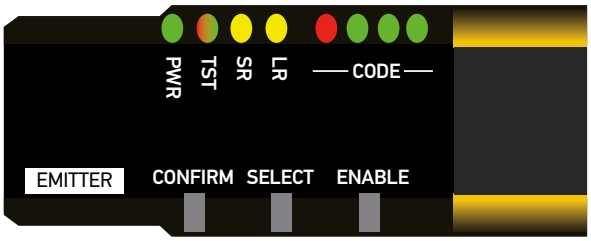

AVAILABLE MODELS AND ORDER CODES

	SG2 MUTING [SG2-30-XXX-00-W]	ORDER NUMBER	SG4 EXTENDED [SG4-XX-XXX-00-P]	ORDER NUMBER	SG4-N [SG4-XX-XXX-00-N]	ORDER NUMBER
FINGER PROTECTION	---		SG4-14-030-00-P	957901240	SG4-14-030-00-N	957902350
	---		SG4-14-045-00-P	957901250	SG4-14-045-00-N	957902360
	---		SG4-14-060-00-P	957901260	SG4-14-060-00-N	957902370
	---		SG4-14-075-00-P	957901270	SG4-14-075-00-N	957902380
	---		SG4-14-090-00-P	957901280	SG4-14-090-00-N	957902390
	---		SG4-14-105-00-P	957901290	SG4-14-105-00-N	957902400
	---		SG4-14-120-00-P	957901300	SG4-14-120-00-N	957902410
	---		SG4-14-135-00-P	957901310	SG4-14-135-00-N	957902420
	---		SG4-14-150-00-P	957901320	SG4-14-150-00-N	957902430
	---		SG4-14-165-00-P	957901330	SG4-14-165-00-N	957902440
	---		SG4-14-180-00-P	957901340	SG4-14-180-00-N	957902450
HAND PROTECTION	SG2-30-030-00-W	957801700	SG4-30-030-00-P	957901350	SG4-30-030-00-N	957902460
	SG2-30-045-00-W	957801710	SG4-30-045-00-P	957901360	SG4-30-045-00-N	957902470
	SG2-30-060-00-W	957801720	SG4-30-060-00-P	957901370	SG4-30-060-00-N	957902480
	SG2-30-075-00-W	957801730	SG4-30-075-00-P	957901380	SG4-30-075-00-N	957902490
	SG2-30-090-00-W	957801740	SG4-30-090-00-P	957901390	SG4-30-090-00-N	957902500
	SG2-30-105-00-W	957801750	SG4-30-105-00-P	957901400	SG4-30-105-00-N	957902510
	SG2-30-120-00-W	957801760	SG4-30-120-00-P	957901410	SG4-30-120-00-N	957902520
	SG2-30-135-00-W	957801770	SG4-30-135-00-P	957901420	SG4-30-135-00-N	957902530
	SG2-30-150-00-W	957801780	SG4-30-150-00-P	957901430	SG4-30-150-00-N	957902540
	SG2-30-165-00-W	957801790	SG4-30-165-00-P	957901440	SG4-30-165-00-N	957902550
	SG2-30-180-00-W	957801800	SG4-30-180-00-P	957901450	SG4-30-180-00-N	957902560

NOTES

* The light curtain SG4 EXTENDED and SG2 MUTING are sold without pigtail cables : they must be ordered separately for Transmitter and Receiver.
In case of SG4 EXTENDED, the choice of the Receiver pigtail determines in Muting configuration or Blanking configuration.
For cascade configurations, other cables are avilable to connect the cascaded units: refer to accessories table.

CABLE ORDER CODES

PIGTAIL CABLES/INTERFACE SELECTION TABLE				
		PIGTAIL CABLE/INTERFACE	LENGTH (m)	ORDER CODE
SG2 MUTING [SG2-30-XXX-00-W]	TRANSMITTER	CS-G1-50-B-002	0.2	95A252820
	RECEIVER	CS-R1-75-B-002	0.2	95A252810
SG4 EXTENDED [SG4-XX-XXX-00-P]	TRANSMITTER	CS-G1-50-B-002	0.2	95A252820
	RECEIVER	BLANKING CONFIGURATION		
		CS-G1-70-B-002	0.2	95A252830
		MUTING CONFIGURATION		
		CS-R1-75-B-002	0.2	95A252810
		DONGLE		
		SG4-DONGLE	---	95ASE2080

NOTES

1) The light curtain is sold without pigtail cables: they must be ordered separately for Transmitter and Receiver.

2) For SG4 EXTENDED, the pigtail cable used determines if the light curtain will work in Muting configuration or in Blanking configuration. If, in place of the pigtail cable, the Dongle is used for receiver, the light curtain can work in both configurations. When muting and blanking are not needed, Dongle or pigtail cable CS-G1-70-B-002 are suggested

3) If SG4 EXTENDED receiver is connected to the programming and monitoring interface (DONGLE), the pigtail cable for Receiver isn't needed.

4) In order to install SG4 EXTENDED or SG2 MUTING in place of SE series safety light curtains, without changing any wiring, it can be used the cable CS-G1-60-B-002 (order n. 95A252910) for receiver. All functions of SE will be available, except Override.

CS-G1-50-B-002

CS-G1-70-B-002

CS-R1-75-B-002

CABLES SELECTION TABLE			
	TRANSMITTER/RECEIVER SECONDARY CONNECTOR	LENGTH (m)	ORDER CODE
	CS-A1-03-U-03	3	95ASE1170
	CS-A1-03-U-05	5	95ASE1180
	CS-A1-03-U-10	10	95ASE1190
	CS-A1-03-U-15	15	95ASE1200
	CS-A1-03-U-25	25	95ASE1210
	CS-A1-03-U-50	50	95A252700
	RECEIVER MAIN CONNECTOR	LENGTH (m)	ORDER CODE
SG2 MUTING [SG2-30-XXX-00-W] SG4 EXTENDED [SG4-XX-XXX-00-P]	CS-A1-10-U-03	3	95A252720
	CS-A1-10-U-05	5	95A252730
	CS-A1-10-U-10	10	95A252740
	CS-A1-10-U-15	15	95A252750
	CS-A1-10-U-25	25	95A252760
	CS-A1-10-U-50	50	95A252770
SG4-N [SG4-XX-XXX-00-N]	CS-A1-06-U-03	3	95ASE1220
	CS-A1-06-U-05	5	95ASE1230
	CS-A1-06-U-10	10	95ASE1240
	CS-A1-06-U-15	15	95ASE1250
	CS-A1-06-U-25	25	95ASE1260
	CS-A1-06-U-50	50	95A252710

CASCADE CABLES		
MODEL	LENGTH (m)	ORDER CODE
CS-F1-80-B-01	1	95A252840
CS-F1-80-B-005	0.5	95A252850
CS-F1-80-B-0005	0.05	95A252860

ETHERNET CABLES		
MODEL	LENGTH (m)	ORDER CODE
CAB-ETH-M01 M12-IP67	1	93A051346
CAB-ETH-M03 M12-IP67	3	93A051347
CAB-ETH-M05 M12-IP67	5	93A051348

Rev. 07, 05/2020

The company endeavours to continuously improve and renew its products; for this reason the technical data and contents of this catalogue may undergo variations without prior notice. For correct installation and use, the company can guarantee only the data indicated in the instruction manual supplied with the products.

SG4 FIELDBUS

DATALOGIC

WARRANTY 3 YEARS

First safety light curtain with integrated openSAFETY over POWERLINK

Fast and easy installation, configuration and maintenance

Complete diagnostic and monitoring available over the communication bus

Basic models: classic functions available

Advanced models: each beam status safe information available

- Two M12 connectors on receiver side for POWERLINK connection
- M8 connectors on emitter and receiver for power supply
- Up to 19m operating range and 1800m protected height
- Finger, hand and body protection
- Compact dimensions (35 x 42 mm section)
- POWERLINK node address configurable with selector switches
- Functions available in combination with B&R safety controller SL and SLX: auto/manual restart, EDM, Muting, Override
- Functions available for advanced models in combination with B&R safety controller SL: fixed blanking, floating blanking, partial and dynamic muting, warning areas, measurement

c UL US LISTED

APPLICATIONS

- Automatic and semi-automatic machines and lines
- Primary packaging machinery (packing, filling, labelling, etc...)
- Cutting machinery
- Bending and metal-working machines
- Material handling machinery
- Palletizers and depalletizers
- Material handling
- Robots cells

INDUSTRIE

- Food & Beverage, Metalworking, Automotive, Wood, Ceramics

	FINGER	HAND	ARM	BODY
Type 2				
Type 4	x	x		x

SG4-14-015-OP-A

TYPE	
4	Type 4

RESOLUTION	
14	Finger: 14 mm
30	Hand: 30 mm

MONITORED HEIGHT	
015	150 mm
030	300 mm
...	
180	1800 mm

FIELDBUS PROTOCOL	
OP	openSAFETY over POWERLINK

FUNCTIONALITY	
A	Advanced
B	Basic

SG4-S2-060-OP-B

TYPE	
4	Type 4

BEAMS	
2	2 Beams
3	3 Beams
4	4 Beams

MONITORED HEIGHT	
060	600 mm
080	800 mm
090	900 mm
120	1200 mm

FIELDBUS PROTOCOL	
OP	openSAFETY over POWERLINK

FUNCTIONALITY	
B	Basic

TECHNICAL DATA

SG4 FIELDBUS		
	Finger and Hand resolution [SG4-xx-xxx-OP-x]	Body detection [SG4-Sx-xxx-OP-x]
GENERAL DATA		
Type (EN61496-1)	4	
PL (EN ISO 13849-1)	e	
SIL (IEC 61508)	3	
Resolution	14 mm[SG4-14-xxx-OP-x] 30 mm [SG4-30-xxx-OP-x]	2 beams [SG4-S2-xxx-OP-x] 3 beams [SG4-S3-xxx-OP-x] 4 beams [SG4-S4-xxx-OP-x]
Protected height	150 ...1800 mm (with 150 mm steps)	600 / 800 / 900 / 1200 mm
Operating distance	0.2 ... 6 m [SG4-14-xxx-OP-x] 0.2 ... 19 m [SG4-30-xxx-OP-x]	0.2 ...19 m
ELECTRICAL DATA		
Power supply (Vdd)	24 Vdc ± 20%	
Consumption (Transmitter)	3 W max	
Consumption (Receiver)	5 W max	
Response time	see response time table	
Power supply cable length	50 m max	
Ethernet cable length	100 m max	
MECHANICAL AND ENVIRONMENTAL DATA		
Operating temperature	0 ...+50 °C	
Humidity	15 ... 95 % (no condensation)	
Mechanical protection	IP 65 (EN 60529)	
Housing material	Painted aluminium, Polycarbonate	
Window material	PMMA	
FUNCTIONS		
SG4 FIELDBUS can only be used in combination with a safety PLC to which it transmits safety information about its status through openSAFETY over POWERLINK. BASE models transmit only their ON/OFF status, ADVANCED models transmit also each beam status. Using appropriate functional blocks or instructions inside the safety PLC it is possible to implement the following functions:		
BASE MODELS [SG4-xx-xxx-OP-B] *ADVANCED MODELS [SG4-xx-xxx-OP-A]*	Automatic/Manual restart	
	External Device Monitoring	
	Total Muting	
ADVANCED MODELS [SG4-xx-xxx-OP-A]	Partial muting	
	Auto dynamic Partial muting	
	Fixed Blanking	
	Floating Blanking	
	Measurement	

MODEL	RESPONSE TIME (ms)
SG4-14-015-OP-B	19
SG4-14-030-OP-B	22
SG4-14-045-OP-B	25
SG4-14-060-OP-B	29
SG4-14-075-OP-B	31
SG4-14-090-OP-B	35
SG4-14-105-OP-B	38
SG4-14-120-OP-B	41
SG4-14-135-OP-B	44
SG4-14-150-OP-B	47
SG4-14-165-OP-B	51
SG4-14-180-OP-B	54
SG4-30-015-OP-B	19
SG4-30-030-OP-B	21
SG4-30-045-OP-B	22
SG4-30-060-OP-B	24
SG4-30-075-OP-B	25
SG4-30-090-OP-B	27
SG4-30-105-OP-B	29
SG4-30-120-OP-B	31
SG4-30-135-OP-B	32
SG4-30-150-OP-B	34
SG4-30-165-OP-B	36
SG4-30-180-OP-B	38
SG4-S2-060-OP-B	24
SG4-S3-080-OP-B	27
SG4-S4-090-OP-B	27
SG4-S4-120-OP-B	31

NOTE

The response time reported in this table is the part of the communication time depending only by the light curtain.
Additional time must be added, depending on configurable parameters of the POWERLINK network and safety PLC.

CONNECTIONS

	CN1	CN2	CN3
RECEIVER	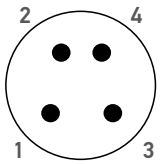 POWER CONNECTOR: M8 4-pin male	POWERLINK CONNECTOR: M12 D-coded female Ethernet	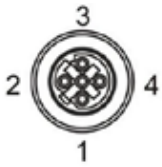 POWERLINK CONNECTOR: M12 D-coded female Ethernet
EMITTER	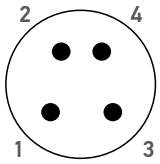 POWER CONNECTOR: M8 4-pin male		

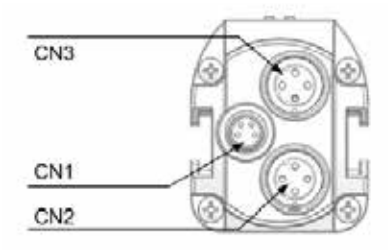

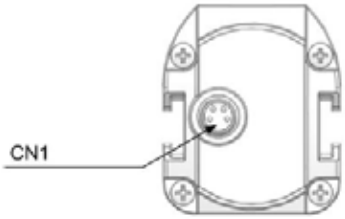

CN1	SIGNAL	DESCRIPTION
1	24 Vdc (BROWN)	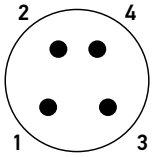 POWER CONNECTOR
2	NOT USED (WHITE)	
3	0 Vdc (BLUE)	
4	NOT USED (BLACK)	

CN2	SIGNAL	DESCRIPTION
1	TxD+, transmit data +	ETHERNET POWERLINK PORT 1
2	RxD+, receive data +	
3	TxD-, transmit data -	
4	RxD-, receive data -	

INDICATORS

Receiver

Emitter

LED	COLOR	NAME	FUNCTION (NORMAL OPERATION)	FUNCTION (ERROR)
➡	Red/Green	BEAM STATUS	Red On: At least one beam intercepted Green On: All beams free	Red On
▼	Yellow	SYNC BEAM	On: First beam intercepted or not aligned	Blinking: OPTIC , uP or openSAFETY ERROR
▲	Yellow	LAST BEAM	On: Last beam intercepted or not aligned	
M	Red	MASTER uP STATUS	Off: Normal operation Blinking : Boot or pre-op	On: Error on MASTER uP Boot or Pre-op
P	Red/Green	POWERLINK STATUS	Green On: normal operation Green blinking: pre-op	Red On: Ethernet Powerlink Error
1	Green	EPL PORT 1 LINK	On: there is a link Blinking: there is activity on this link	N/A
2	Green	EPL PORT 2 LINK	On: there is a link Blinking: there is activity on this link	N/A
S	Red	SLAVE uP STATUS	Off: Normal operation Blinking: Boot or pre-op	On: Error on SLAVE uP Boot Pre-op

DIMENSIONS

OVERALL DIMENSIONS SG4 FIELDBUS

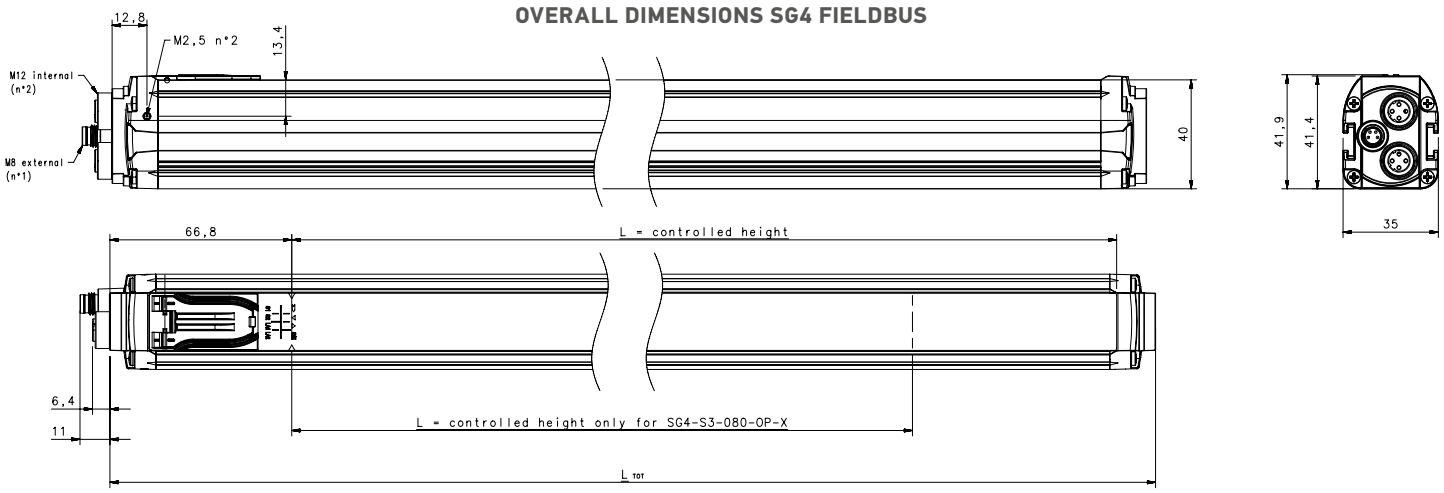

OVERALL DIMENSIONS SG4 FIELDBUS WITH ST-KSTD FIXING BRACKET

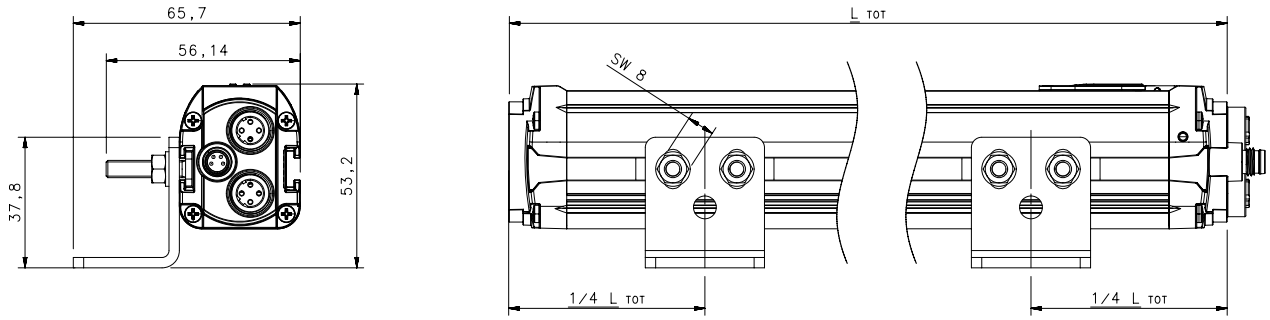

OVERALL DIMENSIONS SG4 FIELDBUS WITH ST-K4-ROT-OP FIXING BRACKET

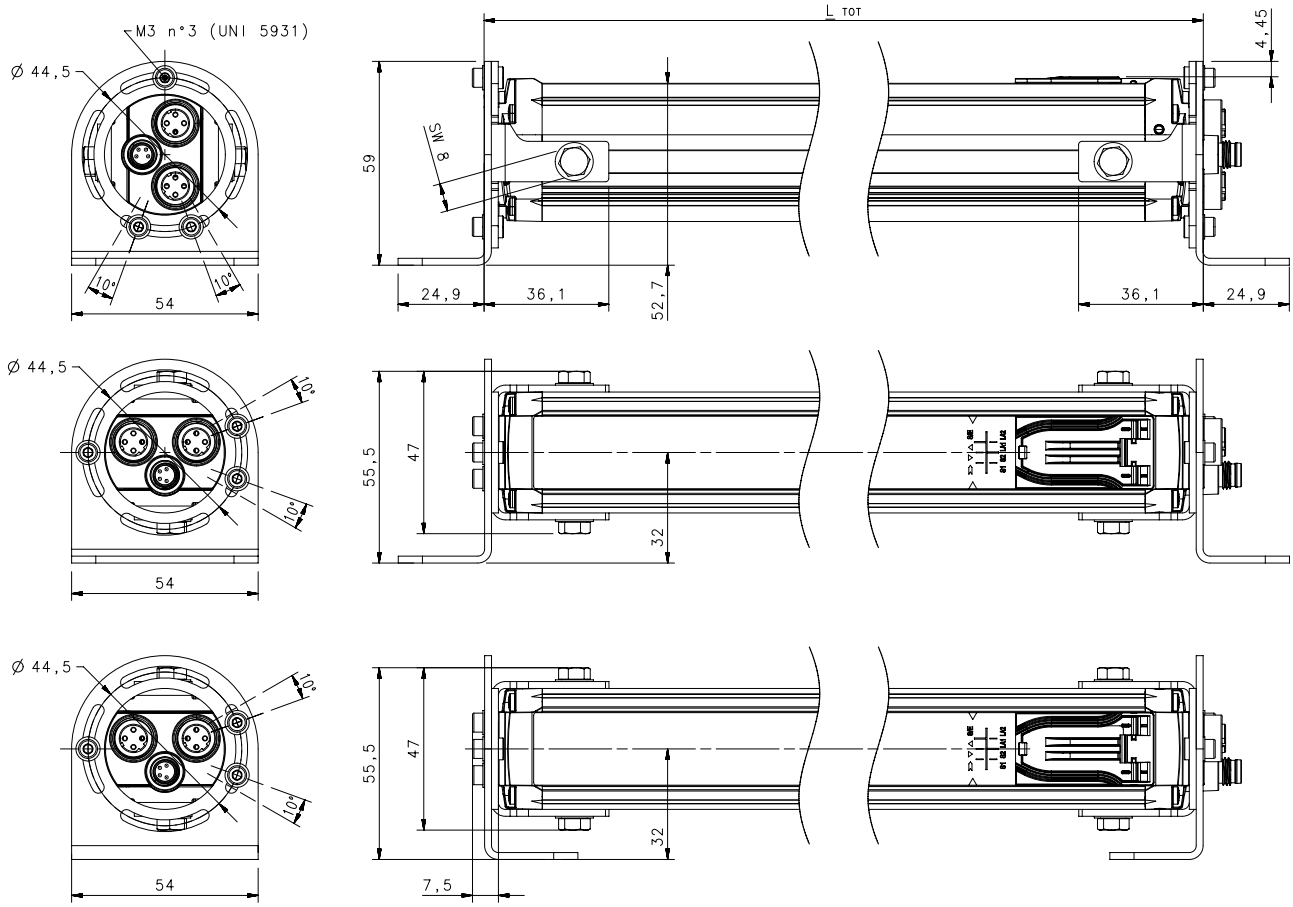

MODEL SELECTION AND ORDER INFORMATION

	Basic functionality [SG4-xx-xxx-OP-B] [SG4-Sx-xxx-OP-B]	Order Number	Advanced functionality [SG4-xx-xxx-OP-A]	Order Number
FINGER PROTECTION	SG4-14-015-OP-B	957901770	SG4-14-015-OP-A	957902050
	SG4-14-030-OP-B	957901780	SG4-14-030-OP-A	957902060
	SG4-14-045-OP-B	957901790	SG4-14-045-OP-A	957902070
	SG4-14-060-OP-B	957901800	SG4-14-060-OP-A	957902080
	SG4-14-075-OP-B	957901810	SG4-14-075-OP-A	957902090
	SG4-14-090-OP-B	957901820	SG4-14-090-OP-A	957902100
	SG4-14-105-OP-B	957901830	SG4-14-105-OP-A	957902110
	SG4-14-120-OP-B	957901840	SG4-14-120-OP-A	957902120
	SG4-14-135-OP-B	957901850	SG4-14-135-OP-A	957902130
	SG4-14-150-OP-B	957901860	SG4-14-150-OP-A	957902140
	SG4-14-165-OP-B	957901870	SG4-14-165-OP-A	957902150
	SG4-14-180-OP-B	957901880	SG4-14-180-OP-A	957902160
HAND PROTECTION	SG4-30-015-OP-B	957901890	SG4-30-015-OP-A	957902170
	SG4-30-030-OP-B	957901900	SG4-30-030-OP-A	957902180
	SG4-30-045-OP-B	957901910	SG4-30-045-OP-A	957902190
	SG4-30-060-OP-B	957901920	SG4-30-060-OP-A	957902200
	SG4-30-075-OP-B	957901930	SG4-30-075-OP-A	957902210
	SG4-30-090-OP-B	957901940	SG4-30-090-OP-A	957902220
	SG4-30-105-OP-B	957901950	SG4-30-105-OP-A	957902230
	SG4-30-120-OP-B	957901960	SG4-30-120-OP-A	957902240
	SG4-30-135-OP-B	957901970	SG4-30-135-OP-A	957902250
	SG4-30-150-OP-B	957901980	SG4-30-150-OP-A	957902260
	SG4-30-165-OP-B	957901990	SG4-30-165-OP-A	957902270
	SG4-30-180-OP-B	957902000	SG4-30-180-OP-A	957902280
BODY PROTECTION	SG4-S2-060-OP-B	957902010	--	--
	SG4-S3-080-OP-B	957902020	--	--
	SG4-S4-090-OP-B	957902030	--	--
	SG4-S4-120-OP-B	957902040	--	--

CABLES

	POWER SUPPLY CABLES		
	MODEL	LENGTH (m)	ORDER CODE
M8 AXIAL CONNECTOR	CS-B1-02-G-03	3	95A251420
	CS-B1-02-G-05	5	95A251430
	CS-B1-02-G-07	7	95A251440
	CS-B1-02-G-10	10	95A251480
M8 RADIAL CONNECTOR	CS-B2-02-G-03	3	95A251450
	CS-B2-02-G-05	5	95A251460
	CS-B2-02-G-07	7	95A251470
	CS-B2-02-G-10	10	95A251530
	POWERLINK CABLES		
M12 AXIAL - RJ45	CAB-ETH-M01	1	93A051346
	CAB-ETH-M03	3	93A051347
	CAB-ETH-M05	5	93A051348
	CAB-ETH-M10	10	93A051391
M12 AXIAL - M12	ETH CABLE M12-M12 1M	1	93A050065
	ETH CABLE M12-M12 3M	3	93A050066
	ETH CABLE M12-M12 5M	5	93A050067

ACCESSORIES

	SG4 FIELDBUS [SG4-14-xxx-OP-x] [SG4-30-xxx-OP-x]	SG4 FIELDBUS [SG4-Sx-xxx-OP-x]
BRACKETS		
Standard angled brackets (included)	ST-KSTD	
Antivibration support (4 pcs / 6 pcs)*	ST-K4AV ST-K6AV	
Plastic brackets (4 pcs / 6 pcs)*	ST-KP4MP ST-KP6MP	
Orientable brackets (4 pcs)	ST-K4ROT-OP	
STANDS		
Protective Stands	SG-PSB series	
Stand Plate for SG-PSB	SG-P	
Protective Stands Mounting Brackets (4 pcs / 6 pcs)*	ST-PS4-SG-SE ST-PS6-SG-SE	
Floor columns	SE-S Series	
MIRRORS		
Protective stands with single mirrors	--	SG-PSM series
Deviating Mirrors	SG-DM Series	
Deviating Mirrors mounting kit for SG-PSB	ST-PS-DM	
Mirror Mounting Bracket	ST-DM	
ALIGNMENT TOOL		
LASER Pointer	SG-LP	

NOTES
* Use 6 brackets for light curtains with length >= 1200 mm

COMPATIBILITY WITH B&R HARDWARE AND SOFTWARE

Due to the characteristics of the functional blocks that have been developed by B&R in order to communicate with DATALOGIC SG4 FIELDBUS safety light curtains, always check to have the following versions or newer:

1) SG4 Fieldbus Base:
HW: SafeLOGIC SL81xx, SLXxxx
SW: SafetyRelease 1.10, SafeDESIGNER 4.2.x, Automation Studio 4.2.8.x, SL Upgrades 1.10.x.x

2) SG4 Fieldbus Advanced:
HW: SL81xx only
SW: SafetyRelease 1.10, SafeDESIGNER 4.3.3, Automation Studio 4.3.3, SL Upgrades 1.10.2.x

Rev. 07, 05/2020

DATALOGIC PRODUCT OFFERING

Sensors

Hand Held scanners

Mobile Computers

Laser Marking Systems

Vision Systems

Stationary Industrial Scanners

Safety Laser Scanner

RFID Systems

The company endeavours to continuously improve and renew its products; for this reason the technical data and contents of this catalogue may undergo variations without prior notice. For correct installation and use, the company can guarantee only the data indicated in the instruction manual supplied with the products.

SINGLE BEAM SAFETY SENSORS
SAFETY CONTROL UNITS

Installation Flexibility

Long distance

Low temperature with defogging function

4 safety areas controlled with one unit

Double muting

SENSORS:
- Emitter-receiver photocells with test input
- Type 2 and Type 4 models
- Plastic tubular and MAXI formats
- Up to 50m operating distance
- Class 1 red laser emission models up to 40
- Standard M12 connectors

CONTROL UNITS:
- Integrated control of 4 single beams and 2 light curtains
- Simple DIP Swicth configuration
- Muting functions can be assigned to light curtains or single beams

APPLICATIONS

- Robots
- Automatic assembling lines
- Palletizers and Depalletizers

S5-5-G8-62-SG-ST2

EMITTER/RECEIVER	
G8-62	Emitter
F8-92	Receiver

TYPE	
2	Type 2
4	Type 4

SL5-5-G-82-SG-ST4

EMITTER/RECEIVER	
G-82	Emitter
F-92	Receiver

S300-PR-5-G00-EX-M-SG-ST2

EMITTER/RECEIVER	
G00-EX	Emitter
F00-OC	Receiver

DEFOGGING FUNCTION	
...	Standard
M	Defogging

TYPE	
2	Type 2
4	Type 4

TECHNICAL DATA

	S5	SL5	S300
GENERAL DATA			
Format	M18 Tubular		Rectangular
Light Emission	Infrared LED 880 nm	Class 1 Red laser (650 nm)	Infrared LED 880 nm
Type (EN61496-1)	2/4 depending on model	4	2/4 depending on model
Effective Aperture Angle (EN61496-2)	-/+ 2.5° for Type 4 models -/+ 5° for Type 2 models		
Operating distance	0 ... 8 m	0 ... 40 m	0 ... 50 m (S300...ST2) 9 ... 40 m (S300...ST4)
ELECTRICAL DATA			
Power supply (Vdc)	24 Vdc ± 15%		
Outputs	PNP (short circuit protection)		
Output current	100 mA max.		
Response time	1 ms max.		
MECHANICAL AND ENVIRONMENTAL DATA			
Operating temperature	-25 ... 55°C	-10 ... 50 °C	-40 ... 55 °C
Mechanical protection (EN 60529)	IP 67		
Housing Material	Polycarbonate, ABS		PBT
Window material	PMMA		Polycarbonate

	SG-BWS-T4	SG-BWS-T4-2	SG-BWS-T4-MT	SG-BWS-T4-2-MT
GENERAL DATA				
PL (EN ISO 13849-1)	e			
SIL (IEC 61508)	3			
ELECTRICAL DATA				
Power supply	24 Vdc -15/+10%			
PNP Outputs from S5/SL5/S300	4			
OSSDs couples from SLC	---		2	
Muting inputs	---		4	
Test, Reset, Override, EDM, Muting enable, Auto/Man Selector	3		9	
Outputs				
Safety outputs	2 PNP		2 NO	
Muting lamps	---		2	
Test outputs	4		4	
Response time [A]	29 ms	33 ms	35 ms	39 ms
MECHANICAL AND ENVIRONMENTAL DATA				
Operating temperature	0 ... +55°C			
Humidity	15 ... 95 % (no condensation)			
Mechanical protection	IP20			
FUNCTIONS [B]				
Single beams pairs (Rx/Tx) monitored	4	8	4	8
	Automatic/Manual reset			
	External Device Monitoring			
	---		L/T Muting	
	---		Double muting	
	---		Muting Enable	
	---		Muting timeout	
	---		Override	
COMPATIBILITY				
Single beam photocells	S5/SL5/S300			
Safety light curtains	---		All DATALOGIC SLC	

NOTES

[A] includes response time of photocells

[B] Functions setting is done through DIP switches in SG-BWS-T4-MT and through wiring in SG-BWS-T4

CONNECTIONS

	EMITTER	RECEIVER
S5 SL5 S300	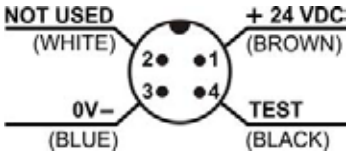	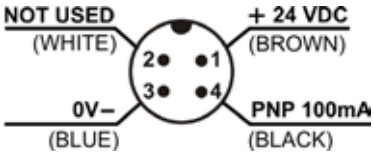

DIMENSIONS (mm)

S5

S5-5-F8-SG-ST2

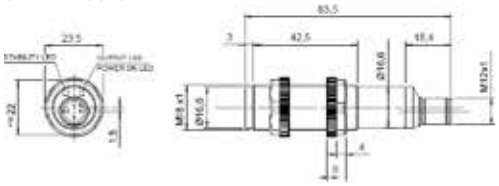

S5-5-G8-62-SG-ST2

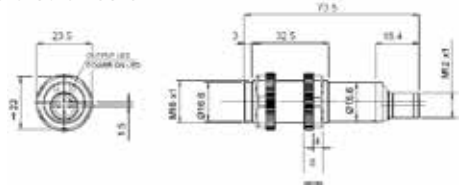

S5-5-F8-92-SG-ST4

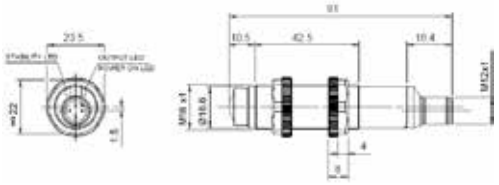

S5-5-G8-62-SG-ST4

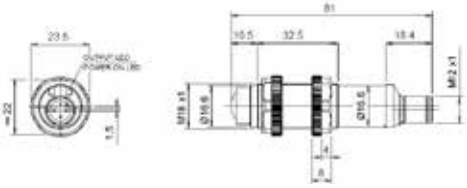

SL5

SL5-5-F-92-SG-ST4

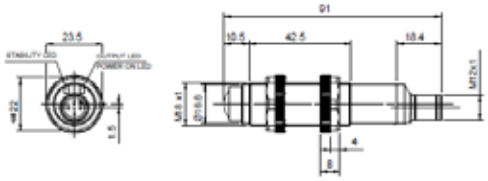

SL5-5-G-82-SG-ST4

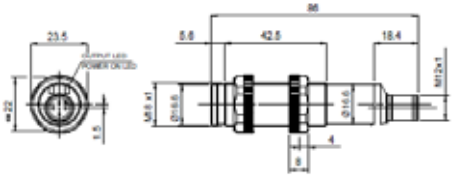

S300

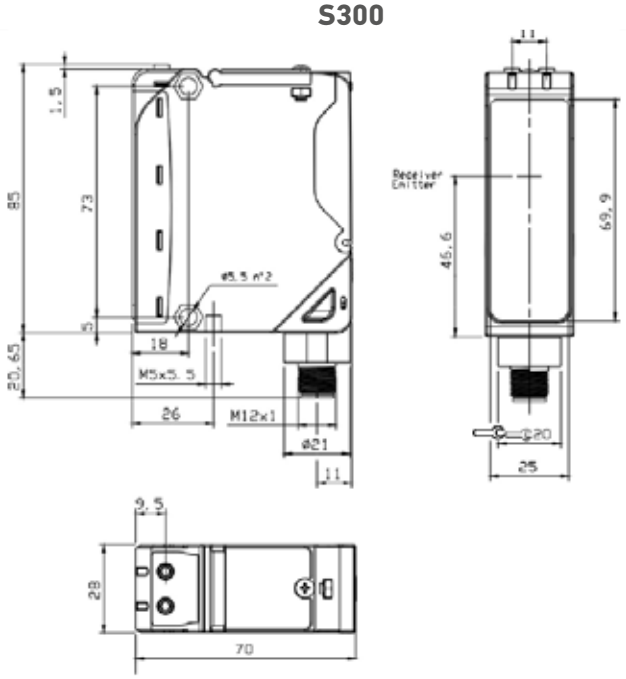

ACCESSORIES

MODEL	DESCRIPTION	ORDER NUMBER
SP-40	Fixed support for tubular M18 sensors	95ACC1370
SWING-18	Adjustable support for plastic tubular M18 sensors	895000006
MICRO-18	Support with micrometric regulation for tubular M18 sensors	95ACC1380
ST-5099	S300 Fixed bracket	95ACC2830
ST-5100	S300 Fixed bracket	95ACC2840
DataVS-MK-01	S300 Mounting kit	95A901380

ORDER CODES

SAFETY CONTROL UNITS		
MODEL	DESCRIPTION	ORDER NUMBER
SG-BWS-T4	Safety control unit pl=e auto/man edm, 4 beams	957051000
SG-BWS-T4-2	Safety control unit pl=e auto/man edm, 8 beams	957051030
SG-BWS-T4-MT	Safety control unit pl=e double muting, 4 beams	957051010
SG-BWS-T4-MT-2	Safety control unit pl=e double muting, 8 beams	957051040

SINGLE BEAM SAFETY SENSORS				
	TYPE	MODEL	EMITTER/RECEIVER	ORDER NUMBER
S5	2	S5-5-G8-62-SG-ST2	Emitter	952051870
		S5-5-F8-92-SG-ST2	Receiver	952051890
	4	S5-5-G8-62-SG-ST4	Emitter	952051910
		S5-5-F8-92-SG-ST4	Receiver	952051930
SL5	4	SL5-5-G-82-SG-ST4	Emitter	952501160
		SL5-5-F-92-SG-ST4	Receiver	952501170
S300	2	S300-PR-5-G00-EX-SG-ST2	Emitter	951451320
		S300-PR-5-F00-OC-SG-ST2	Receiver	951451340
	4	S300-PR-5-G00-EX-SG-ST4	Emitter	951451360
		S300-PR-5-F00-OC-SG-ST4	Receiver	951451380
S300 DEFOGGING	2	S300-PR-5-G00-EX-M-SG-ST2	Emitter	951451330
		S300-PR-5-F00-OC-M-SG-ST2	Receiver	951451350
	4	S300-PR-5-G00-EX-M-SG-ST4	Emitter	951451370
		S300-PR-5-F00-OC-M-SG-ST4	Receiver	951451390

1) The photocells listed above are certified and must be used only with safety control units SG-BWS-T4 and SG-BWS-T4-MT.
Neither technical and functioning compatibility nor certifications are guaranteed if they are used with other brand control units or old/obsolete DATALOGIC control units.

CABLE ORDER CODES

MODEL	DESCRIPTION	ORDER NUMBER
CS -A1-02-U-03	4-pole M12 cable (axial) 3 m	95ASE 1120
CS -A1-02-U-05	4-pole M12 cable (axial) 5 m	95ASE 1130
CS -A1-02-U-10	4-pole M12 cable (axial) 10 m	95ASE 1140
CS -A1-02-U-15	4-pole M12 cable (axial) 15 m	95ASE 1150
CS -A1-02-U-25	4-pole M12 cable (axial) 25 m	95ASE 1160

Rev. 07, 05/2020

The company endeavours to continuously improve and renew its products; for this reason the technical data and contents of this catalogue may undergo variations without prior notice. For correct installation and use, the company can guarantee only the data indicated in the instruction manual supplied with the products.

SAFETY LASER SCANNER

DATALOGIC
EMPOWER YOUR VISION

LASER SENTINEL™ ENHANCED

DATALOGIC

Safety laser scanner based on Time Of Flight measurement
More than 72 m² safely monitored, with 5.5 m over 275°
High detection performances in compact size
Advanced dust filtering
Easy programming with intuitive Graphic User Interface

- Dimensions (w,d,h): 102 , 112.5, 152 mm
- I/O connection with standard M12 cables
- Up to 3 simultaenous safety zones
- 2 Warning zones up to 40 m
- 30/40/50/70/150 mm selectable detection capability
- Up to 70 zone sets
- Partial dynamic muting
- Metal brackets allowing full orientation and fast replacement
- Advanced measurement data protocol
- Colour graphic display for monitoring and diagnostics
- Speed measurement with encoder inputs

APPLICATIONS

- Robot cells (pick and place, inspection, testing, welding, etc)
- Palletizers / depalletizers
- Open machinery, process lines
- Automated Guided Vehicles (AGV)
- Automated Guided Carts (AGC)
- Mobile Industrial Robots

INDUSTRIES

- Automotive
- Material handling
- Secondary Packaging
- Food
- Wood
- Ceramics

	FINGER	HAND	ARM	BODY
Type 3		x	x	x

SLS M 5 - E - 0812 - E

MODEL	
SA	Standalone
M	Master
R	Slave (or Remote)

MAX SAFETY RANGE	
5	5.5 m
3	3 m

ENCODER INPUTS	
E	Encoder inputs on secondary connector
--	Not present

I/O CONNECTORS	
08	M12 8-pin male
0812	M12 8-pin male OR M12 12-pin male
1708	M12 17-pin male AND M12 8-pin male

ENHANCED VERSION	
E	Master/Slave Enhanced version
--	Standalone Enhanced version (*)

(*) only for models produced after 31/01/2020

TECHNICAL DATA

	SLS-SA3-08 SLS-SA5-08	SLS-M3-0812-E SLS-M5-0812-E		SLS-M3-1708-E SLS-M5-1708-E		SLS-M5-E-1708-E	SLS-R3-E SLS-R5-E
Connector used	**M12 8-pin**	**M12 8-pin**	**M12 12-pin**	**M12 17-pin**	**M12 17-pin + M12 8-pin**	**M12 17-pin + M12 8-pin high speed**	**N/A**
	GENERAL DATA						
Type (EN61496-1)	3						
PL (EN ISO 13849-1)	d						
SIL (IEC 61508)	2						
	DETECTION DATA						
Detection capability	30/40/50/70/150 mm selectable						
Angular resolution	0,1°						
Safety zone operating range	See Safety operating range table						
Warning zone max. operating range	40 m						
Max. number of symultaneous safety zones	1	1	2	3			Depending on connected Master
Max. number of symultaneous warning zones	2	1	2	2 (if safety zones < 3) 1 (if safety zones = 3)			Depending on connected Master
Max. opening angle	275°						
Tolerance zone	100 mm						
	ELECTRICAL DATA						
Power supply (Vdd)	24 Vdc ± 20%						
Output current	0.25 A max / each OSSD						N/A
Output Capacitive load	2.2 uF @ 24Vdc max						N/A
Input Load current	6 ... 15 mA						N/A
Input saturation voltage	> 15 V						N/A
Input Capacitive Load	22 uF						N/A
	MECHANICAL AND ENVIRONMENTAL DATA						
Operating temperature	-10 ...+50 °C						
Storage temperature	-20 ... 70°C						
Humidity	15 ... 95 % (no condensation)						
Mechanical protection	IP 65 (EN 60529)						
Housing material	Painted Aluminium, Polycarbonate						
Window material	PMMA						
	INPUTS/OUTPUTS CONFIGURATION DATA						
Connector	**M12 8-pin**	**M12 8-pin**	**M12 12-pin**	**M12 17-pin**	**M12 17-pin + M12 8-pin**	**M12 17-pin + M12 8-pin**	
Safety Outputs (OSSDs)	1 x 2	1 x 2	2 x 2	3 x 2	3 x 2	3 x 2	N/A
Configurable Inputs	0	2	1	4	12	8	N/A
Configurable Outputs	0	0	v	2	2	2	N/A
Configurable Inputs/Output	3	1	4	2	2	2	N/A
High speed inputs (100kHz)	N/A					4	N/A
Total configurable I/O	5	5	7	10	18	18	N/A
	CONFIGURABLE PARAMETERS						
Response time							
for main unit	Min: 62 ms; Max: 482 ms						
for any additional slave unit	10 ms						
Connector used	M12 8-pin	M12 8-pin	M12 12-pin	M12 17-pin	M12 17-pin + M12 8-pin	M12 17-pin + M12 8-pin high speed	
Max. Zone sets number in any activation order (*1):							
with 1 safety zone	3	3	10	20	70	70	N/A
with 1 safety zone + 1 warning zone	2	2	6	20	70	70	
with 1 safety zone + 2 warning zones	N/A	N/A	3	20	70	70	
with 2 safety zones	N/A	N/A	3	20	70	70	
with 2 safety zones + 1 warning zone	N/A	N/A	2	10	70	70	
with 2 safety zones + 2 warning zones	N/A	N/A	1	6	70	70	
with 3 safety zones	N/A	N/A	N/A	6	70	70	
Max. Zone sets number in a particular activation order with 1 safety zone (*2):	6	N/A					
Zone set input switching time	Min: 30 ms; Max: 5000 ms						
	FUNCTIONS						
Manual /automatic restart	Yes						N/A
Reset (power cycle)	Yes						
EDM (External Device Monitoring)	Yes						
Total Muting (monodirectional or bidirectional)	Yes						
Partial muting, dynamic for 1st OSSDs couple	Yes						
Reference Points	Yes						
Override	Yes (*3)	Yes					
Muting Lamp	Yes (*3)	Yes					
Muting Enable	Yes (*3)	Yes					
Clean Window Alarm	Yes						
Generic Fault Alarm	Yes						
Shut off	Yes						
Advanced measurement data	Yes (*4)	Yes (*5)					
Measurement data max. angolar resolution	0.1°						0.5°
	APPLICATIONS						
Horizontal static	Yes						
Vertical static	Yes						
Moving (simple AGVs)	Yes						
Moving (medium complexity AGVs)	No	Yes					

NOTES

(*1) The max number of zone sets switching is reached when all inputs are used for zone set switching. Using 8 inputs or encoder speed measurement the max. number of zone set of 70 can be reached.

(*2) With 1 safety zone only, up to 3 zone sets are available in any activation order. Up to 6 are available only using some allowed activation order. Refer to Manual and GUI for details.

(*3) Ovverride input, Muting Enable input and Muting Lamp output on SLS-SAx are mutually exclusive

(*4) Using the programming connector on the front of the device

(*5) Using the rotating connector in the back of the device

(*6) Only using 12-pin connector

(*7) To use more than 2 OSSDs, they have to be selected between configurable outputs

SAFETY OPERATING RANGE

	SLS-SA3-08 SLS-M3-xxxx-E SLS-R3-E	SLS-SA5-08 SLS-M5-xxxx-E SLS-M5-E-xxxx-E SLS-R5-E
Detection Capability	Safety Operating Range	
30 mm	0.05 ... 2.5 m	
40 mm	0.05 ... 3 m	0.05 ... 3 m
50 mm		0.05 ... 4 m
70 mm		0.05 ... 5.5 m
150 mm		

CONNECTIONS

CONNECTOR	CHARACTERISTICS	SLS-SAx	SLS-Mx-0812-E	SLS-Mx-(E-)-1708-E	SLS-Rx-E
A	M12 4-pins female	Ethernet port	Ethernet port	Ethernet port	N/A
B	M12 8-pins female	Not Present	Safe Connection to Slave device	Safe Connection to Slave device	Safe connection to next Slave device
D	M12 12 poles male	Not Present	Power and digital I/O in alternative to D	N/A	N/A
C	M12 8 poles male	Power supply and digital I/O	Power and digital I/O in alternative to C	N/A	N/A
E	M12 8-pins female	N/A	N/A	N/A	Safe connection to Master or previous Slave device
F	M12 17-pins male	N/A	N/A	Power and digital I/O alone or in combination with D	N/A
G	M12 8 poles male	N/A	N/A	Digital inputs in addition to F	N/A

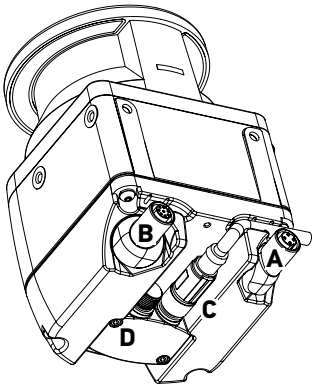

SLS-x (Master)

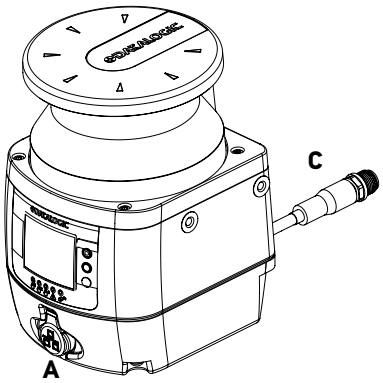

SLS-Sx (Standalone)

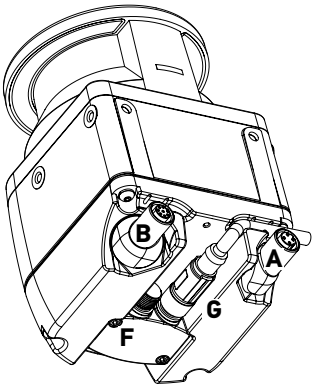

SLS-Mx-(E-)1708-E

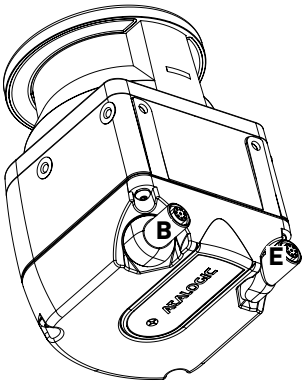

SLS-Rx-E

C CONNECTOR (M12, 8-Pins)				
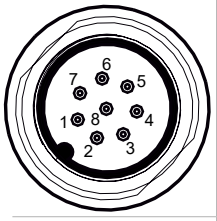	SIGNAL	DESCRIPTION	COLOR	PIN NUMBER
POWER	POWER SUPPLY	24Vdc	BROWN	2
	GND_ISO	0 V	BLUE	7
INPUT/OUTPUT	MULTI IN/OUT	Selectable by GUI	WHITE	1
	MULTI IN/OUT (*)	Selectable by GUI	GREEN	3
	MULTI IN/OUT (*)	Selectable by GUI	YELLOW	4
SAFETY OUTPUTS	OSSD11	Safety Output	GRAY	5
	OSSD12	Safety Output	PINK	6
OTHER	F_EARTH	Functional Earth	RED	8

NOTE

(*) Only MULTI IN and SLS-Mx

D CONNECTOR (M12, 12-Pins)

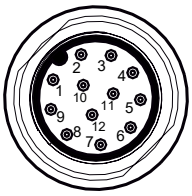

	SIGNAL	DESCRIPTION	COLOR	PIN NUMBER
POWER	POWER SUPPLY	24Vdc	BROWN	1
	POWER SUPPLY	24Vdc	GREEN	4
	GND_ISO	0 V	BLUE	2
	GND_ISO	0 V	YELLOW	6
INPUT	MULTI IN	Selectable by GUI	WHITE	3
INPUT/OUTPUT	MULTI IN/OUT	Selectable by GUI	BLACK	7
	MULTI IN/OUT	Selectable by GUI	RED	9
	MULTI IN/OUT	Selectable by GUI	VIOLET	10
	MULTI IN/OUT	Selectable by GUI	GREY/PINK	11
SAFETY OUTPUTS	OSSD11	Safety Output	GRAY	8
	OSSD12	Safety Output	PINK	5
OTHER	F_EARTH	Functional Earth	RED/BLUE	12

F CONNECTOR (M12, 17-Pins)

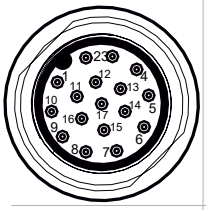

	SIGNAL	DESCRIPTION	COLOR	PIN NUMBER
POWER	POWER SUPPLY	24Vdc	BROWN	1
	POWER SUPPLY	24Vdc	BROWN	10
	POWER SUPPLY	24Vdc	BROWN	11
	GND_ISO	0 V	BLUE	2
	GND_ISO	0 V	BLUE	3
	GND_ISO	0 V	BLUE	12
INPUT	MULTI IN	Selectable by GUI	ORANGE	6
	MULTI IN	Selectable by GUI	BLACK	7
	MULTI IN	Selectable by GUI	WHITE	14
	MULTI IN	Selectable by GUI	VIOLET	17
OUTPUT	MULTI OUT	Selectable by GUI	GREEN	4
	MULTI OUT	Selectable by GUI	YELLOW	15
INPUT/OUTPUT	MULTI IN/OUT	Selectable by GUI	WHITE/BLACK	5
	MULTI IN/OUT	Selectable by GUI	RED	9
SAFETY OUTPUTS	OSSD11	Safety Output	GRAY	13
	OSSD12	Safety Output	PINK	8
OTHER	F_EARTH	Functional Earth	YELLOW/GREEN	16

G CONNECTOR (M12, 8-Pins)

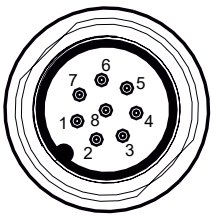

	SIGNAL	DESCRIPTION	COLOR	PIN NUMBER
HIGH SPEED INPUTS (*)	HIGH SPEED INPUT	Encoder input 11	GRAY	4
	HIGH SPEED INPUT	Encoder input 12	PINK	6
	HIGH SPEED INPUT	Encoder input 21	YELLOW	5
	HIGH SPEED INPUT	Encoder input 22	RED	8
INPUTS	MULTI IN	Selectable by GUI	GREEN	3
	MULTI IN	Selectable by GUI	BLUE	7
	MULTI IN	Selectable by GUI	BROWN	2
	MULTI IN	Selectable by GUI	WHITE	1

NOTE

(*) Only for SLS-M5-E-1708-E. Otherwise they are standard digital inputs selectable by GUI

SELECTABLE INPUTS AND OUPUTS								
IN /OUT	Signal	SLS-Sax	SLS-Mx-0812-E		SLS-Mx-1708-E		SLS-M5-E-1708-E	NOTES
		8-pin	8-pin	12 pin	17-pin	17 + 8 pin	17 + 8 pin	
MULTI IN	Reset	YES						
	Restart	YES						
	Reset/Restart	YES						
	EDM	YES						
	Area Switch 1	YES						
	Area Switch 2	YES						
	Area Switch 3	YES						
	Area Switch 4	N/A		YES				
	Area Switch 5	N/A		YES				
	Muting Enable 1	YES						
	Muting 11	YES						In order to activate muting, both muting inputs must be used
	Muting 12	YES						
	Override 11	YES						
	Override 12	YES						
	Muting Enable 2	N/A		YES				
	Muting 21	N/A		YES				In order to activate muting, both muting inputs must be used
	Muting 22	N/A		YES				
	Override 21	N/A		YES				
	Override 22	N/A		YES				
MULTI OUT	Warning 1	YES						
	Warning 2	YES	NO	YES				
	Muting lamp 1	YES						Can be used in combination with muting function
	Muting lamp 2	N/A		YES				
	Override status 1	YES						
	Override status 2	N/A		YES				
	Alarm 1	YES						Clean Window Alarm
	Alarm 2	YES						General Fault Alarm
OSSDs	OSSD 11	YES						
	OSSD 12	YES						
	OSSD 21	N/A		YES				
	OSSD 22	N/A		YES				
	OSSD 31	N/A			YES			
	OSSD 32	N/A			YES			

DIMENSIONS

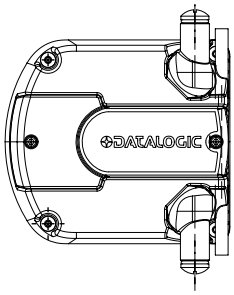

SLS-Mx

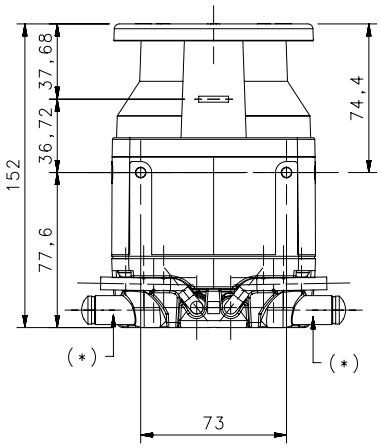

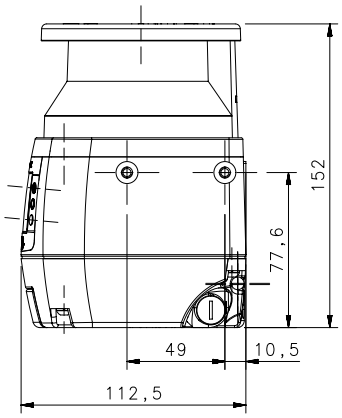

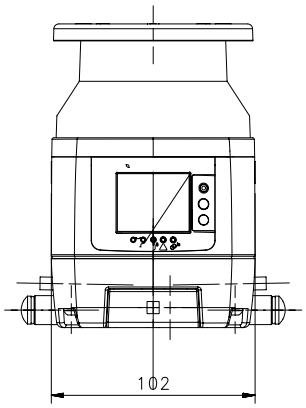

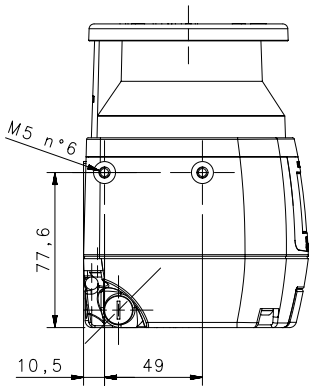

* rotating connectors can be positioned alternatively along x, y and z axis

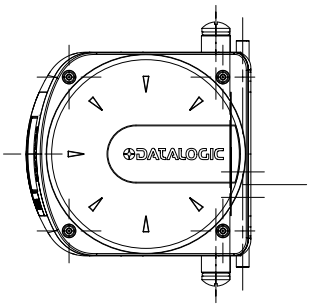

SLS-Mx WITH BRACKETS

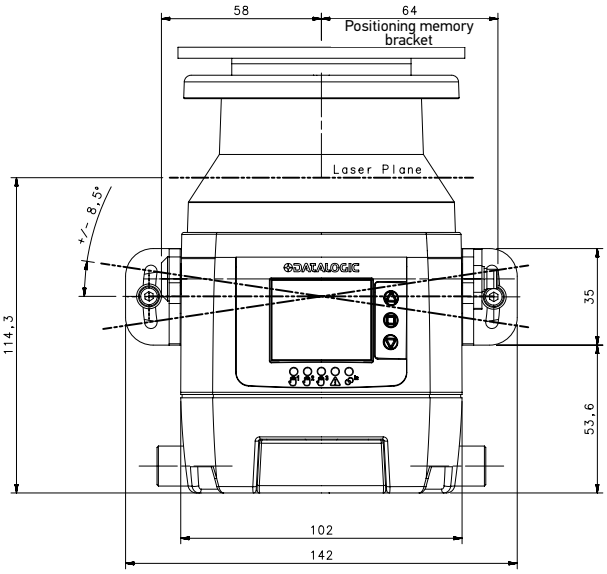

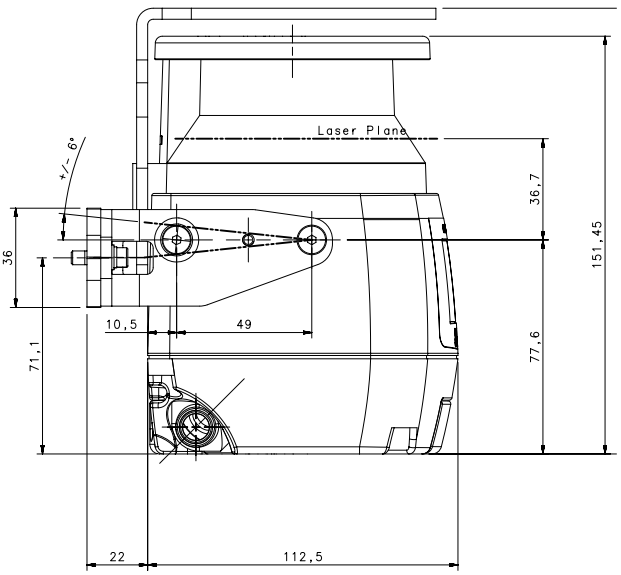

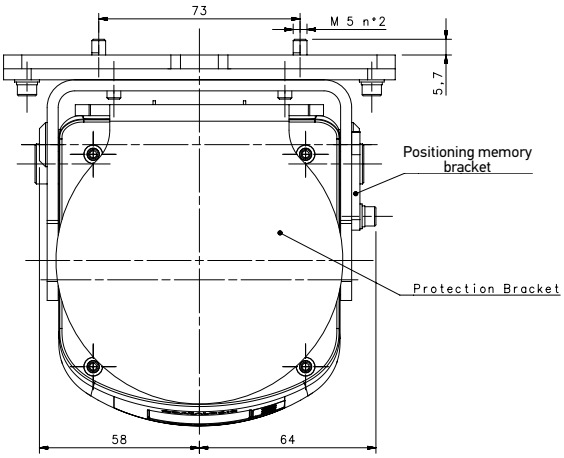

SLS-SAx

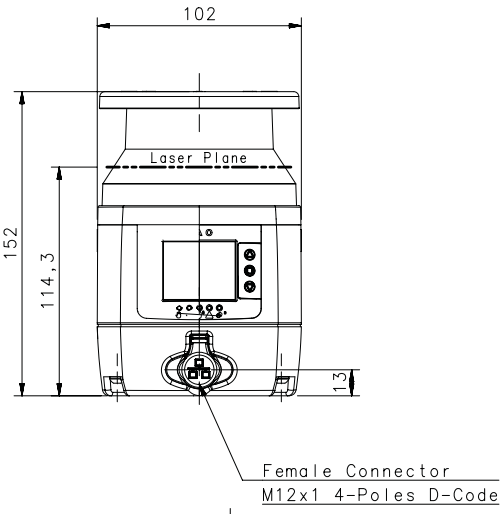

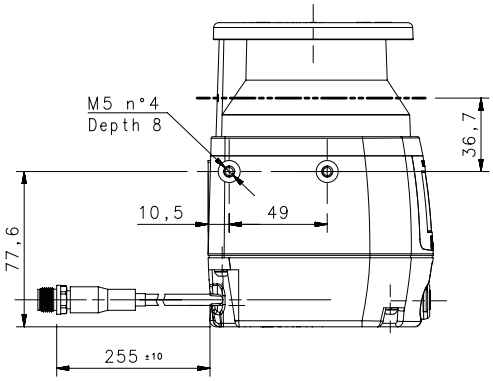

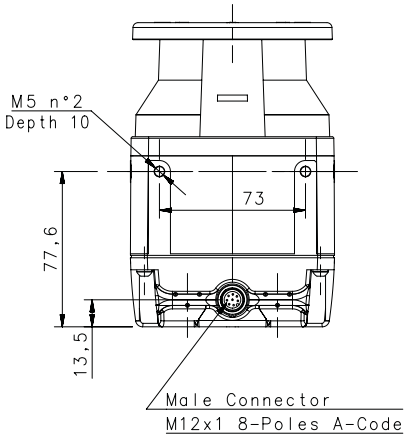

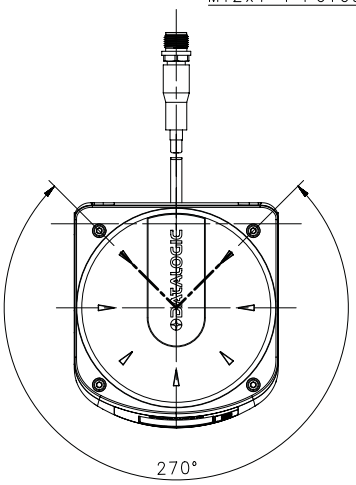

DIMENSIONS

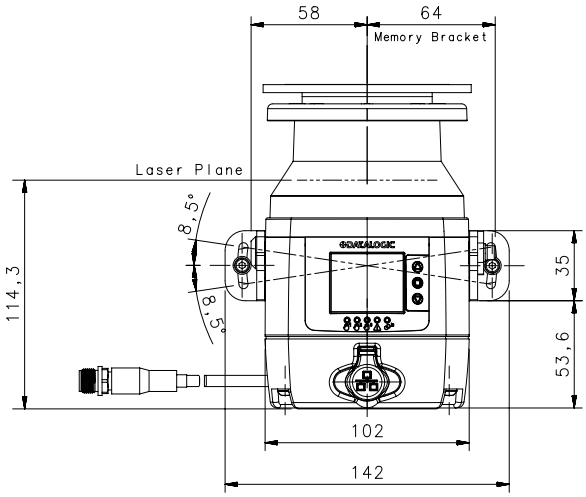

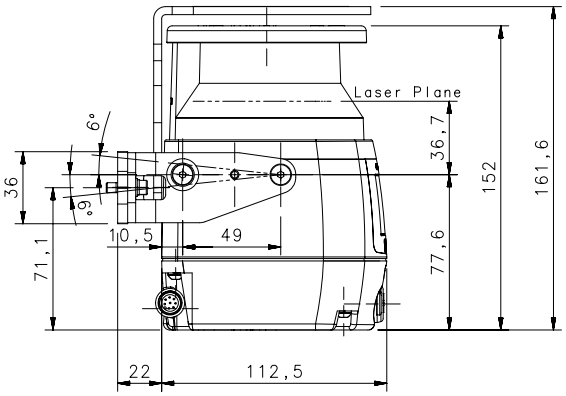

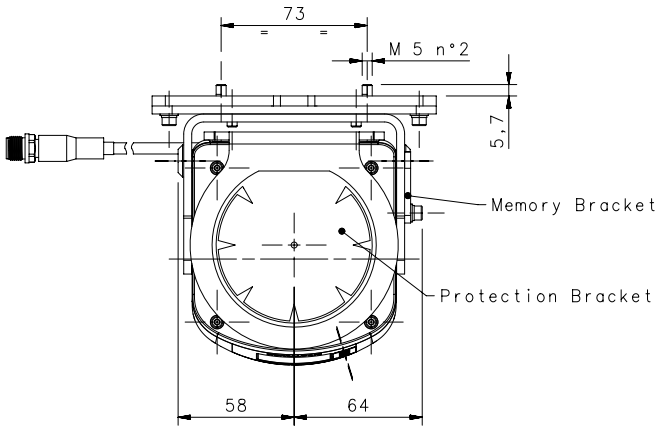

FIXING
N°2 Holes M5
Depth □6 mm
Drilling Distance 73 mm

SLS-Rx

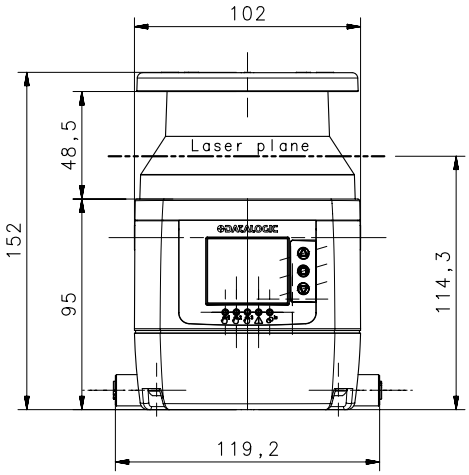

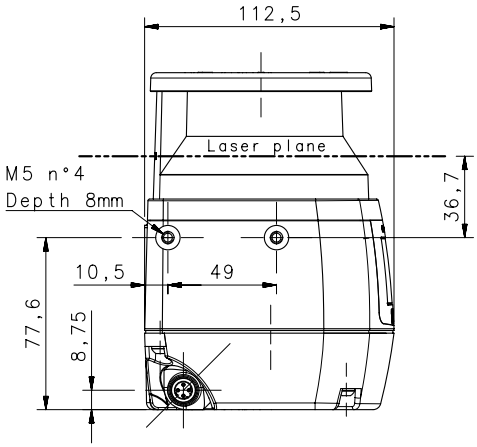

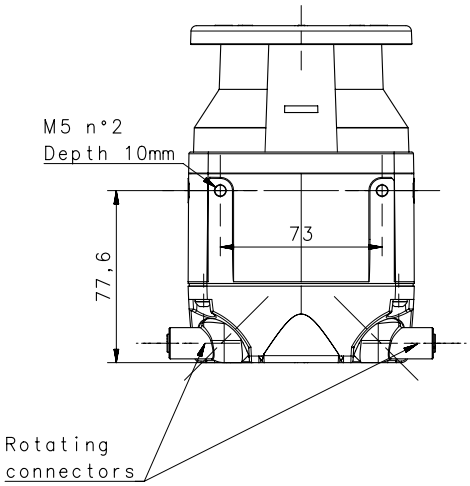

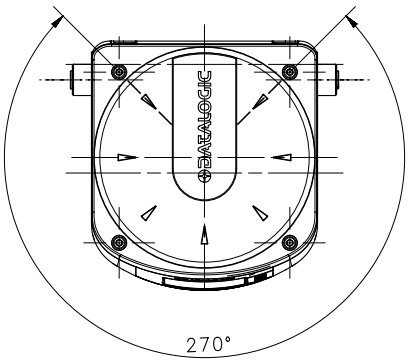

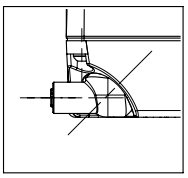

Rotating connectors 120°

MODEL SELECTION - ORDER INFORMATION

	MODEL	PRODUCT DESCRIPTION	ORDER NO.
STANDALONE	SLS-SA3-08	Standalone 3m 6 zone sets enhanced	958001080
	SLS-SA5-08	Standalone 5.5m 6 zone sets enhanced	958001090
MASTER	SLS-M3-0812-E	Master 3m 10 zone sets enhanced	958001020
	SLS-M5-0812-E	Master 5.5m 10 zone sets enhanced	958001110
	SLS-M3-1708-E	Master 3m 70 zone sets enhanced	958001010
	SLS-M5-1708-E	Master 5.5m 70 zone sets enhanced	958001030
	SLS-M5-E-1708-E	Master 5.5m encoder 70 zone sets enhanced	958001050
SLAVE	SLS-R3-E	Remote 3m enhanced	958001060
	SLS-R5-E	Remote 5.5m enhanced	958001120

NOTE: the standalone models have enhanced features if produced after 31.01.2020

ACCESSORIES

	SLS-B5 / SLS-SAx	ORDER NUMBER
	BRACKETS	
Complete bracket system	SLS-BRACKET-A	95ASE2920
Pitch regulation bracket system	SLS-BRACKET-B	95ASE2930
Head protective bracket	SLS-BRACKET-C	95ASE2940
	SAFETY UNITS	
Safety Unit	SE-SR2	95ACC6170
	MAINTENANCE ACCESSORIES	
Replacement window	SLS-WINDOW (*1)	95ASE2971
Memory group M12 8/12 pins	SLS-MG-0812 (*2)	95ASE2960
Memory group M12 17/8 pins	SLS-MG-1708 (*3)	95ASE2950
Liquid cleaner in spray bottle (1 lt)	SLS-CLEANER	95ASE2990
Cleaning cloth (22 cm x 22 cm), 100 pcs.	SLS-CLOTH	95ASE3000

Note

*1) The replacement of window is available only for SLS-Mx-xxxx-E, SLS-Rx-E (Enhanced models) and SLS-SAx produced after 31.1.2020

*2) Only for SLS-Mx-0812-E

*3) Only for SLS-Mx-1708-E and SLS-Mx-E-1708-E

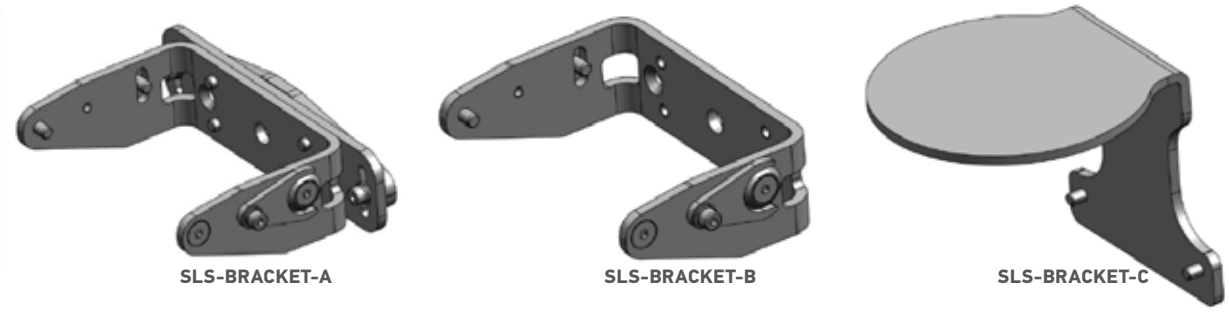

SLS-BRACKET-A SLS-BRACKET-B SLS-BRACKET-C

CABLES

	MODEL	1st end	2nd end	LENGHT	CODE
MAIN CABLES	CS-A1-06-U-03	8 pin female	free wires	3 m	95ASE1220
	CS-A1-06-U-05			5 m	95ASE1230
	CS-A1-06-U-10			10 m	95ASE1240
	CS-A1-06-U-15			15 m	95ASE1250
	CS-A1-06-U-25			25 m	95ASE1260
	CS-A1-10-U-03	12 pin female	free wires	3 m	95A252720
	CS-A1-10-U-05			5 m	95A252730
	CS-A1-10-U-10			10 m	95A252740
	CS-A1-10-U-15			15 m	95A252750
	CS-A1-10-U-25			25 m	95A252760
	CS-A1-15-U-03	17 pin female	free wires	3 m	95ASE3010
	CS-A1-15-U-05			5 m	95ASE3020
	CS-A1-15-U-10			10 m	95ASE3030
	CS-A1-15-U-15			15 m	95ASE3040
	CS-A1-15-U-25			25 m	95ASE3050
ETHERNET TO HOST CABLES	CAB-ETH-M01 M12-IP67 ETHERNET CAB. (1M)	4 pin male	RJ45	1 m	93A051346
	CAB-ETH-M03 M12-IP67 ETHERNET CAB. (3M)			3 m	93A051347
	CAB-ETH-M05 M12-IP67 ETHERNET CAB. (5M)			5 m	93A051348
	CAB-ETH-M10 M12-IP67 ETHERNET CAB. (10M)			10 m	93A051391
CABLES TO REMOTE	SLS-CABLE-R-5	8 pin male	8 pin male	5 m	95ASE2890
	SLS-CABLE-R-10			10 m	95ASE2900
	SLS-CABLE-R-20			20 m	95ASE2910

NOTES

ETHERNET TO HOST CABLES are used for programming and monitoring the device with DL Sentinel, and for reading the measurement data.
CABLES TO REMOTE are used to connect the Master models to the Slaves like in the following picture

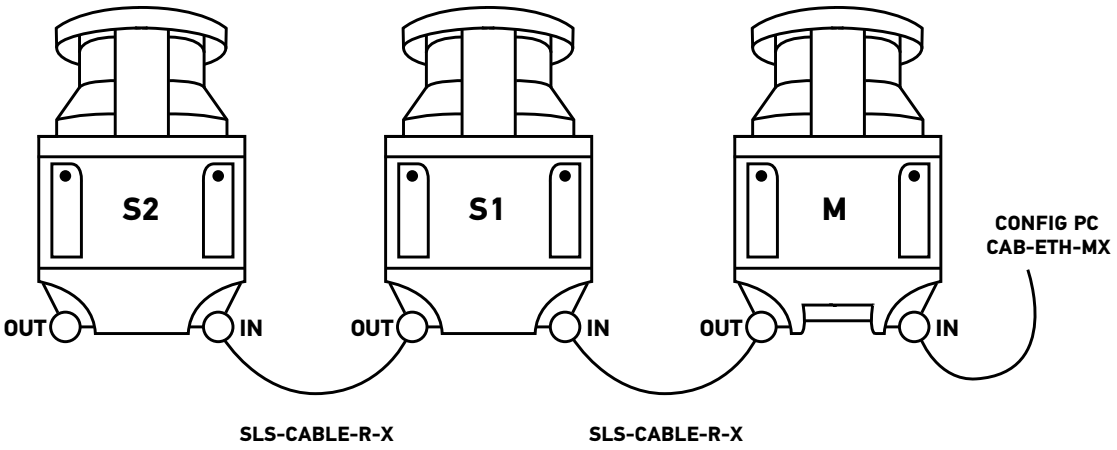

The colour graphical display of LASER SENTINEL shows if any person has been detected in the safety or warning areas, causing by consequnce the stopping of the machine or the warning signal to activate.
The presence of 11 angular sectors allow to show the direction in which the person has been detected, and its colour indicate if it has been inside the safety (red) or the warning zone (yellow).

DISPLAYED ICON	NAME	DESCRIPTION
GO	**ON state**	The device is correctly functioning (OSSDs GO Condition). No presence detected in the Safety and Warning Area. (Configuration accepted)
WARNING	**OFF State for intrusion in Safety Area**	The device is correctly functioning. The device has detected a presence in the Warning Area (Configuration accepted)
STOP	**Warning for intrusion in Warning Area**	The device is correctly functioning (OSSDs STOP Condition). The device has detected a presence in the Safety Zone. (Configuration accepted)
REFERENCE	**OFF State for Reference Points**	The device has detected that Reference Points have moved. The Display Sector in the direction of the moved reference point is lit in blue.

LED NUMBER	SYMBOL	DEFINITION	COLOR	MEANING	OUTPUT STATUS
1		Object Detection in Safety Zone 1 (OSSD 11/12).	GREEN	No object detected	OSSDs OFF
			RED	Object detected	OSSDs ON
2		Object Detection in Safety Zone 2 (OSSD 21/22).	GREEN	No object detected	OSSDs OFF
			RED	Object detected	OSSDs ON
3		Object Detection in Safety Zone 3 or Warning Zone 2	AMBER	Object detected	OSSDs OFF Warning 2 ON/OFF if set up
			OFF	No object detected	OSSDs ON Warning 2 output varies depending on warning function configuration
4		Object Detection in Warning Zone 1	AMBER	Object detected in Warning Zone 1	Warning 1 output varies depending on warning function configuration
			OFF	No object detected in Warning Zone 1	Warning 1 output varies depending on warning function configuration
5		Interlock	AMBER	No Object detected in Safety Zone Device waiting for Manual Restart (LED1 RED)	OSSDs OFF
			OFF	No Object detected in Safety Zone Device in ON Status (LED 1 GREEN)	OSSDs ON
				Object detected in Safety Zone Device in OFF Status (LED 1 RED)	OSSDs OFF

Rev. 07, 05/2020

DATALOGIC PRODUCT OFFERING

Sensors

Hand Held scanners

Mobile Computers

Laser Marking Systems

Vision Systems

Stationary Industrial Scanners

Safety Light Curtains

RFID Systems

The company endeavours to continuously improve and renew its products; for this reason the technical data and contents of this catalogue may undergo variations without prior notice. For correct installation and use, the company can guarantee only the data indicated in the instruction manual supplied with the products.

ACCESSORIES

DATALOGIC
EMPOWER YOUR VISION

BRACKETS

Metal angled brackets

MODEL	DESCRIPTION	ORDER NUMBER
ST-KSTD	Fixing brackets (4 pcs kit)	95ACC1670
	COMPATIBILITY	
	SG2 BASE, SG4 BASE SG2 EXTENDED, SG4 EXTENDED SG2/4 COMPACT BODY SG2 MUTING SG2/4 BODY BIG, SG4 BODY REFLECTOR, SG4 LONG RANGE BASE.	
NOTES		

They can be used in combination with orientable (ST-K40R/K60R) or antivibration (ST-K4AV/K6AV) supports.

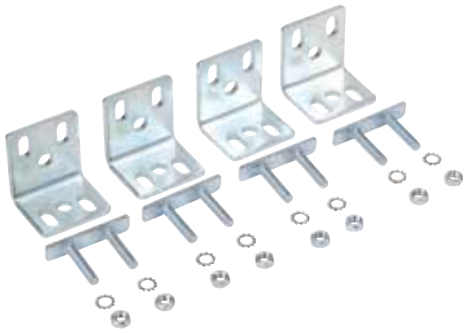

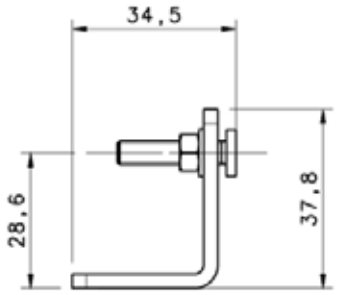

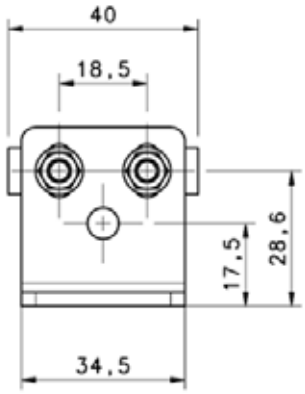

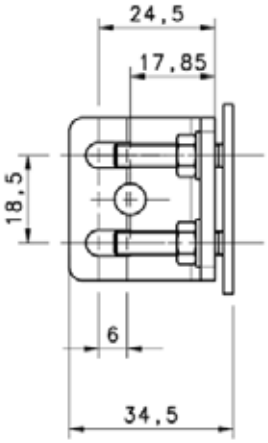

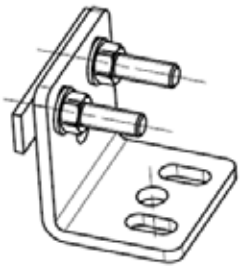

MODEL	DESCRIPTION	ORDER NUMBER
ST-K4STD-SG BODY BIG	Fixing brackets (4 pcs kit) for SG BODY BIG	95ASE1950
	COMPATIBILITY	
	SG BODY BIG	

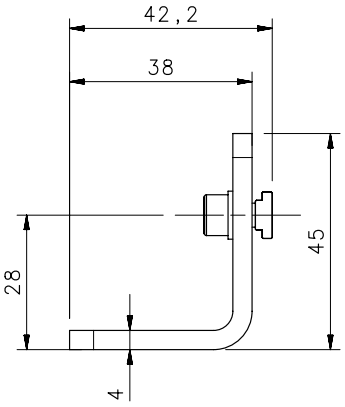

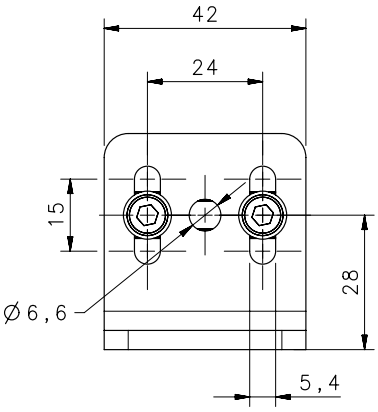

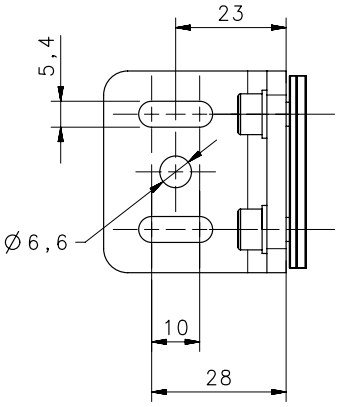

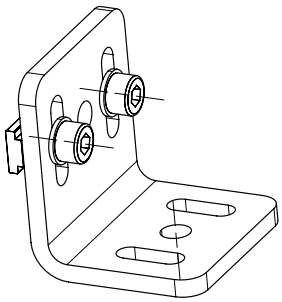

DATALOGIC

MODEL	DESCRIPTION	ORDER NUMBER
ST-K4OR	Orientable supports (4 pcs kit)	95ACC1680
ST-K6OR	Orientable supports (6 pcs kit)	95ACC1690
	COMPATIBILITY	
	SG2 BASE, SG4 BASE SG2 EXTENDED, SG4 EXTENDED SG2/4 COMPACT BODY SG2 MUTING SG2/4 BODY BIG, SG4 BODY REFLECTOR, SG4 LONG RANGE BASE.	

NOTES

They can be used together with metal angled fixing brackets (ST-KSTD) or plastic angled mounting brackets (ST-KP4MP/KP6MP), also in combination with antivibration supports (ST-K4AV/K6AV)

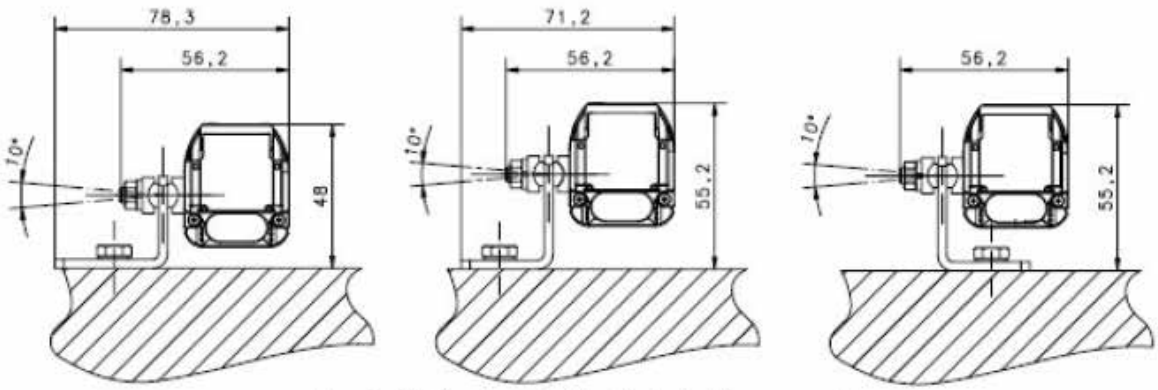

Angled mounting bracket

NOTE: the dimensions are related to SG4 EXTENDED. For other models of light curtains, refer to their manual.

MODEL	DESCRIPTION	ORDER NUMBER
ST-K4AV	Anti-vibration supports (4 pcs kit)	95ACC1700
ST-K6AV	Anti-vibration supports (6 pcs kit)	95ACC1710
	COMPATIBILITY	
	SG2 BASE, SG4 BASE SG2 EXTENDED, SG4 EXTENDED SG2/4 COMPACT BODY SG2 MUTING SG2/4 BODY BIG, SG4 BODY REFLECTOR, SG4 LONG RANGE BASE.	

NOTES

Anti-vibration supports to be used together with metal angled mounting brackets (ST-KSTD, ST-K4STD-SG BODY BIG) or plastic angled mounting brackets (ST-KP4MP/KP6MP), also in combination with orientable supports (ST-K4OR/K6OR).

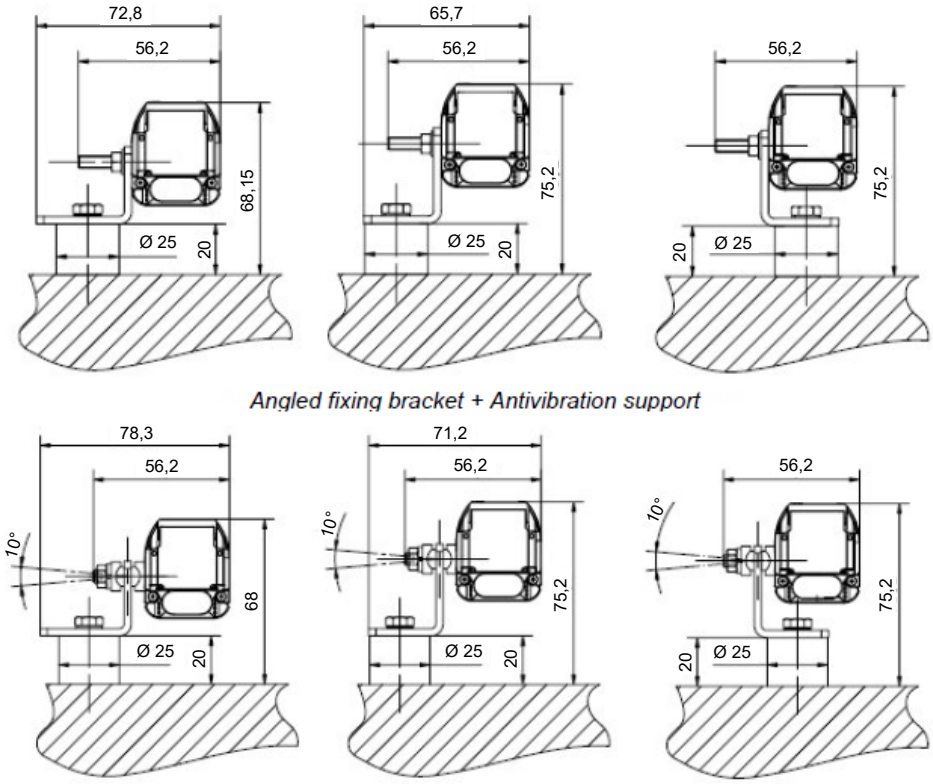

Angled mounting bracket + Orientable support + Anti-vibration support

NOTE: the dimensions (mm) are related to SG4 EXTENDED. For other models of light curtains, refer to their manual.

Plastic angled brackets

MODEL	DESCRIPTION	ORDER NUMBER
ST-KP4MP	Fixing brackets (4 pcs kit)	95ASE1100
ST-KP6MP	Fixing brackets (6 pcs kit)	95ASE1110
	COMPATIBILITY	
	SG2 BASE, SG4 BASE SG2 EXTENDED, SG4 EXTENDED SG2/4 BODY COMPACT SG2 MUTING SG2/4 BODY BIG SG4 BODY REFLECTOR SG4 LONG RANGE BASE.	

NOTES

They can be used in combination with orientable (ST-K4OR/K6OR) or antivibration (ST-K4AV/K6AV) supports.

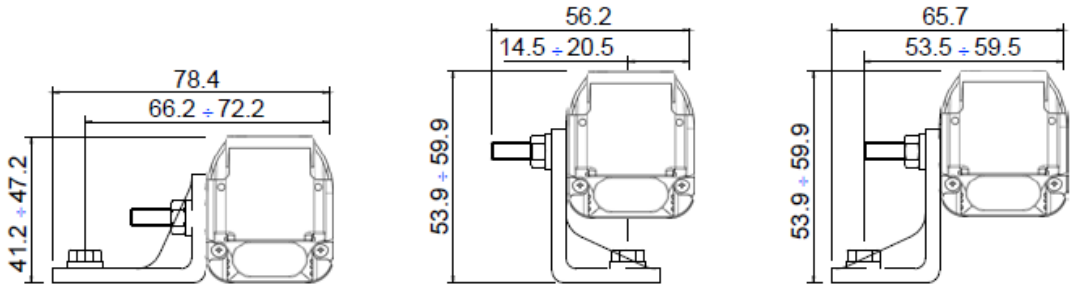

NOTE: the dimensions (mm) are related to SG4 EXTENDED. For other models of light curtains, refer to their manual.

Cascade brackets

MODEL	DESCRIPTION	ORDER NUMBER
ST-KCASCADE-SG EXTENDED	Connection Bracket for SG4 EXTENDED Cascade	95ASE2110
	COMPATIBILITY	
	SG4 EXTENDED	

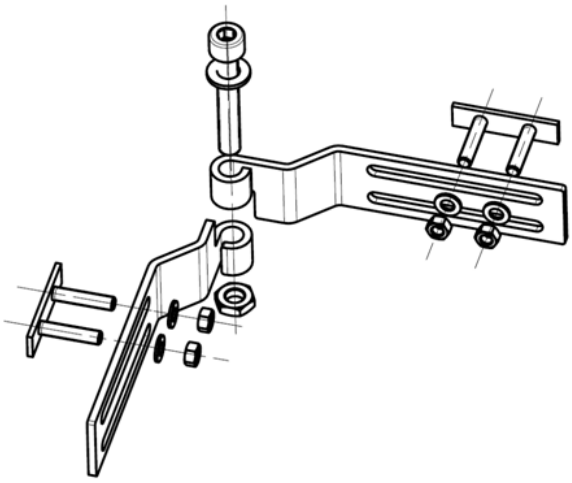

Rear brackets

MODEL	DESCRIPTION	ORDER NUMBER
ST-K4REAR-SG BODY BIG	Metal rear bracket mounting kit (4 brackets)	95ASE1970
	COMPATIBILITY	
	SG BODY BIG SG BODY REFLECTOR SG4 LONG RANGE BASE.	

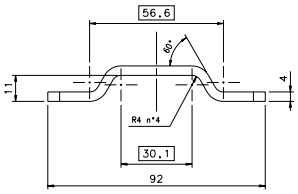

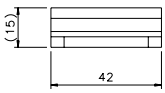

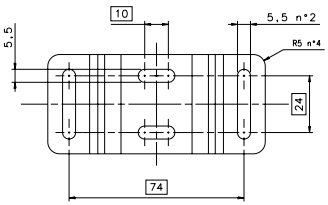

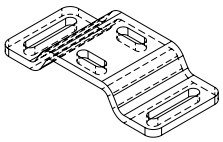

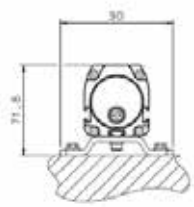

Rotative brackets

MODEL	DESCRIPTION	ORDER NUMBER
ST-K4ROT-SG BODY BIG	Metal top-bottom rotative fixing bracket mounting kit (4 brackets)	95ASE1960

COMPATIBILITY

SG BODY BIG
SG BODY REFLECTOR
SG4 LONG RANGE BASE.

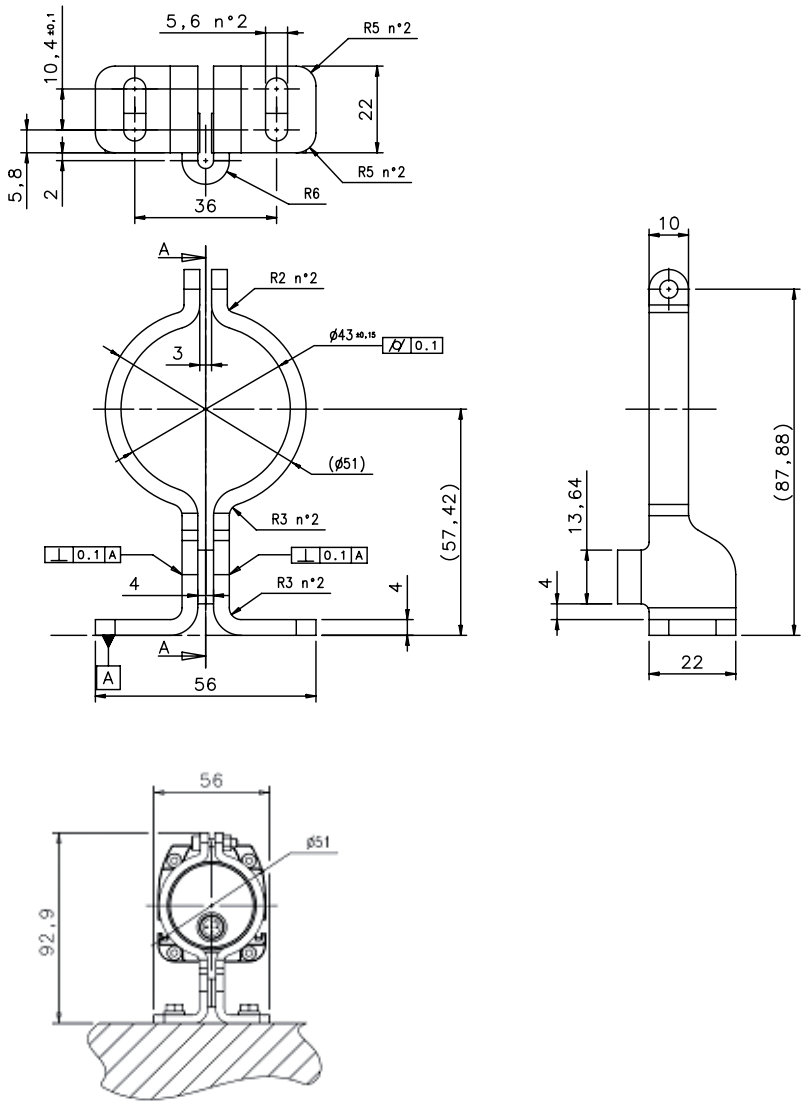

MODEL	DESCRIPTION	ORDER NUMBER
ST-K4ROT-SG BODY COMPACT	Metal top-bottom rotative bracket mounting kit (4 brackets)	95ASE2040
COMPATIBILITY		
SG BODY COMPACT		

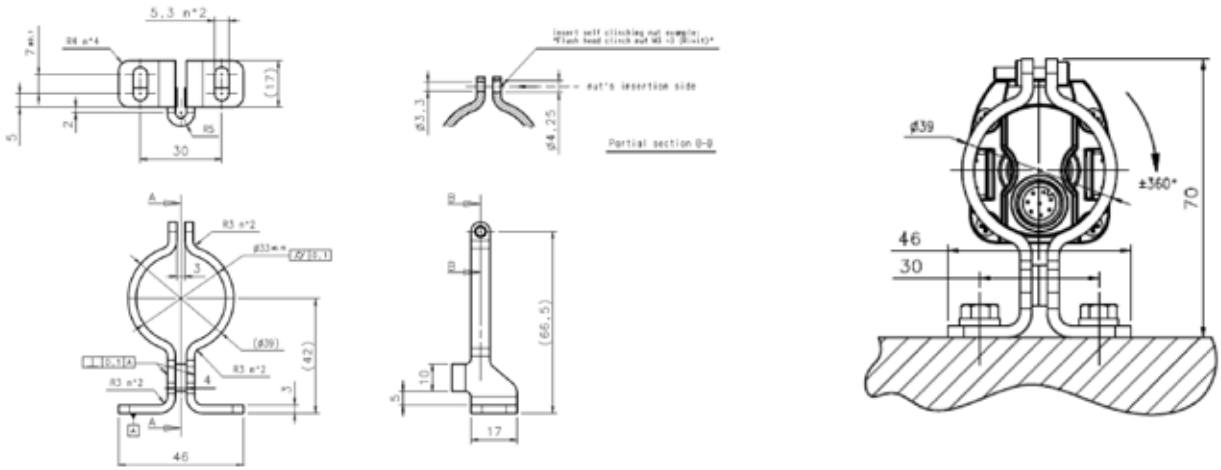

MODEL	DESCRIPTION	ORDER NUMBER
ST-K4ROT	Metal top-bottom rotating brackets kit (4 brackets)	95ASE1280
COMPATIBILITY		
SG2 BASE SG4 BASE SG2 EXTENDED		

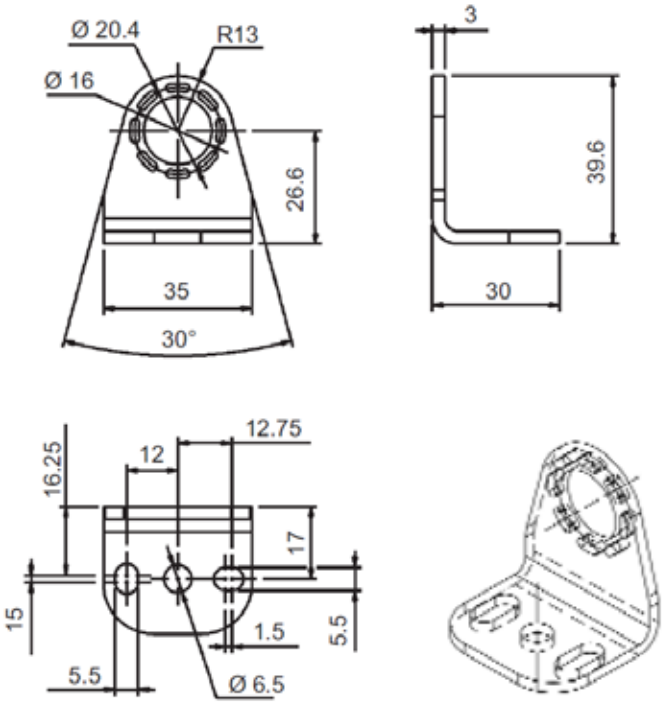

Rev. 07, 05/2020

MODEL	DESCRIPTION	ORDER NUMBER
ST-K4ROT-OP	Metal top-bottom rotating fixing brackes kit (4 brackets) for SG4 FIELDBUS	95ASE2840
COMPATIBILITY		
SG4 FIELDBUS		

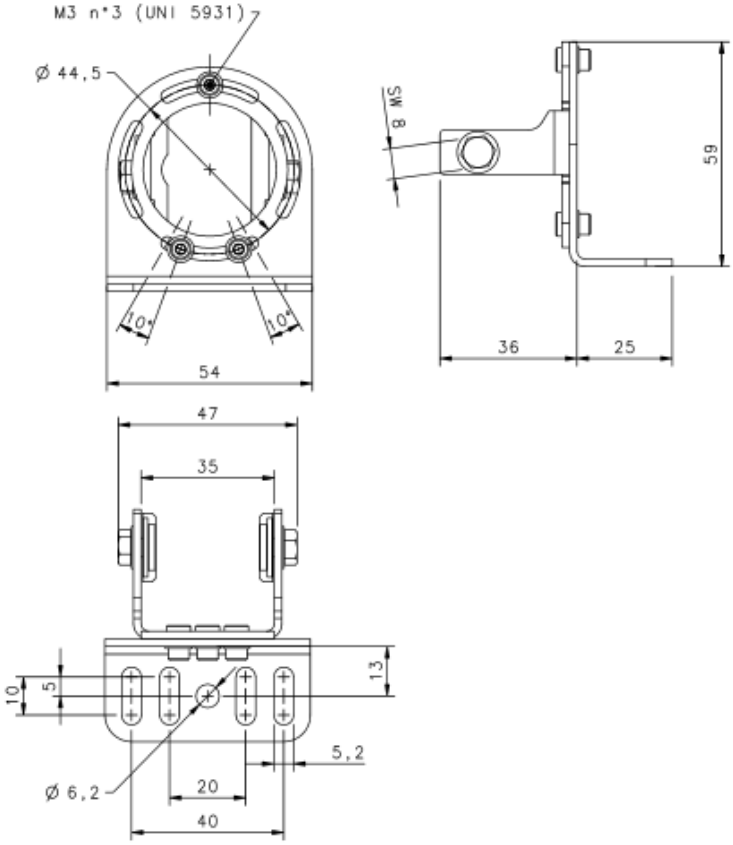

Safety Laser Scanner brackets

MODEL	DESCRIPTION	ORDER NUMBER
SLS-BRACKET-A	Complete bracket system	95ASE2920
SLS-BRACKET-B	Pitch regulation bracket system	95ASE2930
SLS-BRACKET-C	Head protective bracket	95ASE2940
COMPATIBILITY		
LASER SENTINEL		

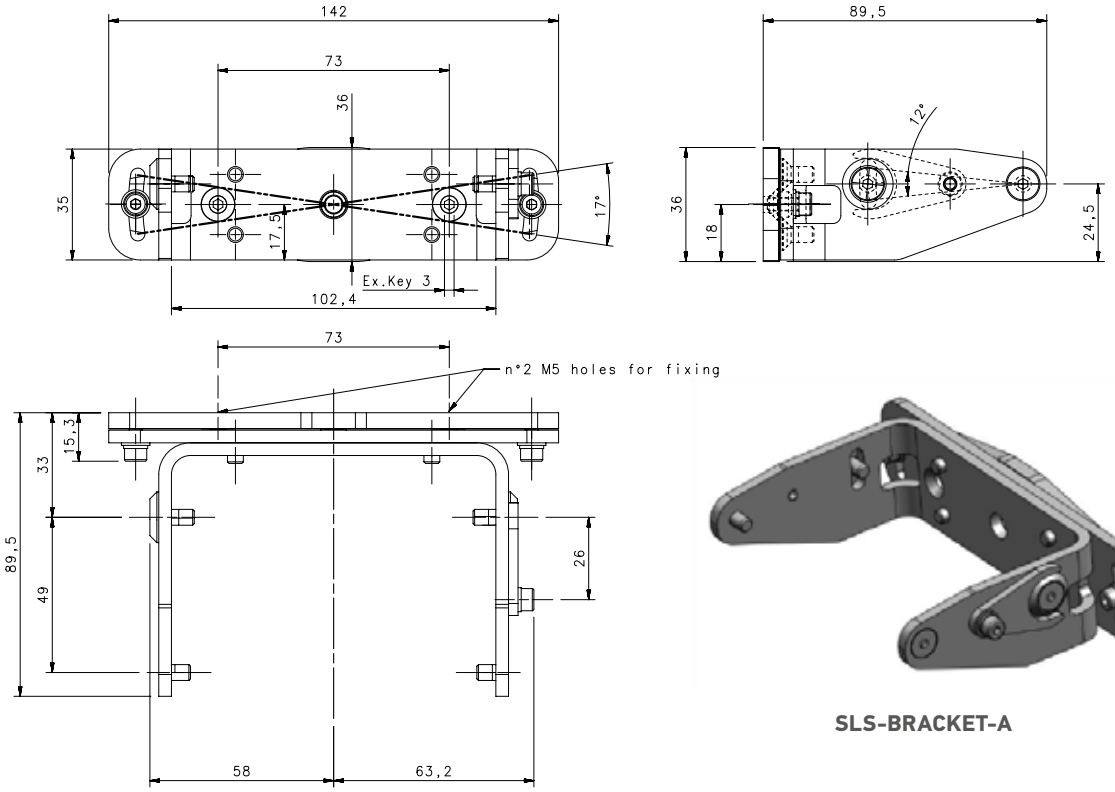

SLS-BRACKET-A

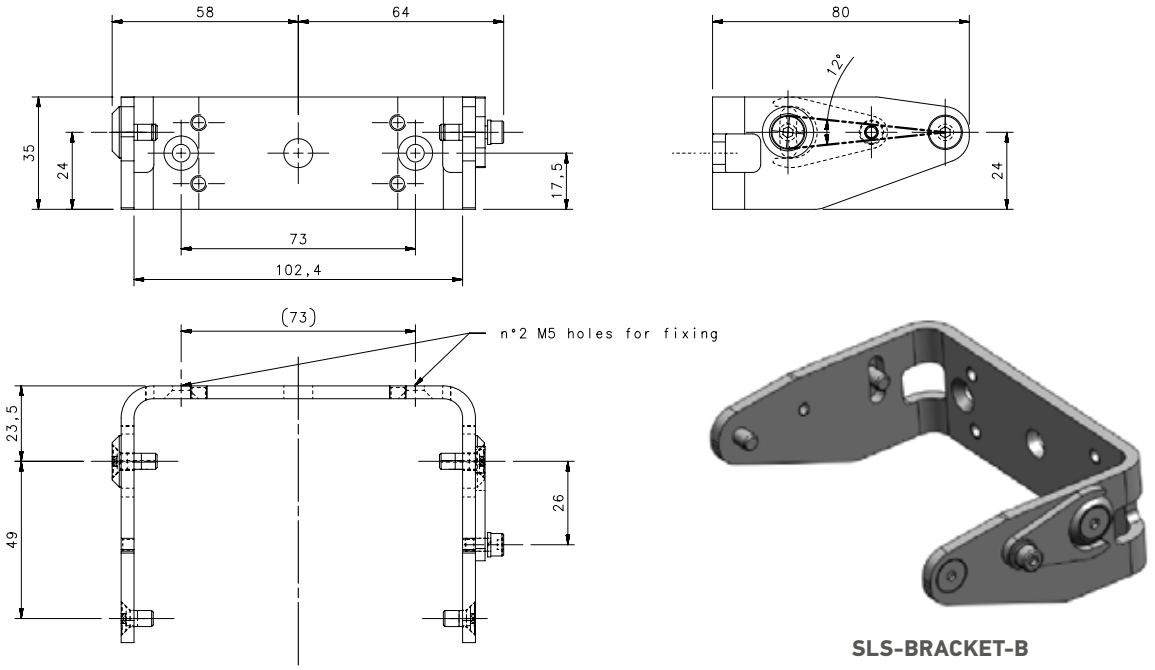

SLS-BRACKET-B

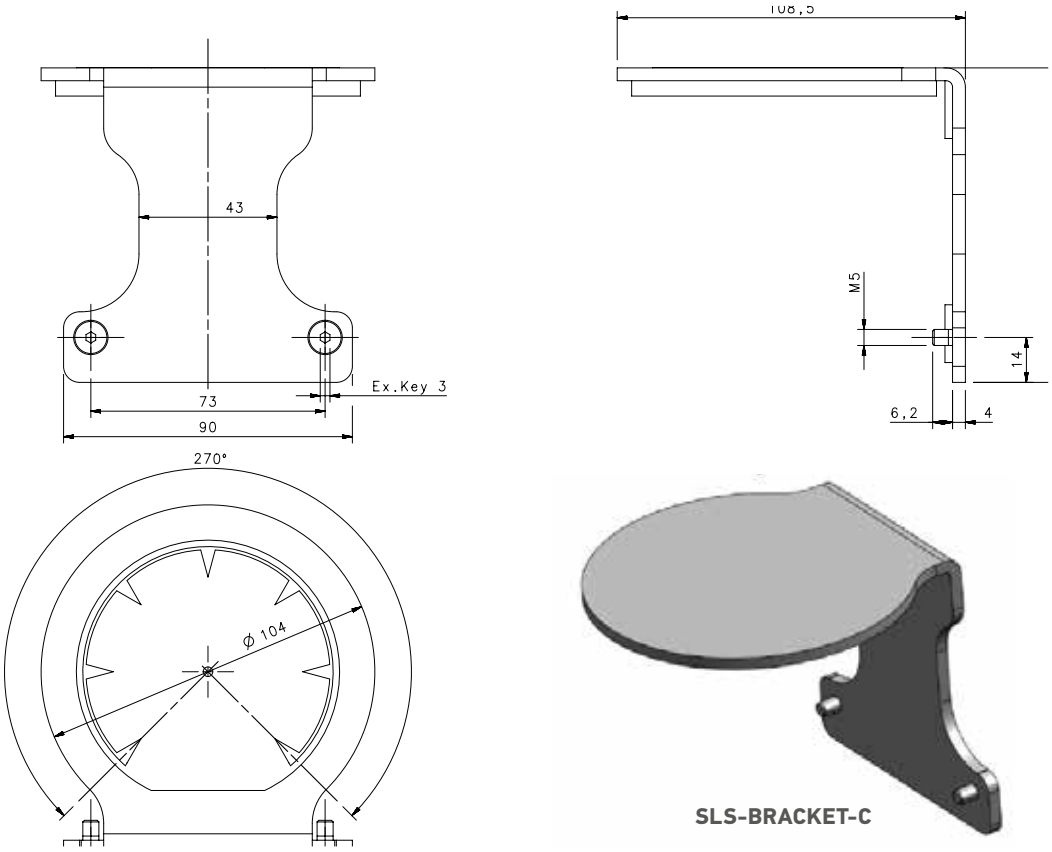

SLS-BRACKET-C

MIRRORS AND STANDS

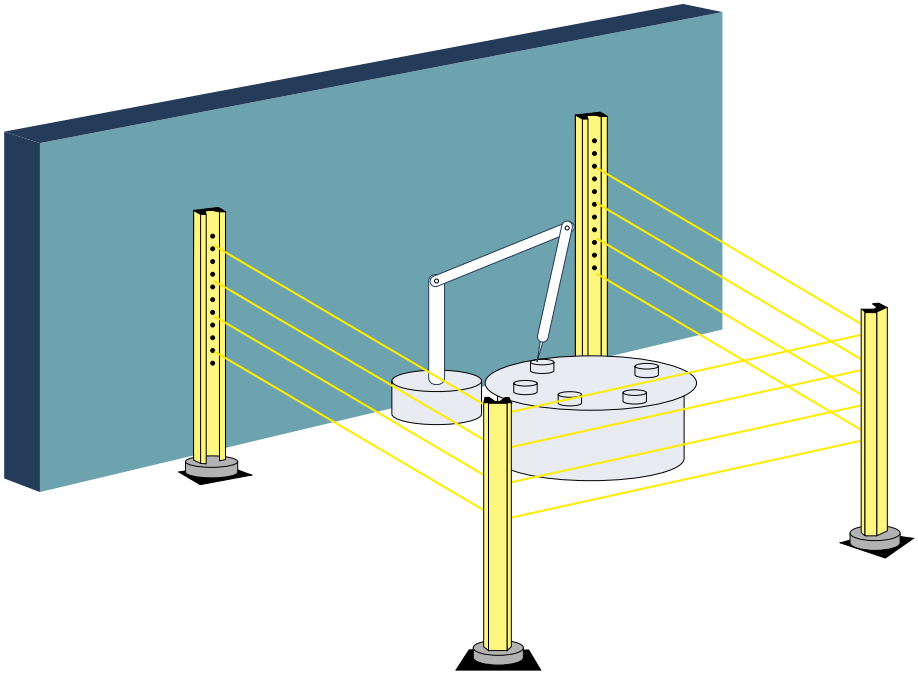

In applications where the monitoring of an area is required, safety light curtains can be used together with mirror for perimetral protection.

DATALOGIC offers a series of stands with adjustable mirrors already in place for 2 , 3 , 4 beam safety light curtains (SG-PSM), or the option to build a configuration, applying SG-DM mirrors to SE-S or SG-PSB stands.

GUIDELINE FOR THE USE OF MIRRORS WITH SAFETY LIGHT CURTAINS

The alignment of safety light curtains can sometimes be critical because of the long distance that beams have to cover or because of environmental conditions like for example the presence of dust or the irregularity of the floor on which the stands are placed.

The reason behind this difficulty is that the beams of a safety light curtain can span in an angle that must be, for safety reasons, limited to values defined by technical standards, harmonized with Machine Directive (i.e. at 3 meters, the angle is 2.5° for a Type 4 safety light curtain).

If mirrors are used to deflect the beams beetween emitter and receiver, the intensity of the beams is reduced, and by consequence also the maximum reachable distance. Moreover, for inevitable tolerances in opto-mechanical assembly, it's not possible to guarantee that all light curtains beams are parallel to each other, and the use of mirrors always amplifies those unevennesses.

By consequence, the higher is the number of the beams, the bigger is the risk to lose alignment of one of them and, even if alignment is reached, to have an unstable alignment: if the light curtain or a mirror is hit, the alignment can be lost.
Finger and hand protection safety light curtains have so many beams that in case of several mirrors reflections, the risk of losing alignment is extremely high.

For all these reasons, since for finger or hand protection safety light curtains it is impossible to guarantee a stable alignment with more than one mirror, we exclude in these cases the use of more than one mirror.

The use of more than one mirror is possible only for body protection safety light curtains (that is, with 2, 3 or 4 beams), and when the mirrors used are belonging to DATALOGIC SG-PSM series, that allow the orientation of each single mirror independently.

The correct operating distance calculation (i.e. the maximum trajectory length of the beams between emitter and receiver, passing by the mirrors, in condition of perfect alignment and without presence of dust and fog), must consider a reflection factor of 80%, like in the following table:

Mirrors	RANGE BETWEEN TRANSMITTER AND RECEIVER					
	FINGER HAND/RESOLUTION (SG-DM mirrors used)			BODY RESOLUTION (SG-PSM mirrors used)		
0	6,0	7,0	19,0	20,0	50,0	60,0
1	4,8	5,6	15,2	16,0	40,0	48,0
2	N/A	N/A	N/A	N/A	32,0	38,4
3	N/A	N/A	N/A	N/A	25,6	30,7

Stands with adjustable mirrors (SG-PSM)

Stands with adjustable pre-mounted mirros, to protect them from accidental collisions.
An industrial steel base made with 2 plates, dowels and spheric level for adjustment of the vertical axis, slots for angular adjustment. The effect of collisions, vibrations and uneven floor surfaces can be compensated by using SG-P plate kit (to be ordered separately).

MODEL	DESCRIPTION	ORDER NUMBER
SG-PSM-2-500	Protective stand with 2 mirrors H=500 mm	95ASE2300
SG-PSM-3-800	Protective stand with 3 mirrors H=800 mm	95ASE2310
SG-PSM-4-900	Protective stand with 4 mirrors H=900 mm	95ASE2320
SG-PSM-4-1200	Protective stand with 4 mirrors H=1200 mm	95ASE2330

SG-PSM-2-500

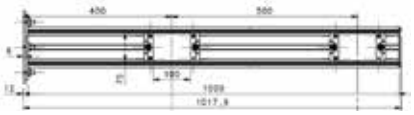

SG-PSM-3-800

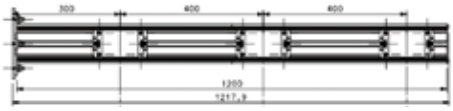

SG-PSM-4-900

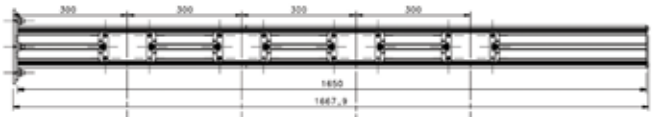

SG-PSM-4-1200

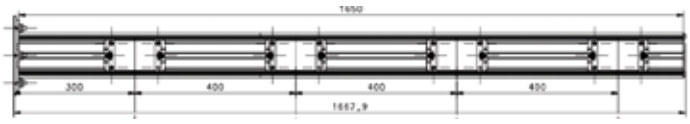

PLATE KIT SG-P

MODEL	DESCRIPTION	ORDER NUMBER
SG-P	Plate kit for protective stands	95ASE2290
COMPATIBILITY		
protection stands SG-PSB mirror stands SG-PSM		

The kit includes two plates and three springs, to compensate the effect of collisions, vibrations and uneven floor surfaces.

The plate kit can be used with protection stands SG-PSB and with mirror stands SG-PSM

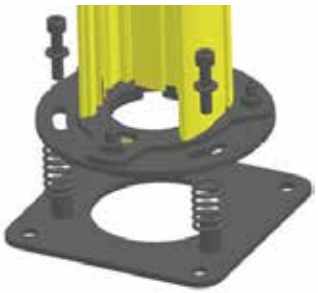

Mirrors

MIRRORS FOR FINGER AND HAND PROTECTION SAFETY LIGHT CURTAINS (SG-DM)

MODEL	DESCRIPTION	ORDER NUMBER
SG-DM 600	Deviating mirror version 600 mm	95ASE1680
SG-DM 900	Deviating mirror version 900 mm	95ASE1690
SG-DM 1200	Deviating mirror version 1200 mm	95ASE1700
SG-DM 1650	Deviating mirror version 1650 mm	95ASE1710
SG-DM 1900	Deviating mirror version 1900 mm	95ASE1720

NOTES

1. To mount these mirrors into the stands SG-PSB, order ST-PS-DM mounting kit
2. To mount these mirrors to columns SE-S, order one ST-DM mounting kit
3. The mirror length has to be at least 100 mm greater than the length of the light curtain's protected area.
   Ex. For a SG2-30-090-00-E (protection height = 900 mm), choose a SG-DM 1200

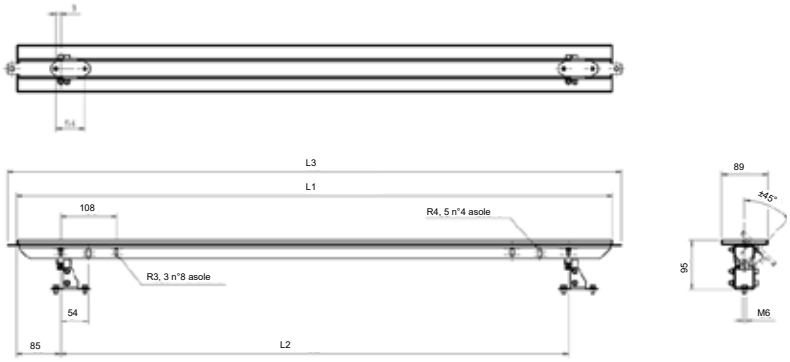

The image includes the mirror SG-DM and the bracket mounting kits ST-DM that includes two brackets.

	L1 (mm)	L2 (mm)	L3 (mm)
SG -DM 600	545	376	580
SG -DM 900	845	676	880
SG -DM 1200	1145	976	1180
SG -DM 1650	1595	1426	1630
SG -DM 1900	1845	1676	1880

SINGLE BEAM MIRROR

MODEL	DESCRIPTION	ORDER NUMBER
SG-DM 150	Deviating mirror version 150 mm	95ASE1670

NOTES

1. To mount this mirror into the stands SG-PSB order ST-PS-DM mounting kit
2. To mount this mirrors to columns SE-S, order ST-DM mounting kit

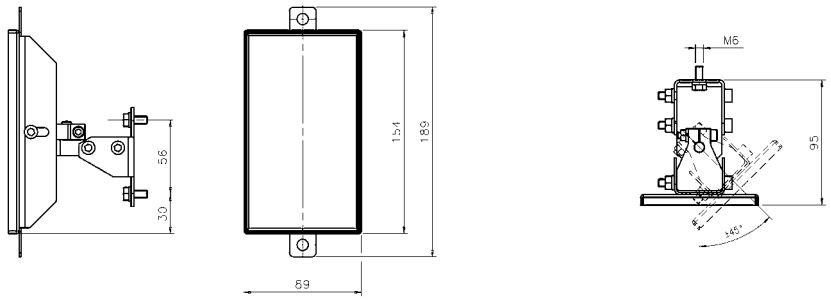

Stands

PROTECTIVE STANDS (SG-PSB) AND ACCESSORIES

MODEL	DESCRIPTION	ORDER NUMBER
SG-PSB 600	Protective Stand H=600 mm	95ASE2240
SG-PSB 1000	Protective Stand H=1000 mm	95ASE2250
SG-PSB 1200	Protective Stand H=1200 mm	95ASE2260
SG-PSB 1650	Protective Stand H=1650 mm	95ASE2270
SG-PSB 1900	Protective Stand H=1900 mm	95ASE2280
COMPATIBILITY		
All SG Series Light Curtains SG-DM Mirrors		

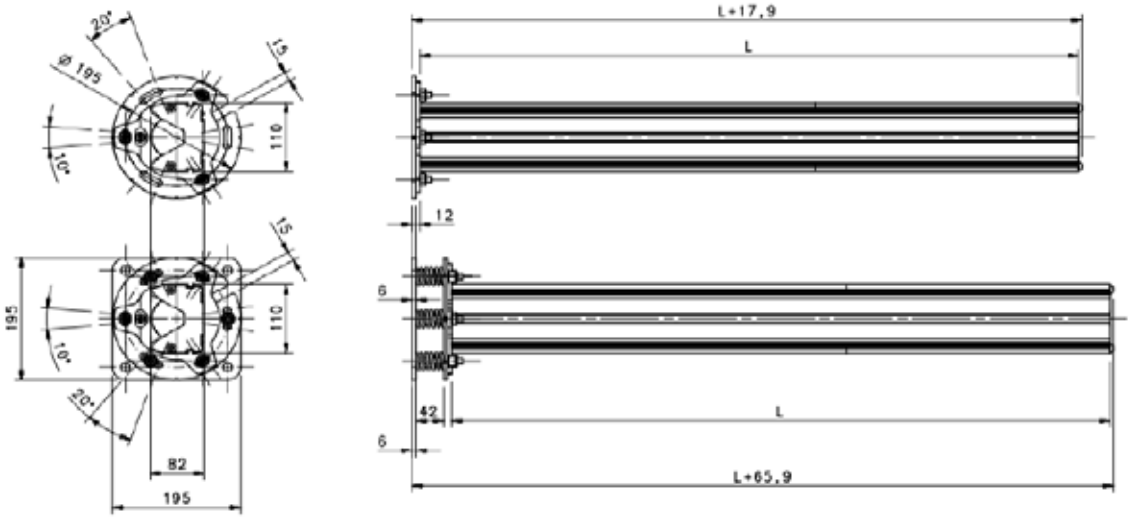

FLOOR COLUMNS (SE-S) AND ACCESSORIES

MODEL	DESCRIPTION	ORDER NUMBER
SE-S 800	Column and floor stand H = 800 mm	95ACC1730
SE-S 1000	Column and floor stand H = 1000 mm	95ACC1740
SE-S 1200	Column and floor stand H = 1200 mm	95ACC1750
SE-S 1500	Column and floor stand H = 1500 mm	95ACC1760
SE-S 1800	Column and floor stand H = 1800 mm	95ACC1770
COMPATIBILITY		
All SG Series Light Curtains SG-DM Mirrors		

Stands SE-S

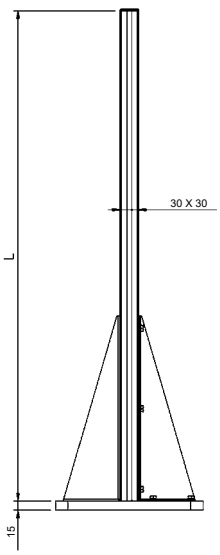

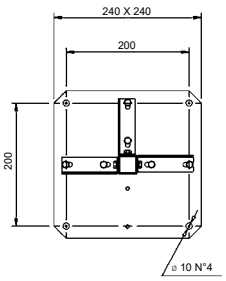

Stands SG-PSB

Mounting kits for mirrors

MOUNTING KIT FOR SG-DM MIRRORS ON SE-S FLOOR COLUMNS

MODEL	DESCRIPTION	ORDER NUMBER
ST-DM	Deviating mirror SG-DM mounting kit	95ASE1940
	COMPATIBILITY	
	SG-DM Mirrors on SE-S floor columns	
NOTE		
For each mirror (SG-DMxxx) order 1 kit.		

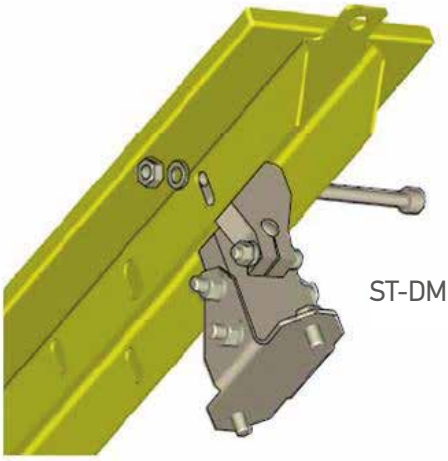

MOUNTING KIT FOR SG-DM MIRRORS AND SG-PSB PROTECTIVE STANDS

MODEL	DESCRIPTION	ORDER NUMBER
ST-PS-DM	Deviating mirror mounting kit (contains 2 T-nuts)	95ASE1770
	COMPATIBILITY	
	SG-DM Mirrors in SG-PSB protective stands	
NOTE		
For each mirror (SG-DM xxx) order 1 kit.		

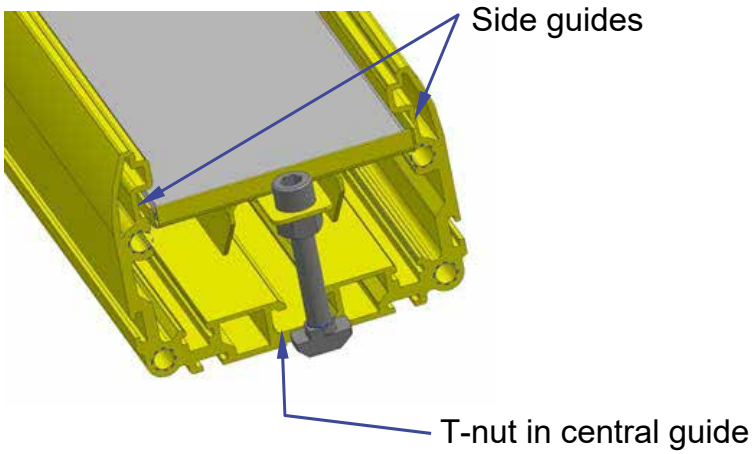

Mounting kits for safety light curtains

MODEL	DESCRIPTION	ORDER NUMBER
ST-PS4-SG BODY	Protective stand mounting kit for SG BODY BIG (4 brackets)	95ASE1730
ST-PS6-SG BODY	Protective stand mounting kit for SG BODY BIG (6 brackets)	95ASE1740
ST-PS4-SG-SE	Protective stands mounting kit for SG/SE (4 brackets)	95ASE1750
ST-PS6-SG-SE	Protective stands mounting kit for SG/SE (6 brackets)	95ASE1760
COMPATIBILITY		
ST-PSx-SG-SE	SG2 BASE SG2 EXTENDED SG2 MUTING SG4 BASE SG4 EXTENDED SG BODY COMPACT	
ST-PSx-SG BODY	SG BODY BIG SG BODY REFLECTOR	

NOTES

1) Each kit allows to install an element (emitter or receiver, active part or passive part) of a light curtain.
To install both elements of the light curtain, order 2 kits of the same type.

2) For light curtains with height ≥ 1200 mm, order the 6 brackets kits (ST-PS6-SG xxxx)

Rev. 07, 05/2020

ACCESSORIES FOR MUTING

Some models of Safety Light Curtains series SG BODY COMPACT MUTING and SG BODY REFLECTOR MUTING are provided with active/passive muting arms in the packaging, but it's also possible to add muting arms as accessories (if the light curtain has integrated muting function).
Instead of using the active/passive arm couple, in which on side is an active sensor, and the other is a passive reflector, in order to reach longer operating distance or to contrast the effect of environmental conditions, is possible to order also "F/G" muting arm couples, composed by an emitter and a receiver arm.

IMPORTANT NOTICE: For safety reasons, L muting arms should be used only for openings through which goods must exit from the dangerous area: for openings in which goods must enter the dangerous area, as well as for bi-directional movements, use T muting arms.

Integrated Muting Arms

ACTIVE/PASSIVE ARMS

MODEL	DESCRIPTION	ORDER NUMBER
SG-L-ARMS V2	Active/Passive arms Couple for L muting	95ASE1861
SG-T-ARMS V2	Active/Passive arms Couple for T muting	95ASE1871
SG-AS-ARM V2	Active sensor single arm	95ASE1841
SG-PR-ARM V2	Passive reflector single arm	95ASE1851

EMITTER/RECEIVER ARMS

SG-F1-G1-ARMS	Emitter/Receiver arms couple (first couple)	95ASE1880
SG-F2-G2-ARMS	Emitter/Receiver arms couple (second couple)	95ASE1890

SG-L-ARMS

SG-T-ARMS

BRACKETS AND CABLES

MODEL	DESCRIPTION	ORDER NUMBER
SG-CB-B	Muting arms mounting bracket kit for BIG series	95ASE1920
SG-CB-C	Muting arms mounting bracket kit for COMPACT series	95ASE1930
CV-Y1-02-B-007	M12 4 pole T muting cable	95ACC2560
CV-L1-02-B-007	M12 4 pole L muting cable	95ACC2570

CV-L1-02-B-007

CV-Y1-02-B-007

COMPATIBILITY AND OPERATING DISTANCES

MUTING ARM	LIGHT CURTAIN	OPERATING DISTANCE
SG-L-ARMS V2 SG-T-ARMS V2	SG BODY COMPACT MUTING SG2 MUTING SG4 EXTENDED	0.5 ... 3 m
SG-AS-ARM V2 SG-PR-ARM V2	SG BODY COMPACT MUTING SG BODY REFLECTOR MUTING SG2 MUTING SG4 EXTENDED SG4 BODY BIG MUTING SHORT RANGE [A]	0.5 ... 3 m
SG-F1-G1-ARMS SG-F2-G2-ARMS	SG2 BODY BIG MUTING SG4 BODY BIG MUTING SHORT RANGE [A] SG BODY COMPACT MUTING	0.5 ... 7 m

NOTES

[A] SG4 BODY MUTING LONG RANGE (whose operating range is 6 ... 60 m) can't be used in combination with muting arms.

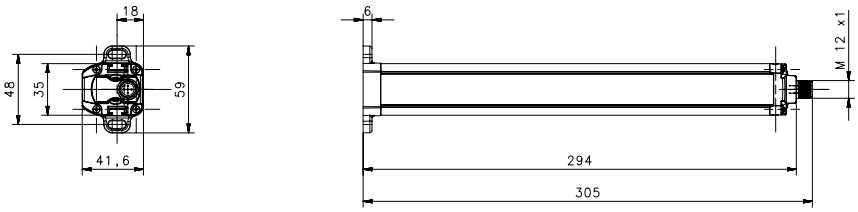

SG-AS-ARM V2

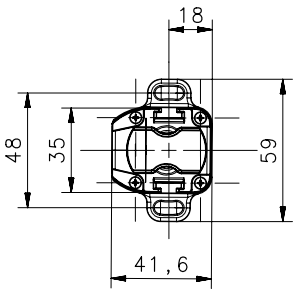

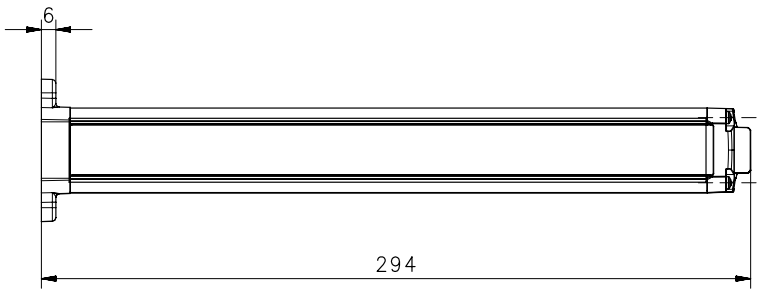

SG-PR-ARM V2

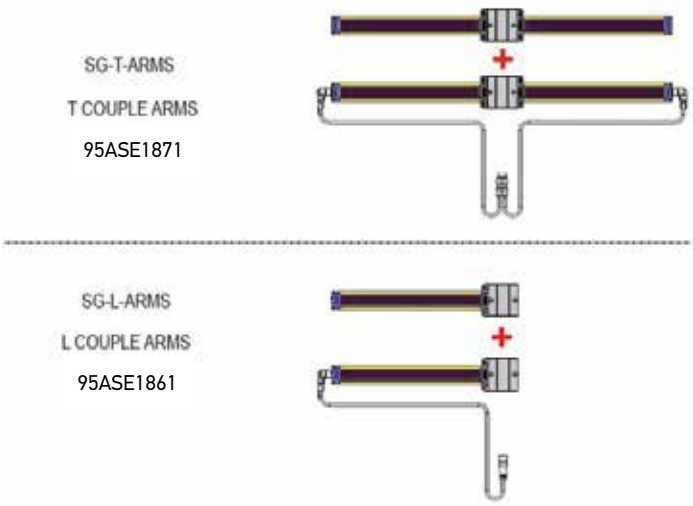

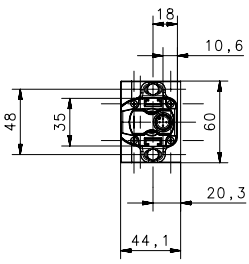

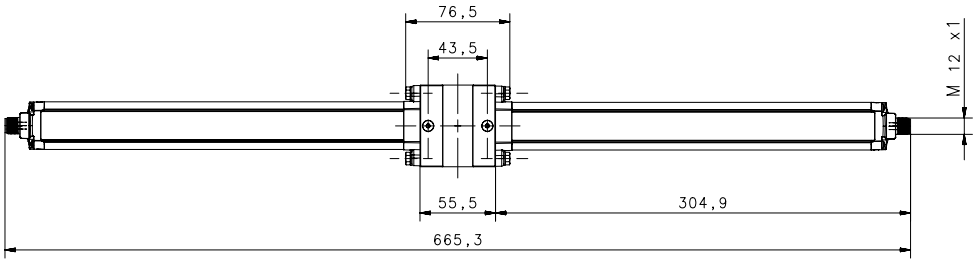

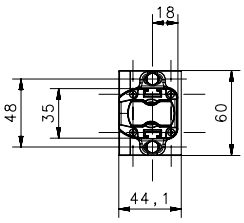

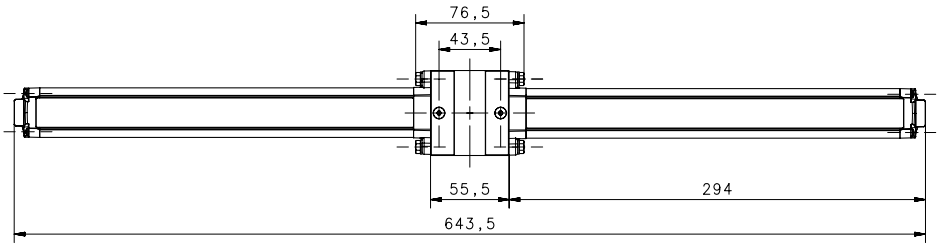

SG-PR-ARM V2 (T muting cable CV-Y1-02-B-007 is included)

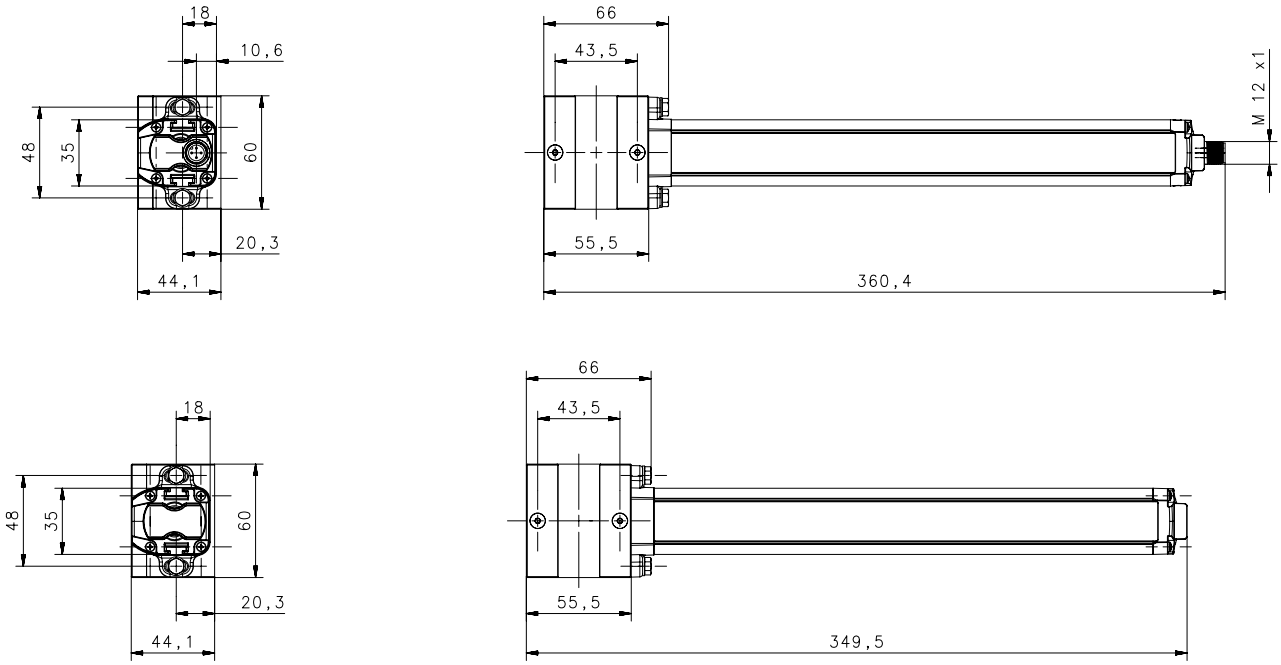

SG-L-ARMS V2 (L muting cable CV-L1-02-B-007 is included)

ORDERING SUMMARY TABLE FOR MUTING ACCESSORIES

SAFETY LIGHT CURTAIN	MUTING	TYPE	SG-L-ARMS V2	SG-T-ARMS V2	SG-AS-ARM V2	SG-PR-ARM V2	SG-CB-B	SG-CB-C	CV-L1-02-B-007	CV-Y1-02-B-007	SG-F1G1-ARMS	SG-F2G2-ARMS
SG BODY BIG MUTING	L	RRX			1	1	2		1			
	T	RRX			2	2	2			1		
	L	F/G					2		2		1	
	T	F/G					2			2	1	1
SG BODY REFLECTOR (ACTIVE AND PASSIVE SIDES)	L	RRX			1	1	2		1			
	T	RRX			2	2	2			1		
SG BODY COMPACT MUTING	L	RRX	1									
	L	RRX			1	1		2	1			
	T	RRX		1								
	T	RRX			2	2		2		1		
	L	F/G						2	2		1	
	T	F/G	1					2		2	1	1
SG2 MUTING SG4 EXTENDED	L	RRX	1									
	T	RRX		1								

NOTES

RRX = Active/Passive retroreflective muting arms
F/G = Emitter/Receiver muting arms

EXAMPLES

1) To realize an L muting with retroreflective arms starting from a SG BODY COMPACT MUTING, order the complete kit SG-L-ARMS or, in alternative, the following: 1x SG-AS-ARM, 1x SG-PR-ARM, 2X SG-CB-C, 1X CV-L1-02-B-007 .
2) To realize a T muting with emitter/receiver arms, starting from a SG BODY BIG MUTING, order the following: 2x SG-CB-B, 2x CV-Y1-02-B-007, 1x SG-F1G1-ARMS, 1x SG-F2G2-ARMS.

Rev. 07, 05/2020

EXTERNAL SENSORS MUTING ARMS: SG-M

Modular, ready-to-use muting sensor kit for flexible installation

The SG-M muting sensors kit regulates the position and orientation of muting beams in order to adapt quickly and easily to any kind of situation.

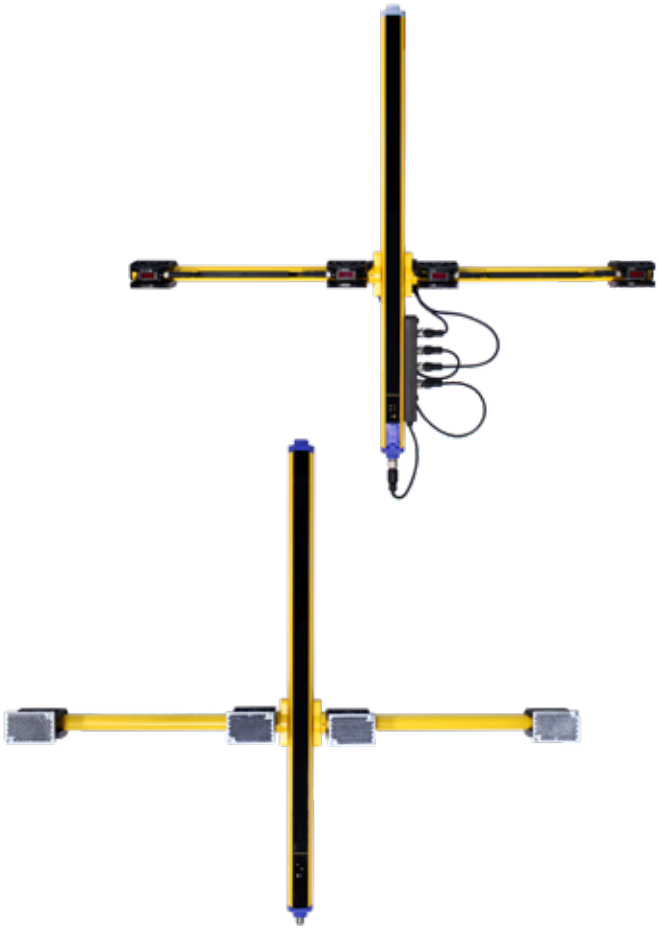

APPLICATIONS

- Palletizers / Depalletizers
- Conveyor lines

INDUSTRIES

- Material Handling
- Food & Beverage
- Metal working
- Automotive
- Wood
- Ceramics

CE

c UL US LISTED

SG-ML-S8-200-L

MUTING CONFIGURATION	
L	L configuration: 2 sensors, 2 reflectors. Parallel beams. Monodirectional (Exit only).
T	T configuration: 4 sensors, 4 reflectors. Parallel beams. Bidirectional.
X	X configuration: 2 sensors, 2 reflectors. Crossed beams. Bidirectional.

MUTING SENSOR	
S8	2 x S8-PR-5-B01-PP
S100	2 x S100-PR-5-B10-PK

CABLE LENGTH	
---	700 mm
200	2000 mm

ARM ORIENTATION	
L	Left: the muting arm is to the left, looking at light curtain receiver
R	Right: muting arm is to the right, looking at light curtain receiver

A flexible solution for muting

In some access guarding applications, like in palletizing/depallitizing machines, safety light curtains are muted while a load passes through their monitored area.
When the load has an irregular shape, or has holes in it, muting can end before the load has completely passed the light curtain, causing the unnecessary stop of the machine. In cases like this, the ability to regulate the position and orientation the position and orientation of muting beams with increased flexibility, allows the system to adapt quickly and easily to any kind of situation.
To simplify the installation of muting sensors in these kind of applications, Datalogic has developed the new SG-M muting sensors modular Kits. The SG-M includes retroreflective photocells as muting sensors, reflectors, cylindrical metallic arms, orientable plastic brackets, cables with M12 connectors, and a connection box for the quick wiring of the sensor outputs to the safety light curtain dedicated muting connector.
The SG-M is the newest addition to a safety portfolio that includes integrated muting arms (SG-T-ARM and SG-L-ARM).

The arms with external sensors can be attached directly to the light curtains of SG Series (fig. 1) or to their protective stands SG-PSB (fig. 2).
With SG-M, three standard configurations for muting beams can be easily installed: T Muting (fig.3), L Muting (fig. 4 and 5) and X Muting (fig. 6).
Sensors provided with the kit are retroreflective, dark on photocells, and come in two versions:
- S100-PR-5-B10-PK, for standard applications with no specific requirements
- S8-PR-5-B01-PP for applications where beam intensity reulation is required.

On the opposite side of the sensors, an ù reflector is mounted.
Sensors and reflectors can be positioned along the arms and orientated both horizontally and vertically thanks to their brackets shape.
Sensors have detachable cables (in T and L muting kits) or pigtails. Both cables have an M12 connector M12 connector, for a quick connection to the safety light curtains through a dedicated connection box (SG-M-CB), or to an external safety controller through normal cables.
The cables are protected inside the metallic arms and have different lengths (700 and 2000 mm), for easy installation on the light curtains, or on the protective stands.

Fig. 1

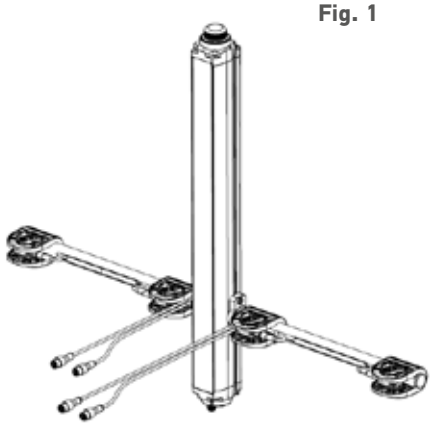

Muting arms attached on the light curtain

Fig. 2

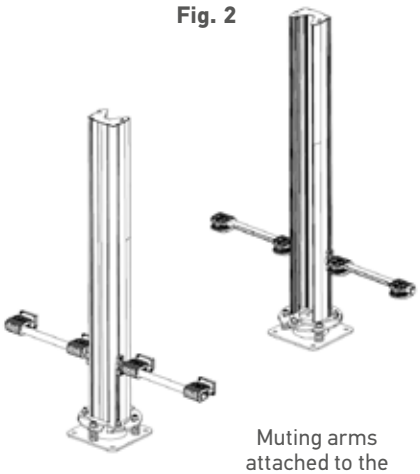

Muting arms attached to the protective stands

Fig. 3

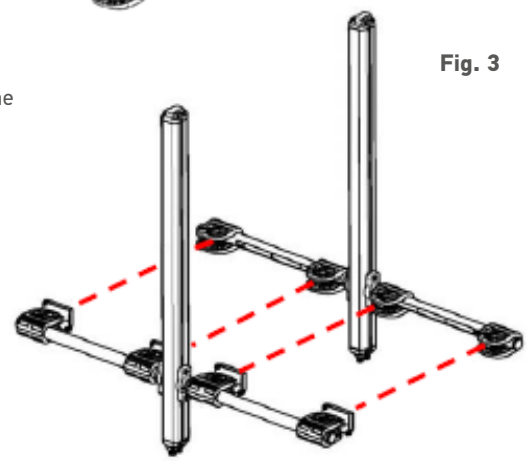

T muting configuration

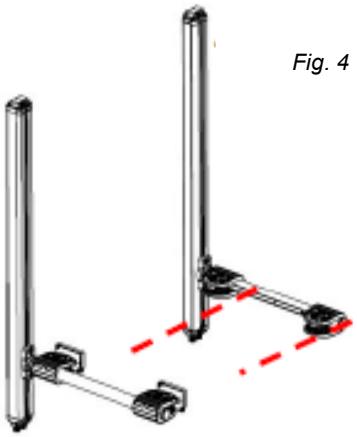

Fig. 4

L muting configuration with orientation to the right.

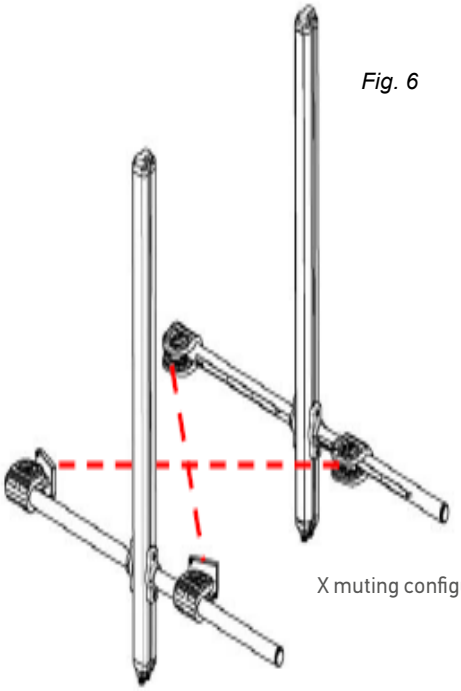

Fig. 6

X muting configuration

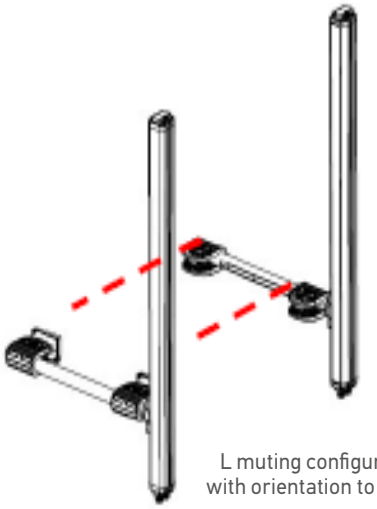

Fig. 5

L muting configuration with orientation to the left

SG-M MUTING KITS

The following table shows the characteristics, the sensors and the cables included in any SG-M muting configuraion kit in addition to the mechanical parts (arms and brackets) necessary to connect them to the profiles of the SG family safety light curtains.

MUTING CONFIGURATION	MODEL	DIRECTION *1	SENSOR ADJUSTMENT TRIMMER	MIN/MAX DISTANCE *4	SENSORS *2	CABLES *3	ORDER NUMBER
L Muting	SG-ML-S100-L	left side	No	0.2 ... 3 m	2 x S100-PR-5-B10-PK	2 x CS-M1-02-B-007 (700 mm)	95ASE2620
	SG-ML-S100-R	right side	No	0.2 ... 3 m	2 x S100-PR-5-B10-PK	2 x CS-M1-02-B-007 (700 mm)	95ASE2430
	SG-ML-S100-200-L	left side	No	0.2 ... 3 m	2 x S100-PR-5-B10-PK	2 x CS-M1-02-B-02 (2000 mm)	95ASE2610
	SG-ML-S100-200-R	right side	No	0.2 ... 3 m	2 x S100-PR-5-B10-PK	2 x CS-M1-02-B-02 (2000 mm)	95ASE2400
	SG-ML-S8-L	left side	Yes	0.2 ... 3 m	2 x S8-PR-5-B01-PP	2 x CS-M1-02-B-007 (700 mm)	95ASE2600
	SG-ML-S8-R	right side	Yes	0.2 ... 3 m	2 x S8-PR-5-B01-PP	2 x CS-M1-02-B-007 (700 mm)	95ASE2370
	SG-ML-S8-200-L	left side	Yes	0.2 ... 3 m	2 x S8-PR-5-B01-PP	2 x CS-M1-02-B-02 (2000 mm)	95ASE2590
	SG-ML-S8-200-R	right side	Yes	0.2 ... 3 m	2 x S8-PR-5-B01-PP	2 x CS-M1-02-B-02 (2000 mm)	95ASE2340
T Muting	SG-MT-S100		No	0.2 ... 3 m	4 x S100-PR-5-B10-PK	4 x CS-M1-02-B-007 (700 mm)	95ASE2440
	SG-MT-S100-200		No	0.2 ... 3 m	4 x S100-PR-5-B10-PK	4 x CS-M1-02-B-02 (2000 mm)	95ASE2410
	SG-MT-S8		Yes	0.2 ... 3 m	4 x S8-PR-5-B01-PP	4 x CS-M1-02-B-007 (700 mm)	95ASE2380
	SG-MT-S8-200		Yes	0.2 ... 3 m	4 x S8-PR-5-B01-PP	4 x CS-M1-02-B-02 (2000 mm)	95ASE2350
X Muting	SG-MX-S100		No	0.45 ... 3 m	2 x S100-PR-2-B10-PK SV4973	pigtail 700 mm	95ASE2450
	SG-MX-S100-200		No	0.45 ... 3 m	2 x S100-PR-2-B10-PK SV4974	pigtail 2000 mm	95ASE2420
	SG-MX-S8		Yes	0.6 ... 3 m	2 x S8-PR-5-B01-PP SV4973	pigtail 700 mm	95ASE2390
	SG-MX-S8-200		Yes	0.6 ... 3 m	2 x S8-PR-5-B01-PP SV4974	pigtail 2000 mm	95ASE2360

NOTE

*1 "Left side" and "Right side", related to L muting kits, refers to the position of the arm looking towards the receiver of the light curtain.
"Left side" and "Right side" kits differ only mechanically, in order to keep the regulating screws upside.
*2 In X Muting Kits, special versions of photocells with pigtails and M12 connectors have been used.
*3 Cables used in T and L muting kits have M8 connectors on the sensors side, and M12 connectors at the external side.
*4 Minimum distance of 0.2 m is determined by the light curtain. Maximum distance of 3 m is to avoid interferences between muting sensors

COMPATIBILITY

SG BODY COMPACT MUTING
SG BODY BIG MUTING
SG BODY REFLECTOR MUTING
SG2 MUTING
SG4 EXTENDED
SG-PSB (only models with 2000 mm cables (SG-Mx-xxx-200-x)

DIMENSIONS

SG-M-T Active Side

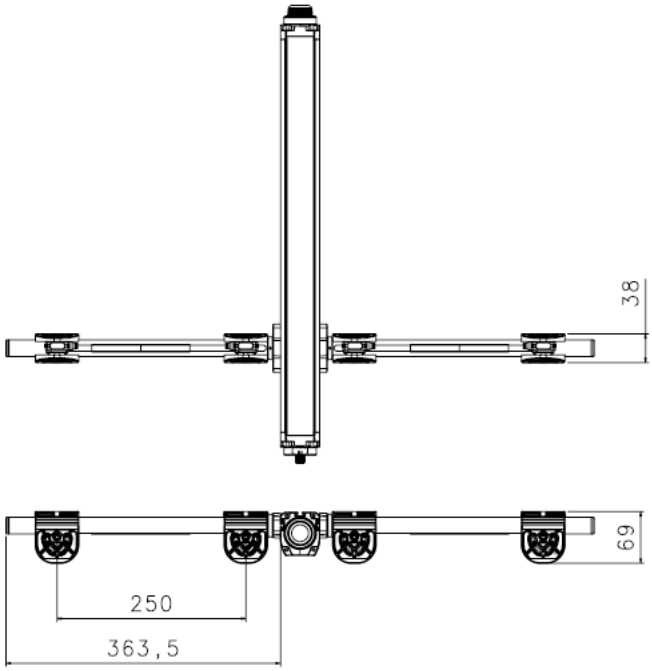

SG-M-T Passive Side

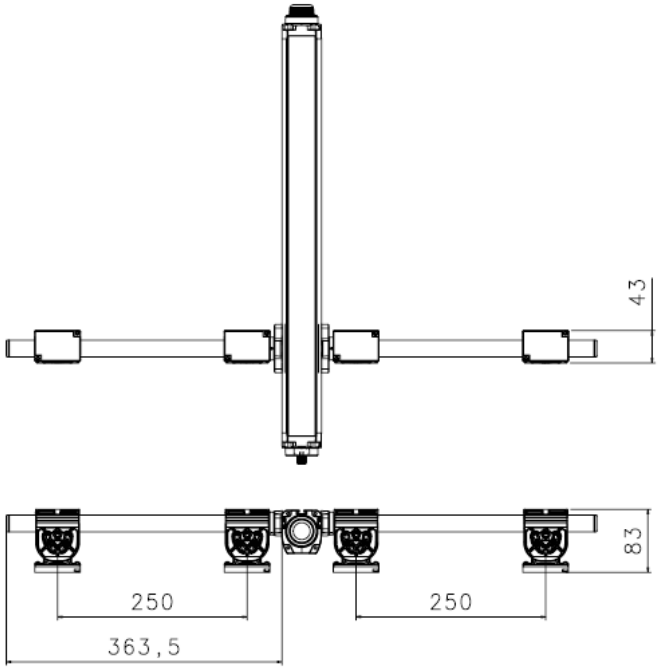

SG-M-X Active Side

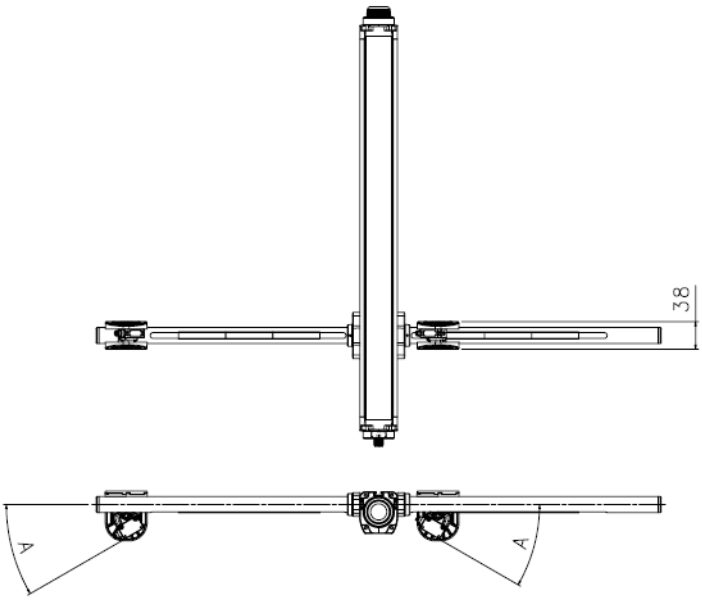

Angle/Sensor Type	S100	S8
A	38°	31°

SG-M-X Passive Side

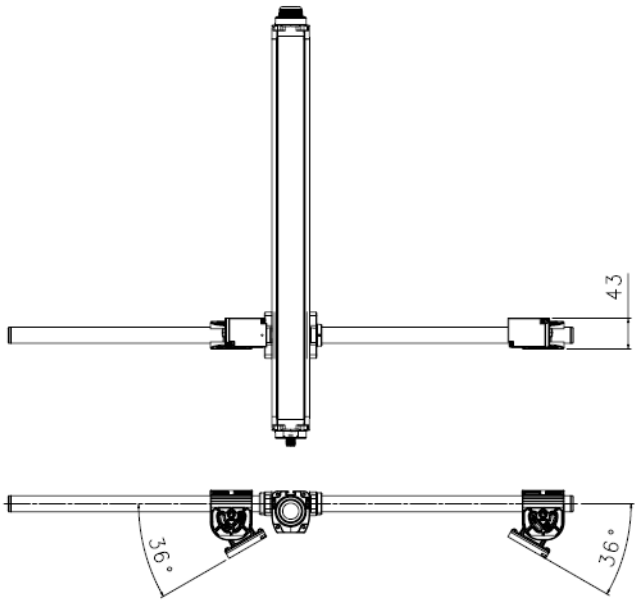

SG-M-CB CONNECTION BOX

The SG-M connection box has 4 M12 connectors on board, one for each muting sensor to be connected to an SG Series light curtain.
Unused connectors need to be covered by a cap, in order to maintain IP65 protection.

A green LED indicator signals when the muting sensor is generating the corresponding muting signal towards the safety light curtain.

Inside the connection box, signals are put in parallel: A1 with A2 and B1 with B2, and forwarded to the pigtail connector, that has to be inserted into the muting connector of the light curtain.

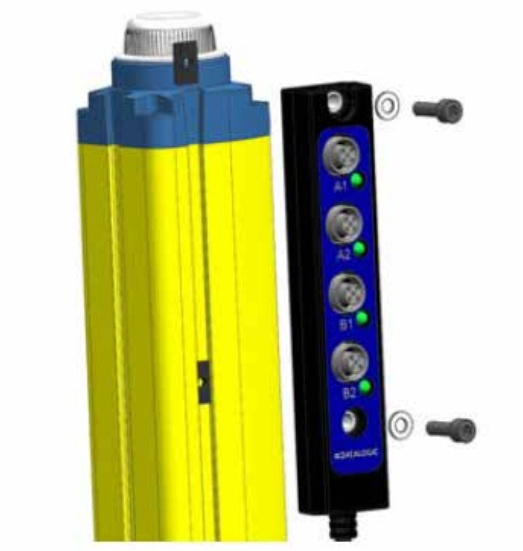

MODEL	DESCRIPTION	ORDER NUMBER
SG-M-CB	Connection Box for SG-M kits	95ASE2500
SG-M-CB-KIT	SG-M-CB Mounting Kit	95ASE2830
NOTES		
SG-M-CB-KIT contains screws, whasers and fixing guides needed to connect SG-M-CB to the profile of SG family Safety light curtains.		
COMPATIBILITY		
SG BODY COMPACT MUTING SG BODY BIG MUTING SG BODY REFLECTOR MUTING SG2 MUTING SG4 EXTENDED SG-PSB (mechanical compatibility)		

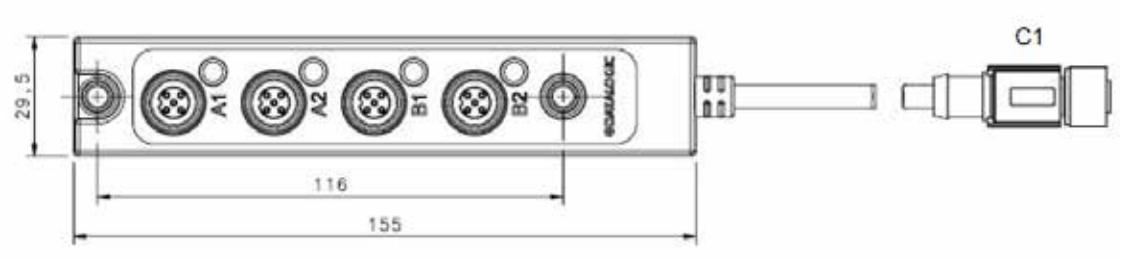

PIN #	S8	S100
1	+24 Vdc	
2	Alarm output	Light/Dark selection
3	0 Vdc	
4	PnP Output	

S100 AND S8 SENSORS

MODEL	CHARACTERISTICS	REGULATIONS	MAX. OPERATING DISTANCE	CONNECTION	ORDER NUMBER
S100-PR-5-B10-PK	Polarized retroreflective, red LED, PnP Output, Plastic	Dark/Light	6 m	M8	950811310
S100-PR-2-B10-PK SV4972				400 mm pigtail M12	950815060
S100-PR-2-B10-PK SV4973				700 mm pigtail M12	950815070
S100-PR-2-B10-PK SV4974				2000 mm pigtail M12	950815080
S8-PR-5-B01-PP		Dark/Light Mono-turn sensitivity adjustment trimmer	7 m	M8	950801160
S8-PR-5-B01-PP SV4972				400 mm pigtail M12	950805340
S8-PR-5-B01-PP SV4973				700 mm pigtail M12	950805350
S8-PR-5-B01-PP SV4974				2000 mm pigtail M12	950805360

NOTES

1* With reflector R6

For more detailed technical information about the sensors, refer to Datasheed of S100 or S8 families.

S8 SETTINGS

DARK

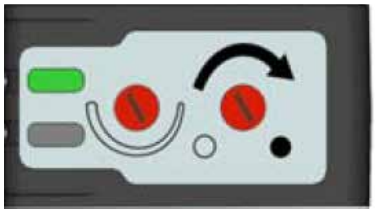

Rotate trimmer in a clockwise direction to set the DARK mode (output ON in presence of the object).

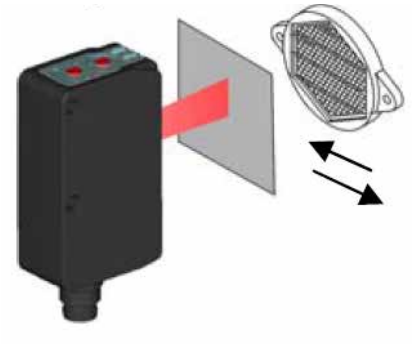

Position the sensor in front of its reflector

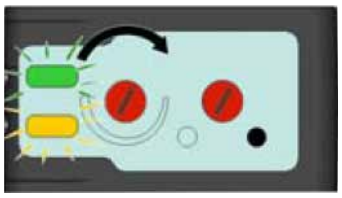

If needed, regulate the intensity of the beam by rotating the adjustment trimmer

SPARE PARTS

MODEL	NOTES	ORDER NUMBER
SG-M-ARM	Cylindrical Metallic Arm	95ASE2460
CS-M1-02-B-004	4 poles M8 female M12 male cable 400mm	95ASE2470
CS-M1-02-B-007	4 poles M8 female M12 male 700mm	95ASE2480
CS-M1-02-B-02	4 poles M8 female M12 male 2000mm	95ASE2490
SG-M BRACKET	Single plastic orientable bracket, to mount S8, S100, or R6	95ASE2630
R6	Prismatic reflector 36 x 55 mm - plastic support 40.5 x 60 mm	95A151350

The company endeavours to continuously improve and renew its products; for this reason the technical data and contents of this catalogue may undergo variations without prior notice. For correct installation and use, the company can guarantee only the data indicated in the instruction manual supplied with the products.

Rev. 07, 05/2020

Mounting kits for mirrors

Depending on the risk assessment, an indicator to show when the muting function is active can be necessary. This indicator shows that the normal protective function of the light curtain is temporary suspended. The muting indicator should have sufficient brightness and be installed so as to be readily visible from any foreseeable position where a person can attempt to access the hazard zone.

MODEL	DESCRIPTION	ORDER NUMBER
LMS	Muting lamp	95ASE1830
LMS-1	Modular Muting lamp	95ACC1990
LMS-2	Muting lamp - horizontal mounting	95ACC2000
LMS-3	Muting lamp - vertical mounting	95ACC2010
SU-LMS-1A	Basic support for LMS-1	95ACC2020
SU-LMS-1B	Tower module for LMS-1	95ACC2030

NOTES

1) LMS, LMS-1, LMS-2 and LMS-3 are provided with incandescent light bulbs (3W, 24V)
2) LMS-1 has to be ordered with one of the two supports: SU-LMS-1A or SU-LMS-1B
3) External muting lamp is also available con Muting Connection Box SG-SRT2

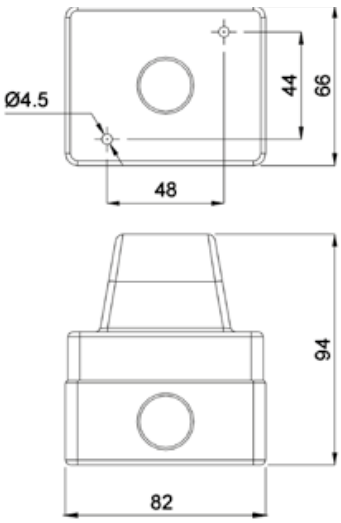

LAMP LMS

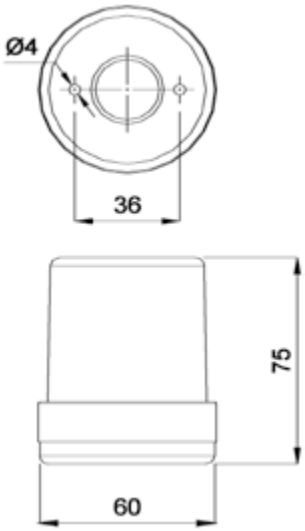

LAMP LMS-2

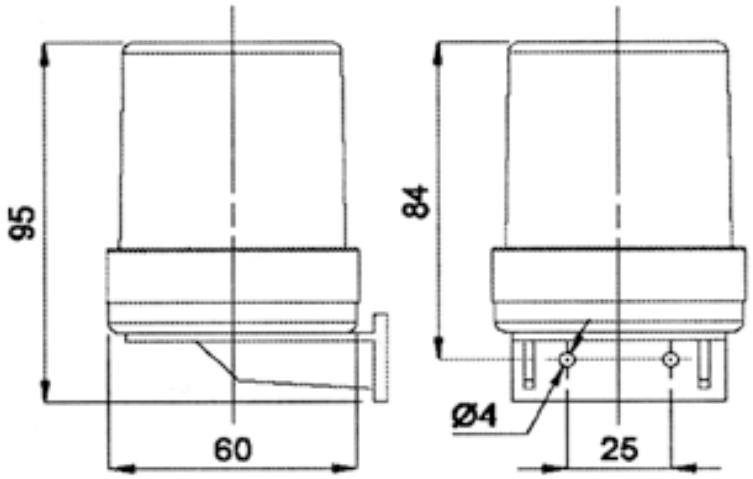

LAMP LMS-3

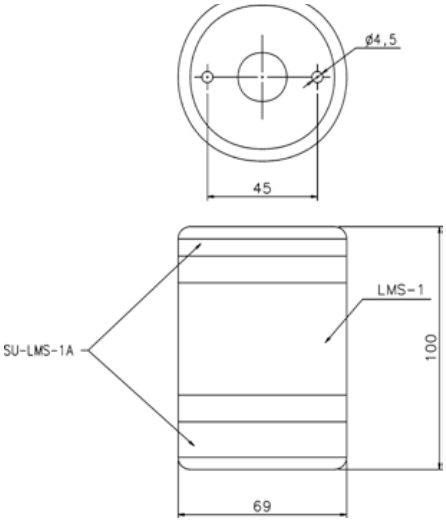

SUPPORT SU-LMS-1A
LAMP LMS-1

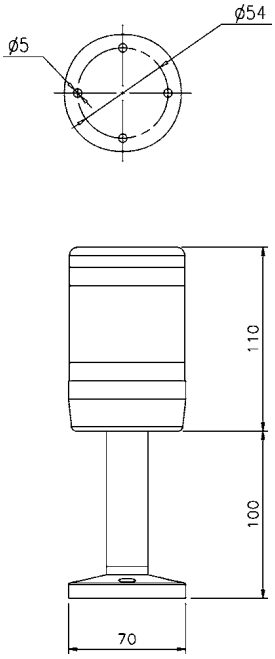

SUPPORT SU-LMS-1B
LAMP LMS-1

The company endeavours to continuously improve and renew its products; for this reason the technical data and contents of this catalogue may undergo variations without prior notice. For correct installation and use, the company can guarantee only the data indicated in the instruction manual supplied with the products.

SAFETY UNITS AND INTERFACES

SE-SR2 is a safety unit that can be used in combination with every DATALOGIC Safety Light Curtains.
It provides dual-channel operation without detection of shorts across contacts.
Short circuits and earth faults in the pushbutton circuit are detected.
CS-ME is an interface with two forcibly guided relays, providing 3 NO contacts. The diagnostic function must be performed by the Safety Light Curtains through External Device Monitoring function.

	SE-SR2	CS-ME
GENERAL DATA		
PL (EN ISO 13849-1)	e	up to e (depending on ESPE)
SIL (IEC 61508)	3	up to 3 (depending on ESPE)
ELECTRICAL DATA		
Power supply	24 Vdc -15/+10%	24 Vdc -/+20%
Outputs		
Safe outputs (Cat. 4)	3 NO	3 NO
Auxiliary outputs	1 NC	1 NC
Response time		
Following input going OFF	typ. 10 ms, max. 20 ms	20 ms
With power failure	typ. 70 ms, max. 120 ms	20 ms
Recovery time		
Following inputs going ON	50 ms	40 ms
After power on	150 ms	40 msz
MECHANICAL AND ENVIRONMENTAL DATA		
Operating temperature	-10 ... +55°C	-25 ... +55°C
Humidity	15 ... 95 % (no condensation)	15 ... 95 % (no condensation)
Mechanical protection	IP20	IP20
FUNCTIONS		
Reset modes	Automatic/Manual/Monitored	Automatic
External Device Monitoring	Available on SE-SR2	Must be activated on Safety Light Curtain (ESPE)
COMPATIBILITY		
	All DATALOGIC Safety Light Curtains	All DATALOGIC Safety Light Curtains with EDM function: SG2 EXTENDED SG2 MUTING SG2 BASE, SG4 BASE SG BODY COMPACT SG BODY BIG SG BODY REFLECTOR SG BODY COMPACT SG4 EXTENDED SLIM

INTERNAL DIAGRAM OF SE-SR2

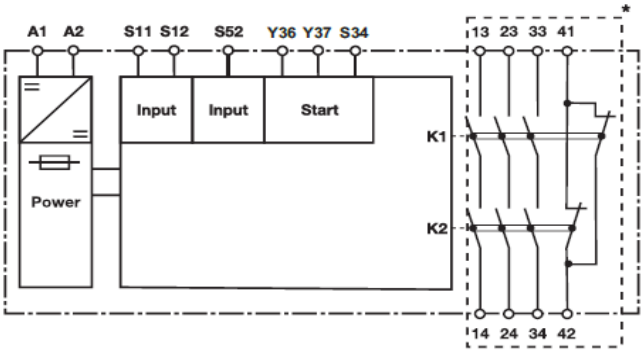

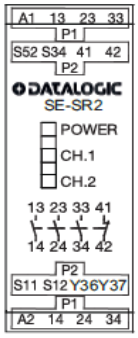

IMPORTANT: For the correct wiring refer to SE-SR2 manual.

SE-SR2 DIMENSIONS

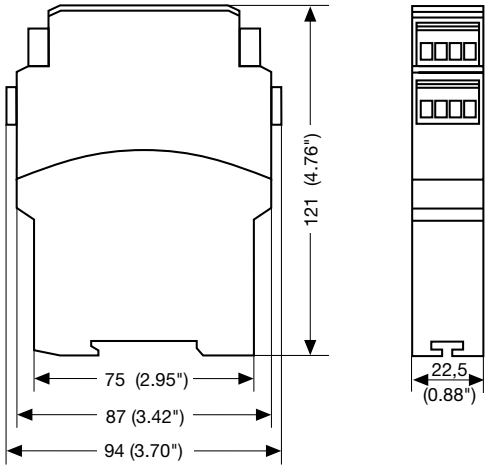

CS-ME DIMENSIONS

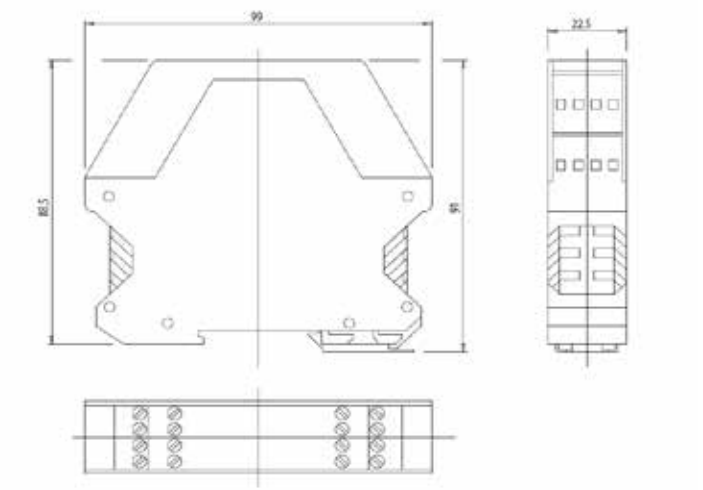

CS-ME INTERNAL DIAGRAM

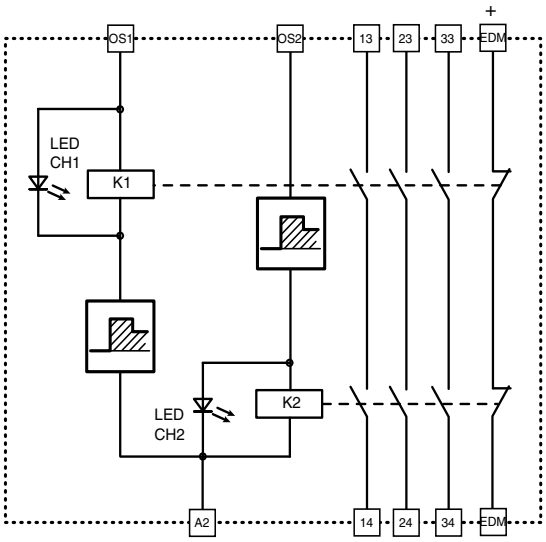

CS-ME WIRING DIAGRAM

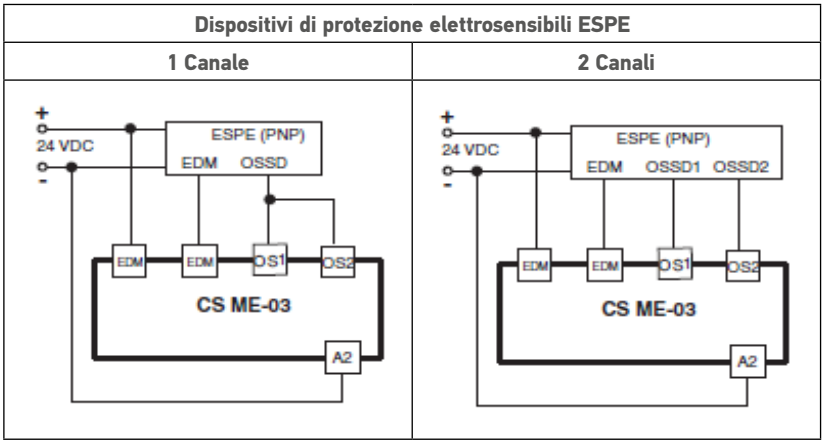

MODEL	DESCRIPTION	ORDER NUMBER
SE-SR2	Safety Unit	95ACC6170
CSME-03VU24-Y14	Forcibly guided relay interface	95ASE1270

Connection Boxes

SG-SRT1 and SG-SRT2 are interfaces provided with redundant forcibly guided relays, supplying a ready operator interface to restart or override the Safety Light Curtain, and have muting indication.

SG-SRT-1

SG-SRT-2

	SG-SRT1	SG-SRT2
ELECTRICAL DATA		
Power supply	24 Vdc +/- 20%	
Safe outputs	2 NO	
Max. switchable voltage	250 Vac	
Max. switchable current	2 A	
FUNCTIONS		
Reset mode	Automatic/Manual	
	Test	
	Reset	
	Restart	
	Override	
	---	Muting state indication
COMPATIBILITY		
	SG BODY COMPACT MUTING SG BODY BIG MUTING SG BODY REFLECTOR MUTING	SG BODY BIG MUTING SG BODY REFLECTOR MUTING

NOTE

SG-SRT1 and SG-SRT2 provide internal or external EDM signal to the Safety Light Curtain: to operate safely, EDM monitoring function must be activated on the Safety Light Curtain and correct wiring must be followed.
For further information refer to SG-SRT1/2 manual and the used Safety Light Curtain manual.

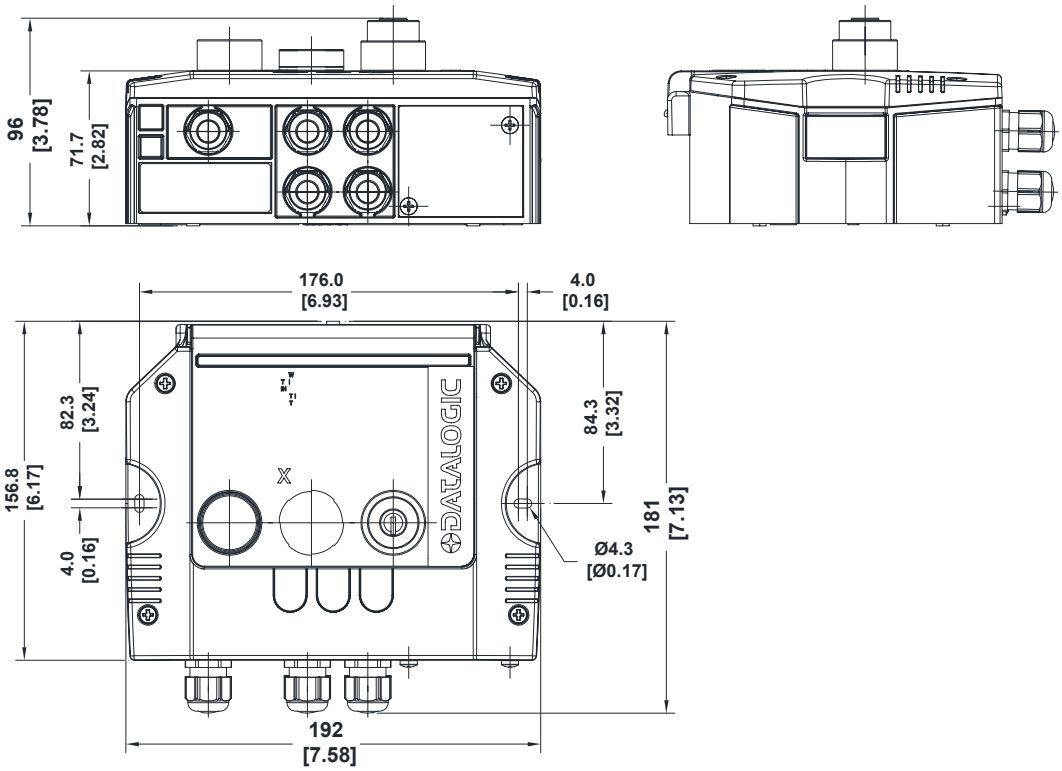

MODEL	DESCRIPTION	ORDER NUMBER
SG -SRT-1	Muting connection box	95ASE2050
SG -SRT-2	Muting connection box with lamp	95ASE2060

The company endeavours to continuously improve and renew its products; for this reason the technical data and contents of this catalogue may undergo variations without prior notice. For correct installation and use, the company can guarantee only the data indicated in the instruction manual supplied with the products.

OTHER ACCESSORIES

Protection tubes

SG-IP69K are PMMA acrylic tubes used to protect and seal safety light curtains.
The IP protection of the safety light curtain is increased to IP67, IP68 and IP69K.
A Gore-Tex membrane on the caps prevents water or dirt entering as well as internal condensation.

MODEL	DESCRIPTION	ORDER NUMBER
SG -IP69K 150	Tubular IP69K H=150mm	95ASE 1290
SG -IP69K 300	Tubular IP69K H=300mm	95ASE 1300
SG -IP69K 450	Tubular IP69K H=450mm	95ASE 1310
SG -IP69K 600	Tubular IP69K H=600mm	95ASE 1320
SG -IP69K 750	Tubular IP69K H=750mm	95ASE 1330
SG -IP69K 900	Tubular IP69K H=900mm	95ASE 1340
SG -IP69K 1050	Tubular IP69K H=1050mm	95ASE 1350
SG -IP69K 1200	Tubular IP69K H=1200mm	95ASE 1360
SG -IP69K 1350	Tubular IP69K H=1350mm	95ASE 1370
SG -IP69K 1500	Tubular IP69K H=1500mm	95ASE 1380
SG -IP69K 1650	Tubular IP69K H=1650mm	95ASE 1390
SG -IP69K 1800	Tubular IP69K H=1800mm	95ASE 1400
COMPATIBILITY		
SG2 BASE, SG2 EXTENDED, SG4 BASE		
MODEL	DESCRIPTION	ORDER NUMBER
SG-IP69K-2-050	Tubular IP69K H=500mm	95ASE1410
SG-IP69K-3-080	Tubular IP69K H=800mm	95ASE1420
SG-IP69K-4-090	Tubular IP69K H=900mm	95ASE1430
SG-IP69K-4-120	Tubular IP69K H=1200mm	95ASE1440
COMPATIBILITY		
SG BODY COMPACT		

NOTES

1) Each package contains the necessary to protect a single unit (emitter or receiver).
   To protect both elements of a couple, order two pieces
2) Tubular PMMA POLICRIL material chemical resistance table is available on product's datasheet.

DIMENSIONS

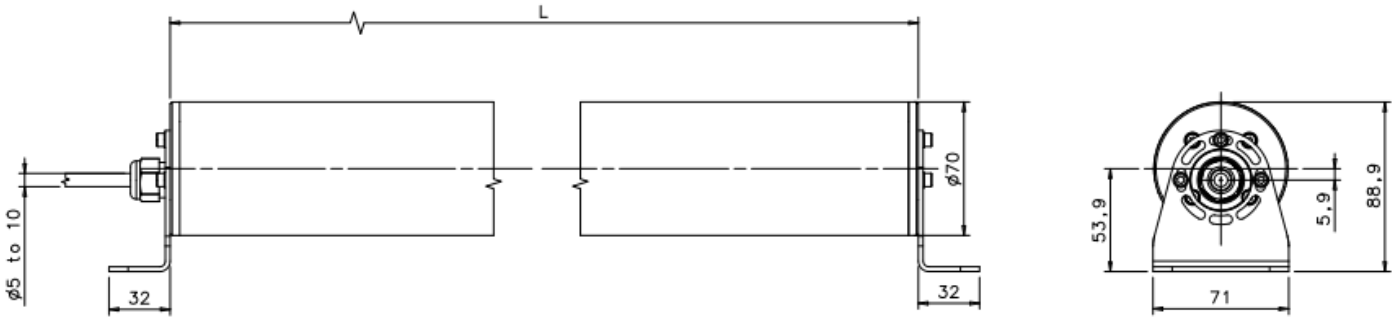

MODEL	L (mm)
SG-IP69K 150	373.5
SG-IP69K 300	520.7
SG-IP69K 450	670.8
SG-IP69K 600	820.7
SG-IP69K 750	970.8
SG-IP69K 900	1120.7
SG-IP69K 1050	1270.7
SG-IP69K 1200	1420.8
SG-IP69K 1350	1570.7
SG-IP69K 1500	1720.8
SG-IP69K 1650	1870.8
SG-IP69K 1800	2020.8
SG-IP69K-2-050	813
SG-IP69K-3-080	1113
SG-IP69K-4-090	1213.5
SG-IP69K-4-120	1513.5

Lens shields

The LENS SHIELD accessory for safety light curtains is composed of a PMMA Altuglas plate that can be mounted on the front glass of the safety light, ensuring an effective protection against dust, chips and incandescent drops deriving from material working near the safety light curtain.

MODEL	DESCRIPTION	ORDER NUMBER
SG -LS 150	Lens shield 150 mm	95ASE1450
SG -LS 300	Lens shield 300 mm	95ASE1460
SG -LS 450	Lens shield 450 mm	95ASE1470
SG -LS 600	Lens shield 600 mm	95ASE1480
SG -LS 750	Lens shield 750 mm	95ASE1490
SG -LS 900	Lens shield 900 mm	95ASE1500
SG -LS 1050	Lens shield 1050 mm	95ASE1510
SG -LS 1200	Lens shield 1200 mm	95ASE1520
SG -LS 1350	Lens shield 1350 mm	95ASE1530
SG -LS 1500	Lens shield 1500 mm	95ASE1540
SG -LS 1650	Lens shield 1650 mm	95ASE1550
SG -LS 1800	Lens shield 1800 mm	95ASE1560
SG -LS 2	Lens shield 2 beams 500 mm	95ASE1570
SG -LS 3	Lens shield 3 beams 800 mm	95ASE1580
SG -LS 4-900	Lens shield 4 beams 900 mm	95ASE1590
SG -LS 4-120	Lens shield 4 beams 1200 mm	95ASE1600
	COMPATIBILITY	
	SG-LS xxxx	SG2 BASE SG2 EXTENDED SG4 BASE
	SG-LS 2 SG-LS 3 SG-LS 4-900 SG-LS 4-120	SG BODY COMPACT
NOTES		

1) Each package contains the necessary to protect a single unit (emitter or receiver). To protect both elements of a couple, order two pieces
2) Five plates are supplied in the package for replacements
3) The length indicated in the descritpion is the height of the light curtains that can be used with the lens shield, for the actual dimension, refer to the technical datasheet.

Laser Pointer

LASER POINTER

MODEL	DESCRIPTION	ORDER NUMBER
SG-LP	Laser pointer	95ASE5590
	COMPATIBILITY	
	All SG Series Safety Light Curtains except SG4-H and SLIM	

Communication interface

DONGLE

MODEL	DESCRIPTION	ORDER NUMBER
SG4-DONGLE	Ethernet adaptor	95ASE2080
	FUNCTIONS	
	1) Ethernet connection (TCP/IP) to Monitoring and Configuration Software SG4-E GUI. 2) Configuration cloning 3) Error logging 4) Configuration logging	
	COMPATIBILITY	
	SG4 EXTENDED	
NOTE		
To connect SG-DONGLE directly to a PC, order Ethernet cable CAB-ETH-M01		

DONGLE - PC ETHERNET CABLE

MODEL	DESCRIPTION	ORDER NUMBER
CAB-ETH-M01	M12-IP67 ETHERNET CAB. (1M)	93A051346
CAB-ETH-M03	M12-IP67 ETHERNET CAB. (3M)	93A051347
CAB-ETH-M05	M12-IP67 ETHERNET CAB. (5M)	93A051348

Test pieces

MODEL	DESCRIPTION	ORDER NUMBER
TP-14	Test piece Ø 14 mm	95ACC1630
TP-20	Test piece Ø 20 mm	95ACC1640
TP-24	Test piece Ø 24 mm	95ASE2570
TP-30	Test Piece Ø 30 mm	95ACC1650
TP-34	Test Piece Ø 34mm	95ASE2580
TP-35	Test piece Ø 35 mm	95ACC1660
COMPATIBILITY		
All Safety Light Curtains with corresponding resolution		

CABLES

MODEL	DESCRIPTION	START	END	#POLES	LENGTH (m)	SHIELD	ORDER NUMBER
CABLES FOR EMITTERS/RECEIVERS							
CS-A1-02-U-03	CS Cable 4-p axial 3m	M12 axial F	free wires	4	3	No	95ASE1120
CS-A1-02-U-05	CS Cable 4-p axial 5m	M12 axial F	free wires	4	5	No	95ASE1130
CS-A1-02-U-10	CS Cable 4-p axial 10m	M12 axial F	free wires	4	10	No	95ASE1140
CS-A1-02-U-15	CS Cable 4-p axial 15m	M12 axial F	free wires	4	15	No	95ASE1150
CS-A1-02-U-25	CS Cable 4-p axial 25m	M12 axial F	free wires	4	25	No	95ASE1160
CS-A1-03-U-03	CS Cable 5-p axial 3m	M12 axial F	free wires	5	3	No	95ASE1170
CS-A1-03-U-05	CS Cable 5-p axial 5m	M12 axial F	free wires	5	5	No	95ASE1180
CS-A1-03-U-10	CS Cable 5-p axial 10m	M12 axial F	free wires	5	10	No	95ASE1190
CS-A1-03-U-15	CS Cable 5-p axial 15m	M12 axial F	free wires	5	15	No	95ASE1200
CS-A1-03-U-25	CS Cable 5-p axial 25m	M12 axial F	free wires	5	25	No	95ASE1210
CS-A1-03-U-50	CS Cable 5-p axial 50m	M12 axial F	free wires	5	50	No	95A252700
CS-A1-06-U-03	CS Cable 8-p axial 3m	M12 axial F	free wires	8	3	No	95ASE1220
CS-A1-06-U-05	CS Cable 8-p axial 5m	M12 axial F	free wires	8	5	No	95ASE1230
CS-A1-06-U-10	CS Cable 8-p axial 10m	M12 axial F	free wires	8	10	No	95ASE1240
CS-A1-06-U-15	CS Cable 8-p axial 15m	M12 axial F	free wires	8	15	No	95ASE1250
CS-A1-06-U-25	CS Cable 8-p axial 25m	M12 axial F	free wires	8	25	No	95ASE1260
CS-A1-06-U-50	CS Cable 8-p axial 50m	M12 axial F	free wires	8	50	No	95A252710
CS-A1-10-U-03	CS Cable 12-p axial 3m	M12 axial F	free wires	12	3	No	95A252720
CS-A1-10-U-05	CS Cable 12-p axial 5m	M12 axial F	free wires	12	5	No	95A252730
CS-A1-10-U-10	CS Cable 12-p axial 10m	M12 axial F	free wires	12	10	No	95A252740
CS-A1-10-U-15	CS Cable 12-p axial 15m	M12 axial F	free wires	12	15	No	95A252750
CS-A1-10-U-25	CS Cable 12-p axial 25m	M12 axial F	free wires	12	25	No	95A252760
CS-A1-17-U-03	CS Cable 17-p axial 3m	M12 axial F	free wires	17	3	No	95ASE3010
CS-A1-17-U-05	CS Cable 17-p axial 5m	M12 axial F	free wires	17	5	No	95ASE3020
CS-A1-17-U-17	CS Cable 17-p axial 10m	M12 axial F	free wires	17	10	No	95ASE3030
CS-A1-17-U-15	CS Cable 17-p axial 15m	M12 axial F	free wires	17	15	No	95ASE3040
CS-A1-17-U-25	CS Cable 17-p axial 25m	M12 axial F	free wires	17	25	No	95ASE3050
CS-B1-02-G-03	CS Cable 4-p axial 3m	M8 axial F	free wires	4	3	No	95A251420
CS-B1-02-G-05	CS Cable 4-p axial 5m	M8 axial F	free wires	4	5	No	95A251430
CS-B1-02-G-07	CS Cable 4-p axial 7m	M8 axial F	free wires	4	7	No	95A251440
CS-B1-02-G-10	CS Cable 4-p axial 10m	M8 axial F	free wires	4	10	No	95A251480
CS-B2-02-G-03	CS Cable 4-p radial 3m	M8 radial F	free wires	4	3	No	95A251420
CS-B2-02-G-05	CS Cable 4-p radial 5m	M8 radial F	free wires	4	5	No	95A251430
CS-B2-02-G-07	CS Cable 4-p radial 7m	M8 radial F	free wires	4	7	No	95A251440
CS-B2-02-G-10	CS Cable 4-p radial 10m	M8 radial F	free wires	4	10	No	95A251530
CV-A1-22-B-03	CV Cable 4-p axial 3m	M12 axial F	free wires	4	3	Yes	95ACC1480
CV-A1-22-B-05	CV Cable 4-p axial 5m	M12 axial F	free wires	4	5	Yes	95ACC1490
CV-A1-22-B-10	CV Cable 4-p axial 10m	M12 axial F	free wires	4	10	Yes	95ACC1500
CV-A1-22-B-15	CV Cable 4-p axial 15m	M12 axial F	free wires	4	15	Yes	95ACC2070
CV-A1-22-B-25	CV Cable 4-p axial 25m	M12 axial F	free wires	4	25	Yes	95ACC2090
CV-A1-26-B-03	CV Cable 8-p axial 3m	M12 axial F	free wires	8	3	Yes	95ACC1510
CV-A1-26-B-05	CV Cable 8-p axial 5m	M12 axial F	free wires	8	5	Yes	95ACC1520
CV-A1-26-B-10	CV Cable 8-p axial 10m	M12 axial F	free wires	8	10	Yes	95ACC1530
CV-A1-26-B-15	CV Cable 8-p axial 15m	M12 axial F	free wires	8	15	Yes	95ACC2080
CV-A1-26-B-25	CV Cable 8-p axial 25m	M12 axial F	free wires	8	25	Yes	95ACC2100
CV-A2-22-B-03	CV Cable 4-p radial 3m	M12 radial F	free wires	4	3	Yes	95ACC1540
CV-A2-22-B-05	CV Cable 4-p radial 5m	M12 radial F	free wires	4	5	Yes	95ACC1550
CV-A2-22-B-10	CV Cable 4-p radial 10m	M12 radial F	free wires	4	10	Yes	95ACC1560
CV-A2-26-B-03	CV Cable 8-p radial 3m	M12 radial F	free wires	8	3	Yes	95ACC1600
CV-A2-26-B-05	CV Cable 8-p radial 5m	M12 radial F	free wires	8	5	Yes	95ACC1610
CV-A2-26-B-10	CV Cable 8-p radial 10m	M12 radial F	free wires	8	10	Yes	95ACC1620
CASCADING CABLES							
CS-F1-80-B-0005SG	SG EXTENDED Cascade cable 0.05m	custom	custom	N/A	0,05	No	95A252860
CS-F1-80-B-005	SG EXTENDED Cascade cable 0.5m	custom	custom	N/A	0,5	No	95A252850
CS-F1-80-B-01	SG EXTENDED Cascade cable 1m	custom	custom	N/A	1	No	95A252840
CS-H1-03-B-001	SLIM Cascade cable 0.1m	custom	M12 axial F	5	0,1	No	95A252950
CS-H1-03-B-005	SLIM Cascade cable 0.5m	custom	M12 axial F	5	0,5	No	95ASE2550
CS-H1-03-B-01	SLIM Cascade cable 1m	custom	M12 axial F	5	1	No	95ASE2560
SLS-CABLE-R-5	LASER SENTINEL Cable to Remote 5m	M12 axial M	M12 axial M	8	5	No	95ASE2890
SLS-CABLE-R-10	LASER SENTINEL Cable to Remote 10m	M12 axial M	M12 axial M	8	10	No	95ASE2900
SLS-CABLE-R-20	LASER SENTINEL Cable to Remote 20m	M12 axial M	M12 axial M	8	20	No	95ASE2910
SG EXTENDED PIGTAIL CABLES							
CS-G1-50-B-002	SG EXTENDED TX 0,2m	custom	M12 axial M	5	0,2	No	95A252820
CS-G1-70-B-002	SG EXTENDED BLANK RX 0.2m	custom	M12 axial M	12	0,2	No	95A252830
CS-R1-75-B-002	SG EXTENDED MUTING RX 0.2	custom	2x M12 axial M	5 + 12	0,2	No	95A252810
MUTING SYSTEMS CABLES							
CV-L1-02-B-007	M12 4-pole L Muting cable	M12 axial F	M12 radial F	4	0,7	No	95ACC2570
CV-Y1-02-B-007	M12 4-pole T Muting cable	M12 axial F	2x M12 radial F	4	0,7	No	95ACC2560
CS-M1-02-B-004	Cable 4 poles, unshielded, black, M8 F straight, M12 M straight, 400mm	M8 axial F	M12 axial M	4	0,4	No	95ASE2470
CS-M1-02-B-007	Cable 4 poles, unshielded, black, M8 F straight, M12 M straight, 700mm	M8 axial F	M12 axial M	4	0,7	No	95ASE2480
CS-M1-02-B-02	Cable 4 poles, unshielded, black, M8 F straight, M12 M straight, 2000mm	M8 axial F	M12 axial M	4	2	No	95ASE2490

The company endeavours to continuously improve and renew its products; for this reason the technical data and contents of this catalogue may undergo variations without prior notice. For correct installation and use, the company can guarantee only the data indicated in the instruction manual supplied with the products.

Rev. 07, 05/2020

APPENDIX

DATALOGIC
EMPOWER YOUR VISION

APPENDIX

Safety standards reference list

1. GENERAL PRINCIPLES

EN ISO 12100: 2010 Safety of machinery – General principles for design – Risk assessment and risk reduction.

2. SAFETY SYSTEMS DESIGN AND VALIDATION

EN ISO 13849-1: 2008 Safety of machinery - Safety-related parts of control systems. Part 1: General principles for design

EN ISO 13849-2: 2012 Safety of machinery - Safety-related parts of control systems. Part 2: Validation.

EN 62061/AC 2010 Safety of machinery. Functional safety of safety-related electrical/electronic/programmable electronic control systems.

3. ELECTROSENSITIVE PROTECTIVE EQUIPMENT

EN 61496-1/AC: 2010 Safety of machinery: electrosensitive protective equipment. Part 1: General prescriptions and tests.

IEC 61496-2: 2006 Safety of machinery: electrosensitive protective equipment - Part 2: Particular requirements for equipment using active optoelectronic protective devices.

IEC 61496-3:2008 Safety of machinery: electrosensitive protective equipment - Part 3: Particular requirements for Active Optoelectronic Protective Devices responsive to Diffuse Reflection (AOPDDR).

4. SAFETY DISTANCES

EN ISO 13855: 2010 Safety of machinery – Positioning of safeguards with respect to the approach speeds of parts of the human body.

Definitions

1. AOPD: ACTIVE OPTOELECTRONIC PROTECTIVE DEVICE

Device whose sensing function is performed by opto-electronic emitting and receiving elements detecting the interruption of optical radiations generated, within the device, by an opaque object present in the specified detection zone (or for a light beam device, on the axis of the light beam).

2. AOPDR: ACTIVE OPTO-ELECTRONIC PROTECTIVE DEVICE RESPONSIVE TO DIFFUSE REFLECTION

A device, whose sensing function is performed by optoelectronic emitting and receiving elements. These detect the diffuse reflection of optical radiations generated within the device by an object located in a detection zone (specified in two dimensions).

3. EAA: EFFECTIVE APERTURE ANGLE

Maximum angle of deviation from the optical alignment of the emitting element(s) and the receiving element(s) within which the AOPD continues in normal operation.

4. EDM: EXTERNAL DEVICE MONITORING

Means by which the electro-sensitive protective equipment (ESPE) monitors the state of control devices which are external to the ESPE.

5. ESPE: ELECTRO-SENSITIVE PROTECTIVE EQUIPMENT

Assembly of devices and/or components working together for protective tripping or presence sensing purposes and comprising as a minimum
– a sensing device;
– controlling/monitoring devices;
– output signal switching devices and/or a safety-related data interface.

6. LIGHT CURTAIN

AOPD comprising an integrated assembly of one or more emitting element(s) and one or more receiving element(s) forming a detection zone with a detection capability specified by the supplier. A light curtain with a large detection capability is sometimes referred to as a light grid.

7. OSSD: OUTPUT SIGNAL SWITCHING DEVICE

Component of the electro-sensitive protective equipment (ESPE) connected to the machine control system which, when the sensing device is actuated during normal operation, responds by going to the OFF-state.

8. PL: PERFORMANCE LEVEL

Discrete level used to specify the ability of safety-related parts of control systems to perform a safety function under foreseeable conditions.

9. RESPONSE TIME

Discrete level used to specify the ability of safety-related parts of control systems to perform a safety function under foreseeable conditions.

Safety distance calculation

- Properly install the light curtains in accordance with the user manual and applicable local safety regulations (OSHA, ANSI, European standards as EN ISO 13855 “Safety of Machinery - Positioning of safeguards with respect to the approach speeds of parts of the human body”).
- Consult DLIA Technical support before installing light curtains if you have questions, need information or assistance about the products.

Failure to comply with these instructions could result serious injury

The positioning of light curtains and light grids must comply with the international standard EN ISO13855, that provides a methodology to determine the minimum distance to a hazard zone from the detection zone, based on values for approach speeds of parts of the human body.

If a type-C standard exists for the machine, the distance specified should be used. If there is no type-C standard, the equations in EN ISO 13855 can be used to calculate it.

The factors to be taken in account are:

T1	Response time of the light curtain
T2	Machine stopping time
d	Resolution of the light curtain
K	Speed of the body or parts of the body (parameter given by the standard)

1. Vertical installation

1.1 EQUATION FOR THE CALCULATION OF THE MINIMUM DISTANCE

The detection zone is hortogonal to the direction of approach to the hazard zone

Fig. 3 – Minimum installation distance (vertical)

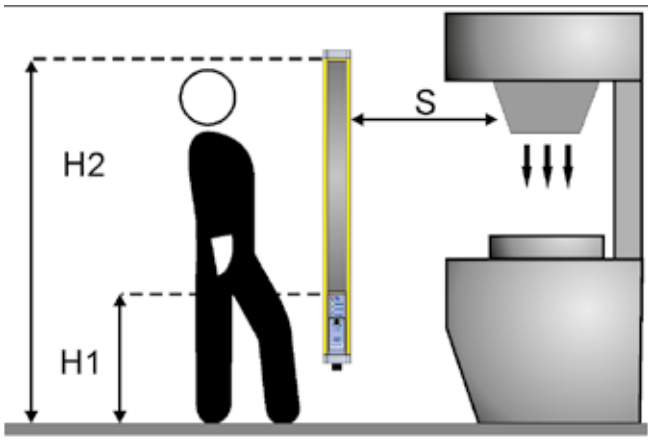

For light curtains with detection capability d <= 40 mm, the equation used to calculate the minimum distance S from a vertical detection zone hortogonal to the direction of approach to the hazard zone is:

$$S = K (T1 + T2) + C$$

Where C is an additional intrusion distance:

C = 8 (d -14) mm if resolution ≤ 40 mm
C = 850 mm if resolution > 40 mm

The equation must be first calculated using K = 2000 mm/s.
If the result S > 500 mm, it can be recalculated with K = 1600 mm/s.

The result S must in any case be:

S >= 100 mm if K = 2000 mm/s is used;
S >= 500 mm if K = 1600 mm/s is used

For light curtains with detection capability d >40mm and multiple separate beams (body detection) the following values can be used:

C = 850 mm
K = 1600 mm/s

1.2 POSITIONS OF THE BEAMS ABOVE REFERENCE PLANE

When the safeguard is used only for the detection of whole body access:
a) the height of the lowest beam shall be ≤ 300 mm to prevent access under the detection zone
b) the height of the uppermost beam shall be ≥ 900 mm to prevent stepping over the detection zone.

EN13855 states that the heights for 2, 3 and 4 beams given in the following table have been found to be the best compromise between an adequate risk reduction and the most practical in application.
Further protective measures to prevent access to the hazard zone can be required. For the lowest beam 400 mm can only be used when the risk assessment allows it.

NUMBERS OF BEAMS	HEIGHTS ABOVE REFERENCE PLANE (MM)
4	300, 600, 900, 1200
3	300, 700, 1100
2	400, 900

1.3 CIRCUMVENTING OF ESPE BY REACHING OVER THE DETECTION ZONE

If access to the hazard zone by reaching over the detection zone of vertically mounted electro-sensitive protective equipment cannot be excluded, an additional distance must be applied, depending on the height of the hazard zone and the height of upper edge of the ESPE detection zone. For reference, apply EN ISO 13855 Par. 6.5.

2. Horizontal installation

2.1 EQUATION FOR THE CALCULATION OF THE MINIMUM DISTANCE

The detection zone is parallel to the direction of approach to the hazard zone

If the safety light curtain must be mounted in a horizontal position (Fig. 4), the distance between the dangerous area and the most distant optical beam must be equal to the value calculated using the following equation:

$$S = 1600 \text{ mm/s } (T1 + T2) + (1200 \text{ mm} - 0.4\ H)$$

where:

T1 = Response time of the ESPE in seconds
T2 = Machine stopping time in seconds.
H = Beam height from ground

H shall not be greater than 1000 mm, and however for values greater than 300 mm the risk of an undetected access beneath the detection zone shall be taken in account during the risk assessment.

Furthermore, the lowest allowable height of the detection zone must satisfy this equation:

$$Hmin = 15\ (d - 50)$$

Fig. 4 – Minimum installation distance (horizontal)

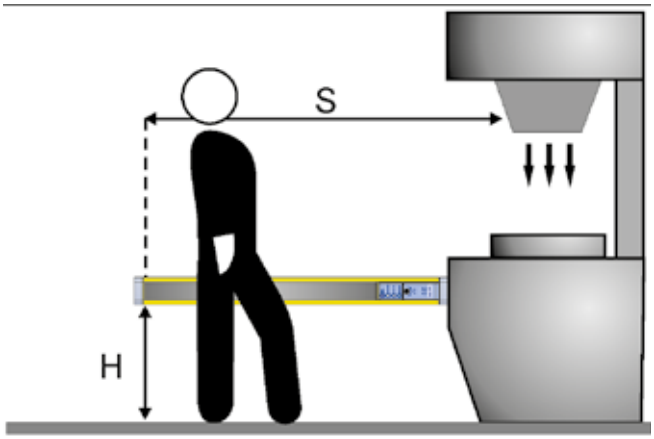

AOPD: Active Optoelectronic Protective Device	123
Automatic restart	10
Blanking	13
CAB-ETH-Mxx	118
Cascading	9
CS -A1-10-U-xx	53,59,119
CS-A1-02-U-xx	23,27,119
CS-A1-03-U-xx	59,119
CS-A1-06-U-xx	23,53,119
CS-A1-10-U-xx	TBD
CS-A1-15-U-xx	TBD
CS-F1-80-B-xxxx	59,119
CS-G1-50-B-002	56,59,119
CS-G1-xx-B-002	59
CS-H1-03-B-xxx	33,119
CS-M1-02-B-xxx	104,107,119
CS-ME	32,110,111
CS-R1-75-B-002	59,119
CV-A1-22-B-xx	38,119
CV-A1-26-B-xx	38,119
CV-L1-02-B-007	99,101,119
CV-Y1-02-B-007	99,100,101,119
DataVS-MK-01	69
Detection capability	8
Detection zone	8
EAA: Effective Aperture Angle	7,123
EDM	10
ESPE: Electro-sensitive protective equipment	123
External device monitoring	10
GUI (Graphical User Interface)	13
LASER SENTINE	72
LMS	108
Manual restart	10
MICRO-18	69
Muting	11
openSAFETY	60
OSSD: Output Signal Switching Device	123
Override	12
PERFORMANCE LEVEL	7
PL (Performance level)	7
POWERLINK	60
R6	103
Resolution	8
Response time	10,123
Retroreflective light curtain	9
S100-PR-x-PK	103,104,107
S5	66
S8-PR-x-PK	101,102,105
Safety Laser Scanner	72
SE-S	91
SE-SR2	110
SG BODY BIG BASE	40
SG BODY BIG MUTING	40
SG BODY COMPACT BASE	32
SG BODY COMPACT MUTING	32
SG BODY REFLECTOR BASE	46
SG BODY REFLECTOR MUTING	46
SG2 BASE	18
SG2 EXTENDED	18
SG2 MUTING	54
SG2-30-xxx-00-W (SG2 MUTING)	55
SG2-xx-xxx-00-E-C (SG2 EXTENDED)	19
SG2-xx-xxx-00-X (SG2 BASE)	19
SG4 BASE	18
SG4 EXTENDED	54
SG4 FIELDBUS	60
SG4 LONG RANGE BASE	40
SG4-40-xxx-00-E (SG4 LONG RANGE BASE)	41
SG4-DONGLE	117
SG4-H 24	24
SG4-H14-xxx-X-x (SG4-H)	25
SG4-RBxL/T-xxx-00-W (SG BODY REFLECTOR MUTING active side)	47
SG4-RBx-xxx-00-E (SG BODY REFLECTOR BASE active side)	47
SG4-RBx-xxx-00-W (SG BODY REFLECTOR MUTING active side)	47
SG4-RDBx (SG BODY REFLECTOR BASE passive side)	47
SG4-RDBx (SG BODY REFLECTOR MUTING passive side)	47
SG4-RDBxL/T (SG BODY REFLECTOR MUTING passive side)	47
SG4-xx-xxx-00-E (SG4 BASE)	19
SG4-xx-xxx-00-P (SG4 EXTENDED)	55
SG4-xx-xxx-0P-A (SG4 FIELDBUS ADVANCED)	64
SG4-xx-xxx-0P-B (SG4 FIELDBUS BASIC)	61, 64
SG-AS-ARM	98, 99, 101
SG-BWS-T4	67
SG-BWS-T4-MT	67
SG-CB-B	99, 101
SG-CB-C	99, 101
SG-DM	92
SG-F1-G1-ARMS	96
SG-F2-G2-ARMS	96
SG-IP69K	114
SG-L-ARMS	96
SG-LP	57
SG-LS	116
SG-M	102
SG-M BRACKET	107
SG-M-ARM	107
SG-M-CB	106
SG-M-CB-KIT	106
SG-Mx-S100 -200-x (SG-M)	104
SG-Mx-S100 -x (SG-M)	104
SG-Mx-S8 -200-x (SG-M)	104
SG-Mx-S8 -x (SG-M)	104
SG-P	91
SG-PR-ARM	99
SG-PSB	95
SG-PSM	93
SG-SRT1	110
SG-SRT2	112
SG-T-ARMS	98
SGx-Bx-xxx-00-E (SG BODY BIG BASE)	41
SGx-Bxxx-xxx-00-W-C (SG BODY BIG MUTING)	41
SGx-S/L/Tx-xxx-PP-W (SG BODY COMPACT MUTING)	35
SGx-Sx-xxx-PP-E (SG BODY COMPACT BASE)	35
SIL: Safety Integrity Level	123
SINGLE BEAM SENSORS	66
SL5	68
SLIM	28
SLS-BRACKET-x	76
SLS-CLEANER	76
SLS-CLOTH	76
SLS-Mx-(E-)xxxx-E	TBD
SLS-Rx-E	TBD
SLS-Sax	TBD
SLx-xxxx-00-E (SLIM)	29
SP-40	69
ST-5099	69
ST-5100	69
ST-DM	94
ST-K4REAR-SG BODY BIG	85
ST-K4ROT	87
ST-K4ROT-OP	88
ST-K4ROT-SG BODY BIG	86
ST-K4ROT-SG BODY COMPACT	87
ST-KCASCADE-SG EXTENDED	85
ST-KPxMP	84
ST-KSTD	80
ST-KxAV	81
ST-KxOR	81
ST-PS-DM	96
ST-PSx-SG BODY	97
ST-PSx-SG-SE	97
SU-LMS-1A	108
SU-LMS-1B	108
SWING-18	69
TPxx	118
Type	7

DATALOGIC
EMPOWER YOUR VISION

Rev. 10, 03/2020
9C514200E

Product and Company names and logos referenced may be either trademarks or registered trademarks of their respective companies. We reserve the right to make modifications and improvements.

www.datalogic.com