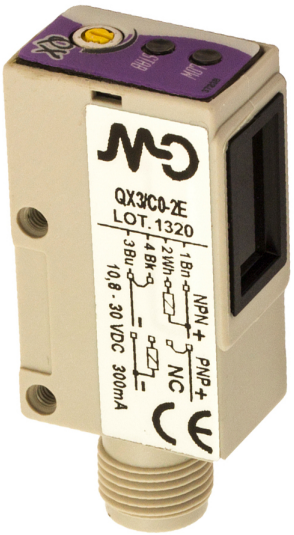


# QX

## QXP/C0-2E

**Photo.Mini,NPN+PNP-NC,M12 plug,Reflex**

**DC MINIATURIZED CUBIC PHOTOELECTRIC SENSORS**

# OVERVIEW

- Axial and right angle optics
- 2 LEDs (threshold and signal margin)
- Visible red light in retro-reflective, polarized and through-beam models
- Long distances capability
- Precision beam
- Fast response time (0,75-0,5 ms)
- NPN-PNP selectable output
- High output current (>300 mA)

# TECHNICAL FEATURES

Detection properties

| | |
|---|---|
| Nominal sensing distance | 3m |
| Repeat Accuracy | ≤ 5% |
| Sensitivity adjustment | Trimmer |

Application

| | |
|---|---|
| Function Principle | Polarized |

| | |
|---|---|
| Optic position | Radial 90° |

Outputs

| | |
|---|---|
| Output type | NPN/PNP Selectable NC |
| Output Function | NC |
| Switching frequency | 750Hz |
| Response time | 666µs |

Electrical data

| | |
|---|---|
| Operating Voltage | 10…30VDC |
| No-Load supply current | ≤ 20mA |
| Load current | ≤300mA |
| Leakage current | ≤ 100µA @ 30Vdc |
| Output voltage drop | ≤1,2V@Iload=100mA |
| Max ripple content | ≤10% |
| LED indicators | Red(output status) , Geen (stability) |
| Time delay before availability | ≤200ms |
| Short-circuit protection | Yes |
| Reverse Polarity Protection | Yes |
| Emission | LED Red (660nm) |

| | |
|---|---|
| Interference to external light | 3000lux Incandescent Lamp, 10000lux |

Mechanical data

| | |
|---|---|
| Dimensions | 15x23x74 |
| Material | ABS |
| Housing material | |
| Weight | 70g |
| Connections | M12 plug |
| Active Head Material | Acrylic |
| Operating temperature | - 25°C…+ 70°C ( without freeze) |
| Diameter/Dimension | Cubic |

Test/Approvals

| | |
|---|---|
| Approvals | CE |
| EMC compatibility | EN 60947-5-2 |
| Shocks and vibrations | Vibration IEC 60068-2-6 / Shock IEC 60068-2-28 |
| Degree of protection | IP65 |

Accessories

| | |
|---|---|
| Supplied Accessories | ST70 mounting brakets and screws |

Generical Data

| | |
|---|---|
| Dimensions | 15x23x40 |
| Operating Temperature | - 15°C...+ 55°C (Without freeze) |
| Mechanical Protection | IP65 |

# CONNECTIONS

Eletrical diagram

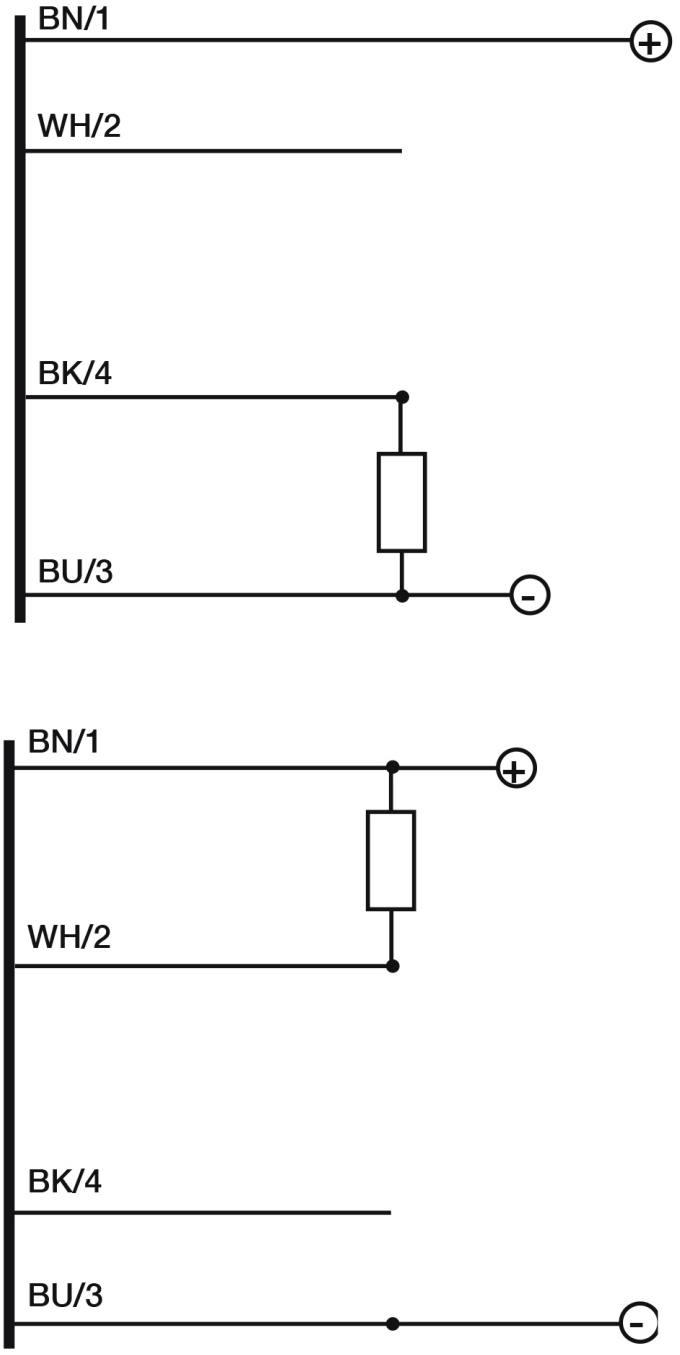


Connector

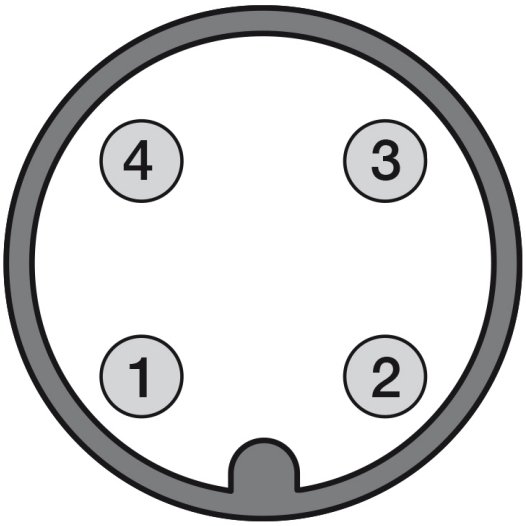


# OTHERS

Dimensions

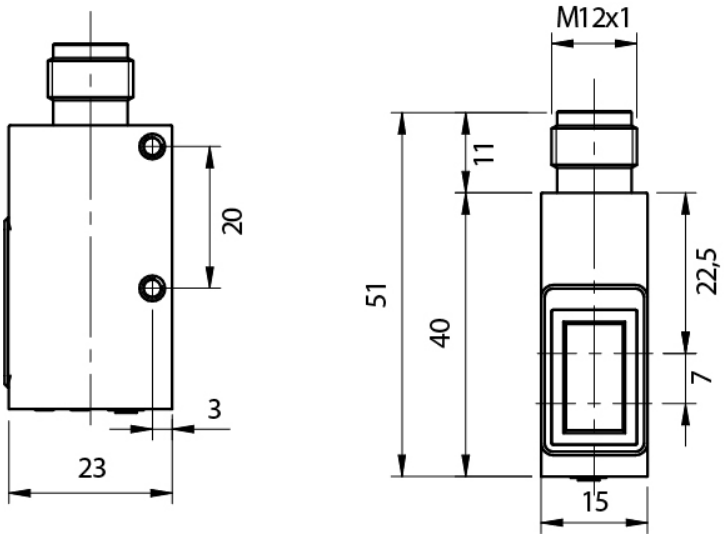


Response curves

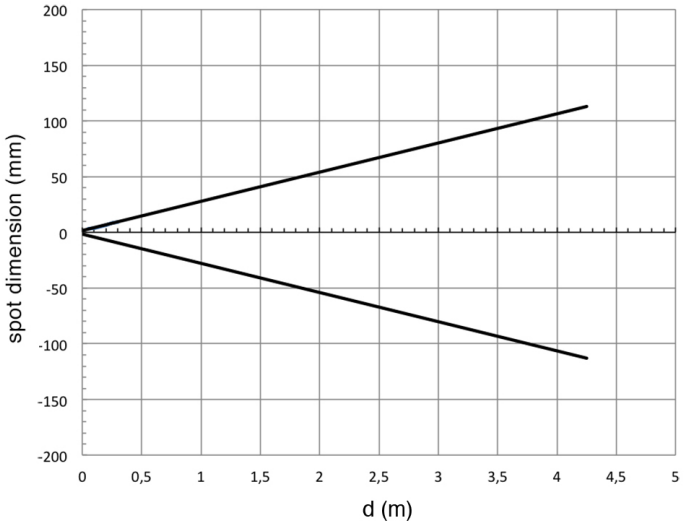


**Datasensing S.r.l.**
Strada S.Caterina, 235
41122 Modena (MO)
Tel. 059 420411
Fax 059 253973
E-mail
info@datasensing.com

**date of printing**
25/10/2026
03:50:33