QX

QXC/C0-1E

Photo.Mini,NPN+PNP-NC,M12 plug,Reflex

DC MINIATURIZED CUBIC PHOTOELECTRIC SENSORS

OVERVIEW

- Axial and right angle optics
- 2 LEDs (threshold and signal margin)
- Visible red light in retro-reflective, polarized and through-beam models
- Long distances capability
- Precision beam
- Fast response time (0,75-0,5 ms)
- NPN-PNP selectable output
- High output current (>300 mA)

TECHNICAL FEATURES

Detection properties

Nominal sensing distance	5m
Repeat Accuracy	≤ 5%
Sensitivity adjustment	Trimmer

Application

Function Principle	Retro-reflector

Optic position	Axial

Outputs

Output type	NPN/PNP Selectable NC
Output Function	NC
Switching frequency	750Hz
Response time	666µs

Electrical data

Operating Voltage	10…30VDC
No-Load supply current	≤ 20mA
Load current	≤300mA
Leakage current	≤ 100µA @ 30Vdc
Output voltage drop	≤1,2V@Iload=100mA
Max ripple content	≤10%
LED indicators	Red(output status) , Geen (stability)
Time delay before availability	≤200ms
Short-circuit protection	Yes
Reverse Polarity Protection	Yes
Emission	LED Infrared (880nm)

Interference to external light	3000lux Incandescent Lamp, 10000lux

Mechanical data

Dimensions	15x23x59
Material	ABS
Housing material	
Weight	70g
Connections	M12 plug
Active Head Material	Acrylic
Operating temperature	- 25°C…+ 70°C (without freeze)
Diameter/Dimension	Cubic

Test/Approvals

Approvals	CE
EMC compatibility	EN 60947-5-2
Shocks and vibrations	Vibration IEC 60068-2-6 / Shock IEC 60068-2-28
Degree of protection	IP65

Accessories

Supplied Accessories	ST70 mounting brakets and screws

Generical Data

Dimensions	15x23x40
Operating Temperature	- 25°C…+ 70°C (Without freeze)
Mechanical Protection	IP65

CONNECTIONS

Eletrical diagram

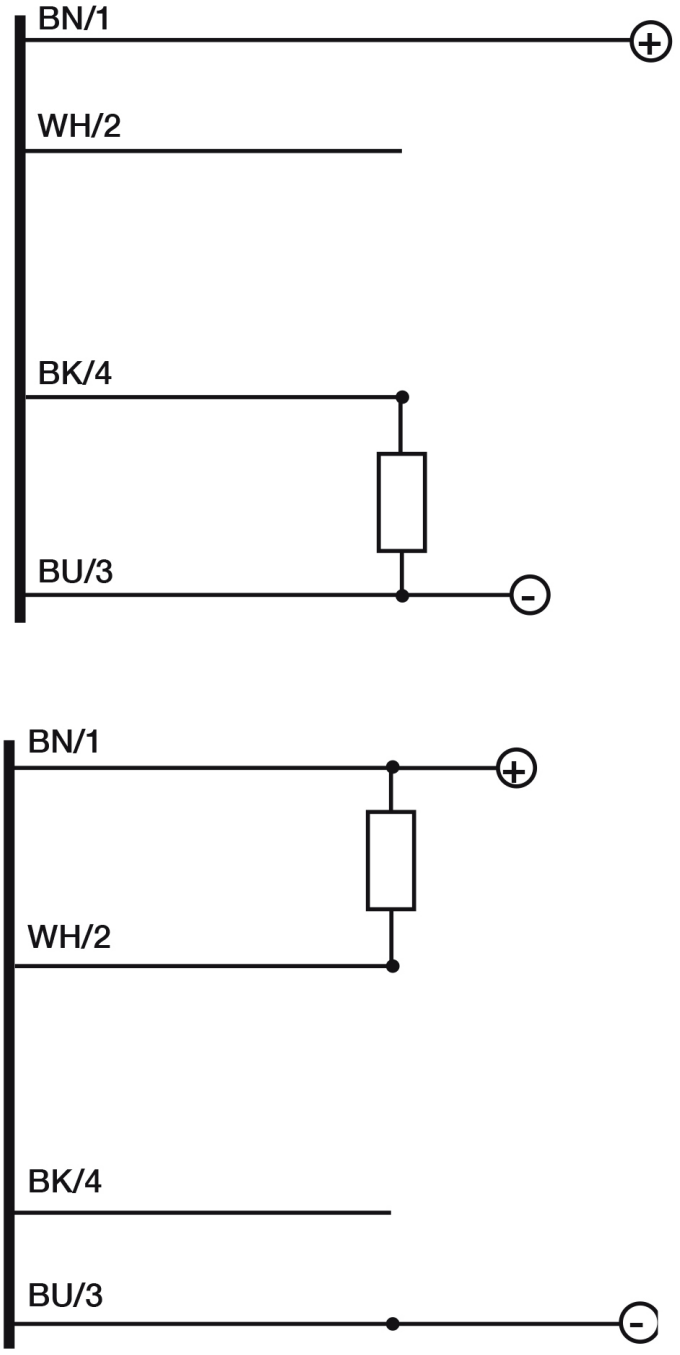

Connector

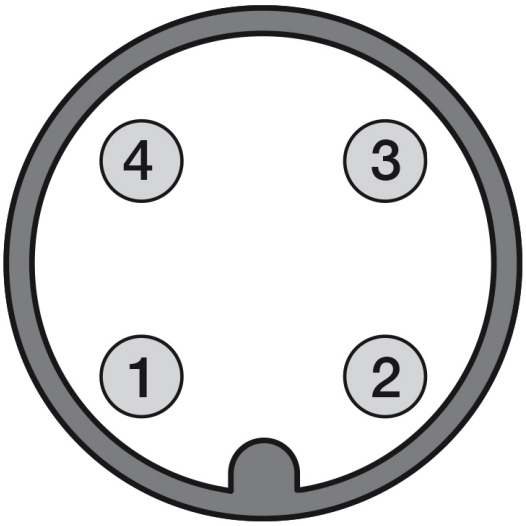

OTHERS

Dimensions

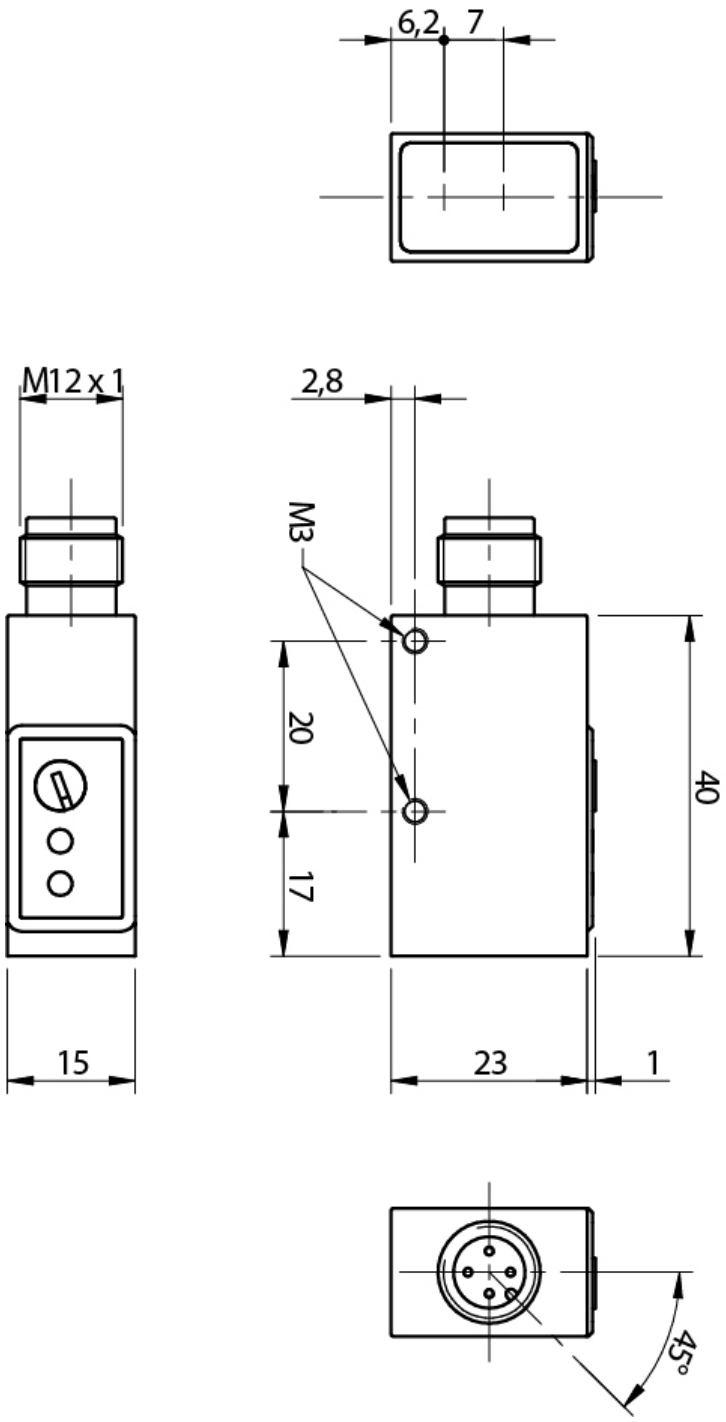

Response curves

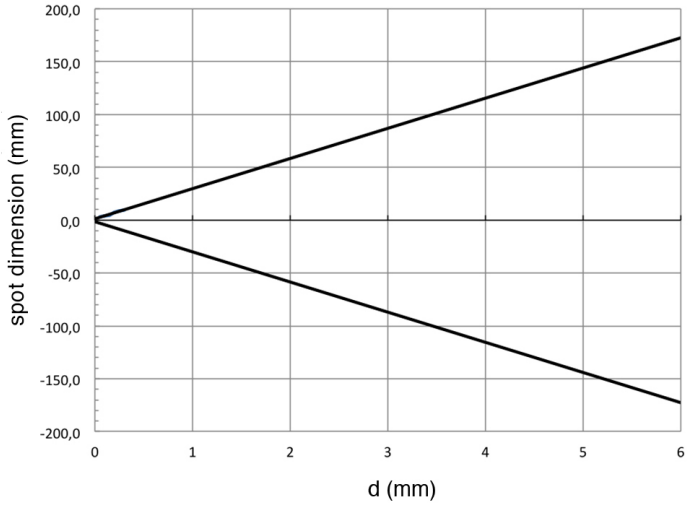

Datasensing S.r.l.
Strada S.Caterina, 235
41122 Modena (MO)
Tel. 059 420411
Fax 059 253973
E-mail
info@datasensing.com

date of printing
25/10/2026
03:50:25