PFM

PFM1/BP-1H

Ind.M12,PNP-NO+NC,M12 plug,Sch-STD

M12 CYLINDRICAL INDUCTIVE SENSORS FOR FOOD AND BEVERAGE APPLICATIONS

OVERVIEW

- AISI 316L (DIN 1.4404) stainless steel housing
- LED status indicator
- IP67 – IP68 – IP69K protection degree
- ATEX models, cat. 3, available on request
- Complete protection against electrical damages
- Standard and long distance models

TECHNICAL FEATURES

Detection properties

Nominal sensing distance	2mm
Operanting distance	0…1,62mm
Standard target	12x12mm FE360
Correction Factor	copper: 0,25 / aluminium: 0,30 / brass: 0,40 / stainless steel: 0,75
Thermal drift of Sr	< 10%

Repeat Accuracy	< 5% (UB 24V Ta=23°C ±5°C)
Hysteresis	1 … 20%

Application

Description	M12 standard flush mount
Functions	Proximity

Outputs

Output type	PNP
Output Function	NO + NC
Switching frequency	2kHz

Electrical data

Operating Voltage	10...30Vdc
No-Load supply current	≤ 15mA
Load current	≤ 200mA
Leakage current	≤ 15µA
Output voltage drop	≤ 2V @200mA
Max ripple content	≤ 10%
LED indicators	Yellow LED output state
Time delay before availability	≤ 50ms

Short-circuit protection	Yes
Reverse Polarity Protection	Yes
Impulsive Overvoltage Protection	Yes
Protection against inductive loads	Yes

Mechanical data

Dimensions	M12 x 1 / L = 64,6mm
Mounting	Shielded
Material	AISI316L Stainless Steel
Housing material	AISI316L Stainless Steel
Weight	30g
Connections	M12 Plug
Active Head Material	PPS
Tightening torque	25Nm
Operating temperature	-40°C…+80°C (up to 100°C for short exposure during cleaning process)
Diameter/Dimension	M12

Test/Approvals

Approvals	CE cULus ECOLAB DIVERSEY
EMC compatibility	IEC 60947-5-2
Shocks and vibrations	Vibration IEC 60068-2-6 / Shock IEC 60068-2-27

Degree of protection	IP68, IP69K

Accessories

Supplied Accessories	2 nuts M12x1

Generical Data

Dimensions	M12 x 1 / L = 64,6mm
Operating Temperature	-40°C…+80°C (up to 100°C for short exposure during cleaning process)
Mechanical Protection	IP67

CONNECTIONS

Eletrical diagram

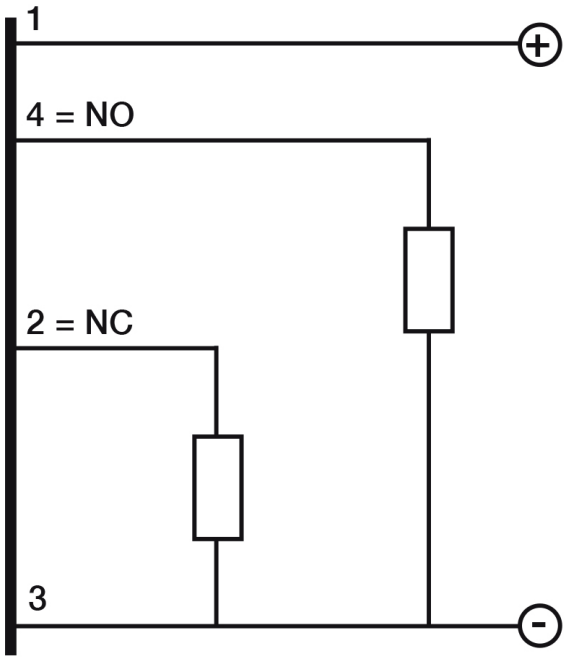

Connector

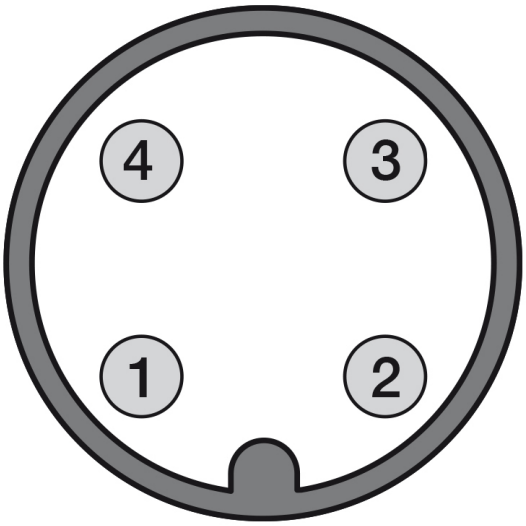

OTHERS

Dimensions

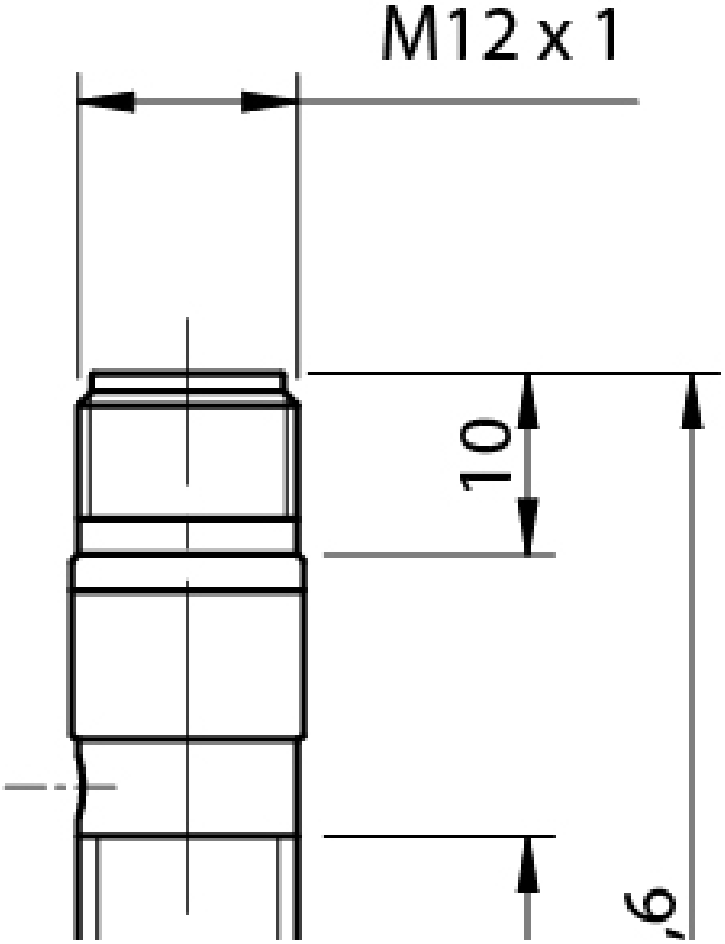

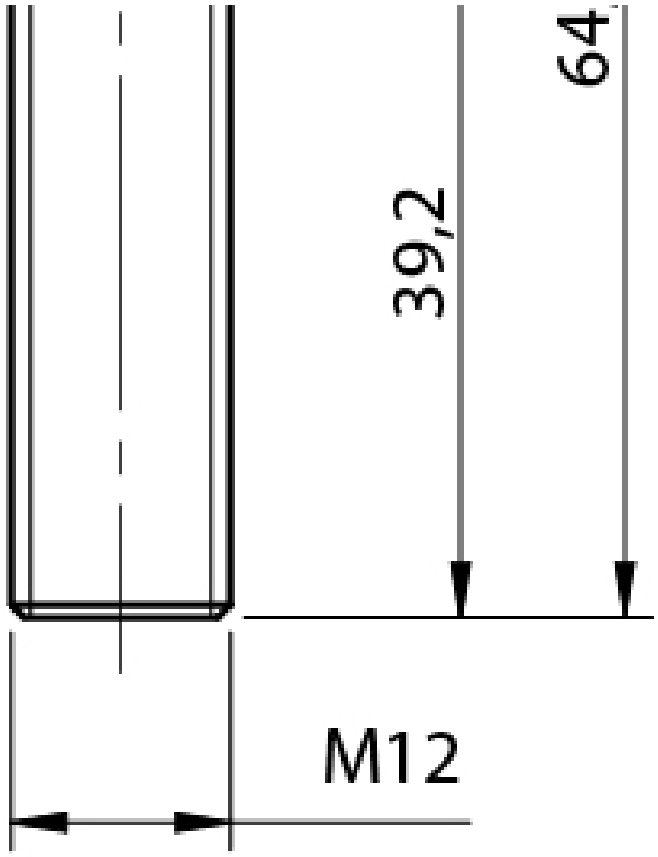

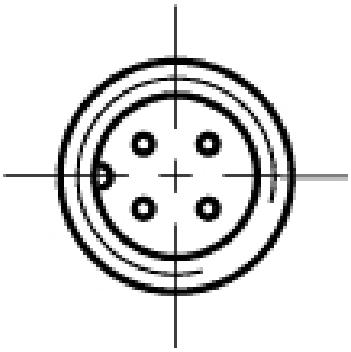

Response curves

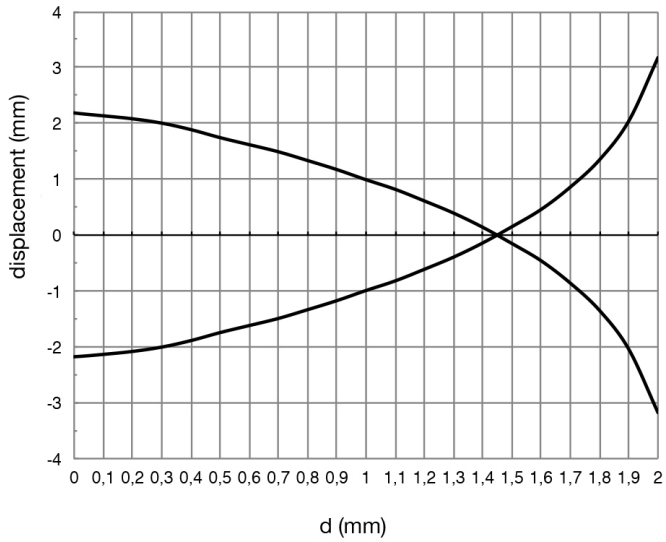

Installation

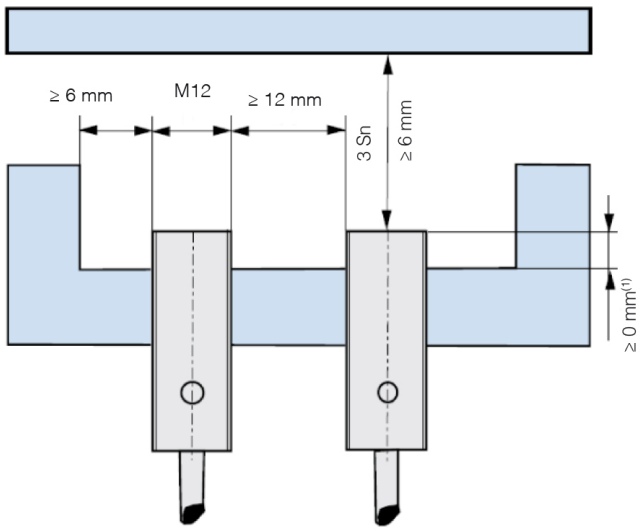

(1) ≥ 2 mm for non magnetic materials

Datasensing S.r.l.
Strada S.Caterina, 235
41122 Modena (MO)
Tel. 059 420411
Fax 059 253973
E-mail
info@datasensing.com

date of printing
25/10/2026
03:31:58