# FF + FFRS

## FFR3/BP-1E

**Photo.M18,PNP-NO+NC,M12 plug,Diffuse**

**M18 IP69K PHOTOELECTRIC SENSORS FOR HARSH ENVIRONMENTS**

# OVERVIEW

# TECHNICAL FEATURES

Detection properties

| | |
|---|---|
| Nominal sensing distance | 100mm |
| Thermal drift of Sr | 10% Sr |
| Repeat Accuracy | 5% |
| Sensitivity adjustment | Teach-in |

Application

| | |
|---|---|
| Function Principle | Diffuse reflection (short distance, ≤200mm) |
| Notes | white target Kodak 90% 100 x 100mm |

| | |
|---|---|
| Optic position | Axial |

Outputs

| | |
|---|---|
| Output type | PNP NO+NC |
| Output Function | NO+NC |
| Switching frequency | 500Hz |
| Response time | 1ms |

Electrical data

| | |
|---|---|
| Operating Voltage | 10…30VDC |
| No-Load supply current | ≤ 35mA |
| Load current | ≤100mA |
| Leakage current | ≤10μA |
| Output voltage drop | ≤2V@Iload=100mA |
| Max ripple content | ≤10% |
| LED indicators | Green Stability ; Yellow Output state , |
| Time delay before availability | ≤200ms |
| Short-circuit protection | Yes |
| Reverse Polarity Protection | Yes |
| Emission | LED Red (660nm) |

| | |
|---|---|
| Interference to external light | 5.000lux (incandescent lamp), 10.000lux (sunlight) |

Mechanical data

| | |
|---|---|
| Dimensions | M18x1/L=83mm |
| Housing material | Stainless steel AISI 316L / PA12 plug |
| Weight | 60g |
| Connections | M12 plug |
| Active Head Material | PA12 |
| Tightening torque | 50Nm |
| Operating temperature | -25°C…+80°C (without freeze) |
| Diameter/Dimension | M18 |

Test/Approvals

| | |
|---|---|
| Approvals | CE cULus ECOLAB Diversey |
| EMC compatibility | EN 60947-5-2 |
| Shocks and vibrations | Vibration IEC 60068-2-6 / Shock IEC 60068-2-27 |
| Degree of protection | IP68, IP69K |

Accessories

| | |
|---|---|
| Supplied Accessories | Nuts M18 x 1 |

Generical Data

| | |
|---|---|
| Dimensions | M18x1/L=83mm |

| | |
|---|---|
| Operating Temperature | - 25°C…+ 80°C (Without freeze) |
| Mechanical Protection | IP68, IP69K |

# CONNECTIONS

Eletrical diagram

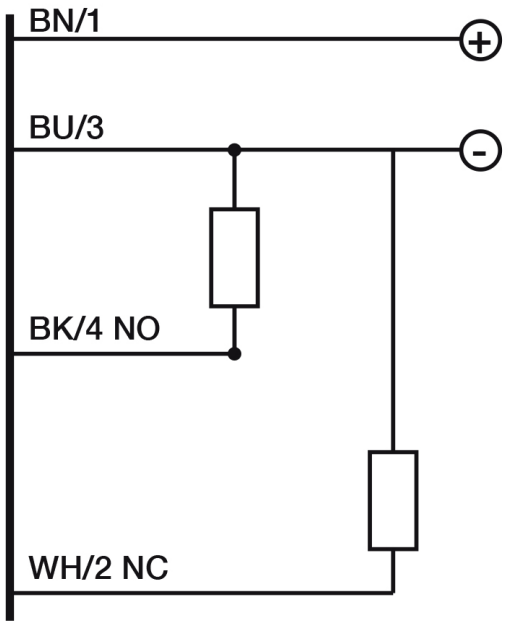


Connector

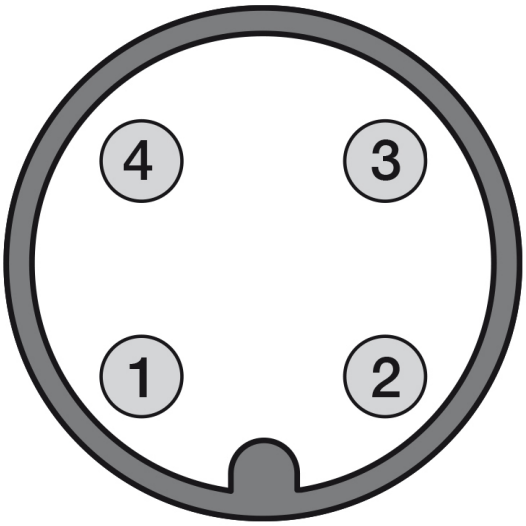


# OTHERS

Dimensions

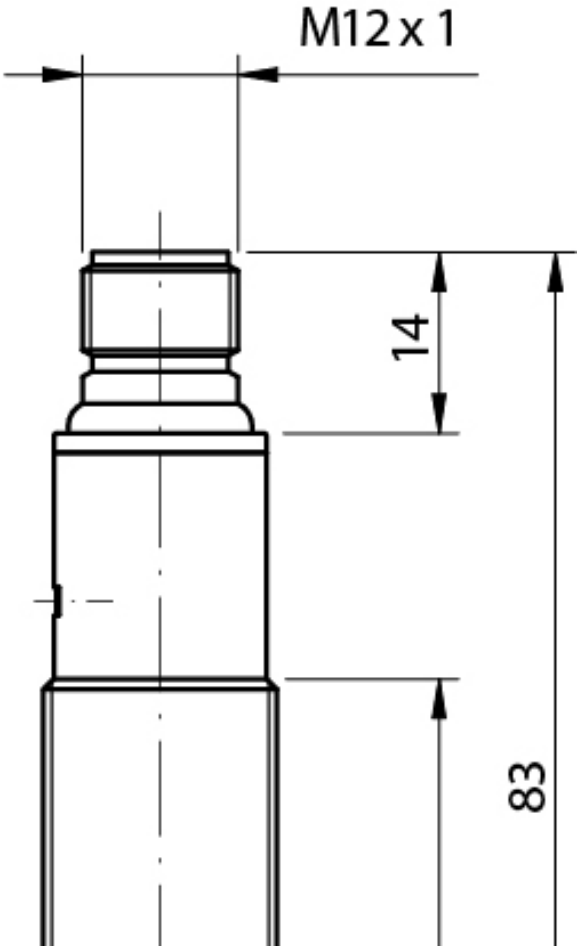

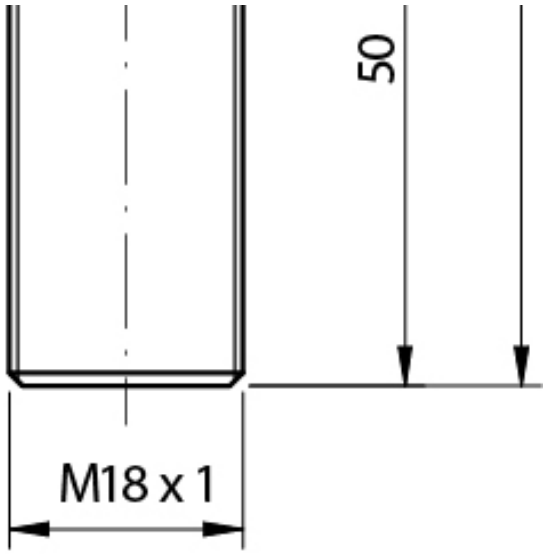


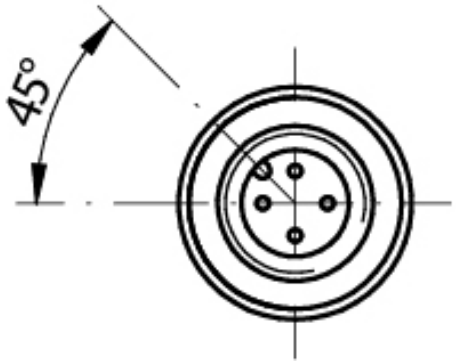


Response curves

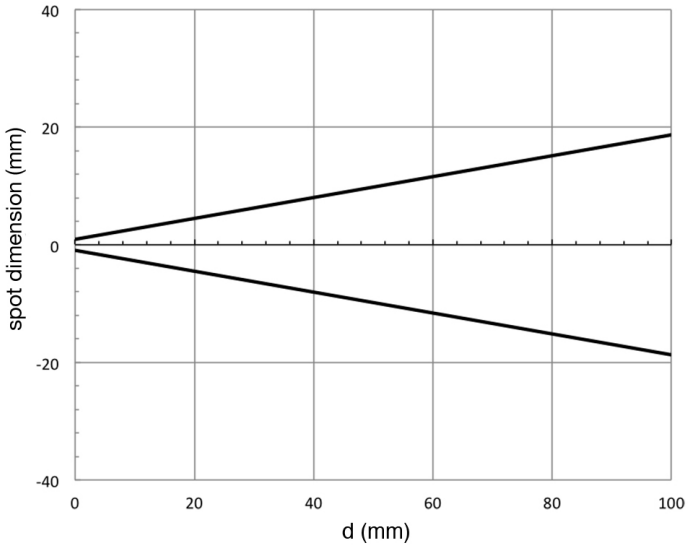


**Datasensing S.r.l.**
Strada S.Caterina, 235
41122 Modena (MO)
Tel. 059 420411
Fax 059 253973
E-mail
info@datasensing.com

**date of printing**
25/10/2026
03:34:45