FAL

FALS/BP-1E

Photo.M18,Laser emiss.,PNP-NO+NC,M12 plug,BGS

M18 PHOTOELECTRIC SENSORS DC LASER EMISSION

OVERVIEW

- Complete range of M18 sensors with 10...30 Vdc power supply
- Axial and radial optic with flat surface
- Visible red laser emission models
- IP67 protection degree
- Metallic or plastic housing
- Sensitivity adjustment available for all models
- Total protection against any type of electric damages
- Approvals: CE and cULus listed

TECHNICAL FEATURES

Detection properties

Nominal sensing distance	100mm
Thermal drift of Sr	≤10% Sr
Repeat Accuracy	10%
Sensitivity adjustment	Trimmer

Minimum sensing distance (blind zone)	30mm

Application

Function Principle	Blackground suppression
Notes	white target Kodak 90% 100 x 100mm
Optic position	Axial

Outputs

Output type	PNP NO+NC
Output Function	NO+NC
Switching frequency	1,5kHz
Response time	333µs

Electrical data

Operating Voltage	10…30VDC
No-Load supply current	≤ 30mA
Load current	≤100mA
Leakage current	≤10µA
Output voltage drop	≤2V@Iload=100mA
Max ripple content	≤10%
LED indicators	Yellow (Lon) or output status Lo/Do

Time delay before availability	≤200ms
Short-circuit protection	Short circuit (autoreset), Overvoltage
Reverse Polarity Protection	Polarity inversal, Inpulsive voltage
Emission	LASER Red (650nm) class1
Interference to external light	3000lux (incandescent lamp), 10000lux (sunlight)

Mechanical data

Dimensions	M18 x 1 /L =80mm
Housing material	Nickel plated brass / PA12 plug
Weight	60g
Connections	M12 plug
Active Head Material	PMMA / ABS
Tightening torque	25Nm
Operating temperature	-15°C...+ 55°C (Without freeze)
Diameter/Dimension	M18

Test/Approvals

Approvals	CE cULus
EMC compatibility	EN 60947-5-2
Shocks and vibrations	Vibration IEC 60068-2-6 / Shock IEC 60068-2-27
Degree of protection	IP67

Accessories	
Supplied Accessories	nuts M18 x 1, screwdriver
Generical Data	
Dimensions	M18 x 1 /L =80mm
Operating Temperature	- 15°C...+ 55°C (Without freeze)
Mechanical Protection	IP67

CONNECTIONS

Eletrical diagram

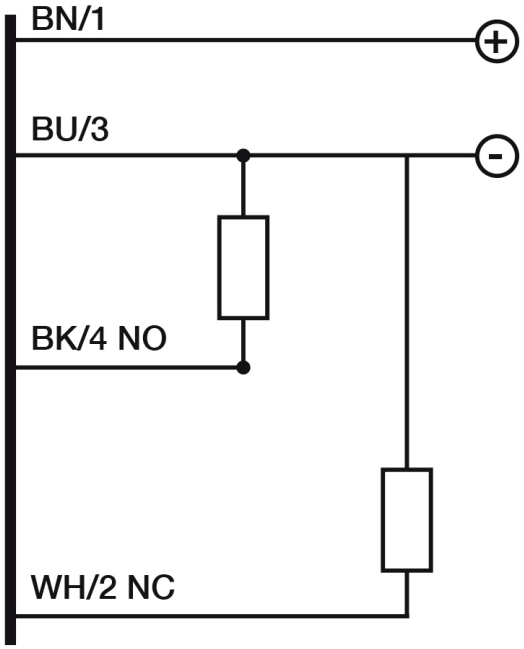

Connector

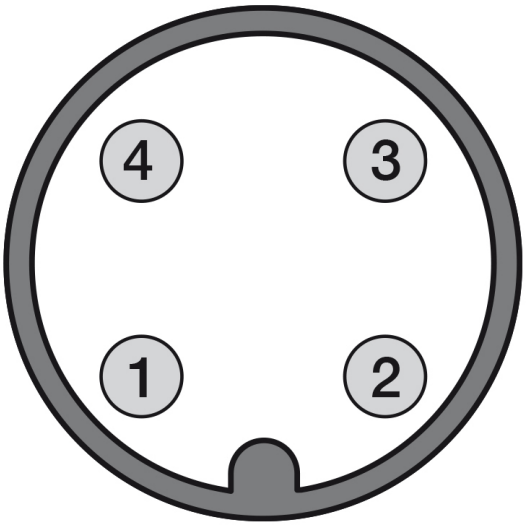

OTHERS

Dimensions

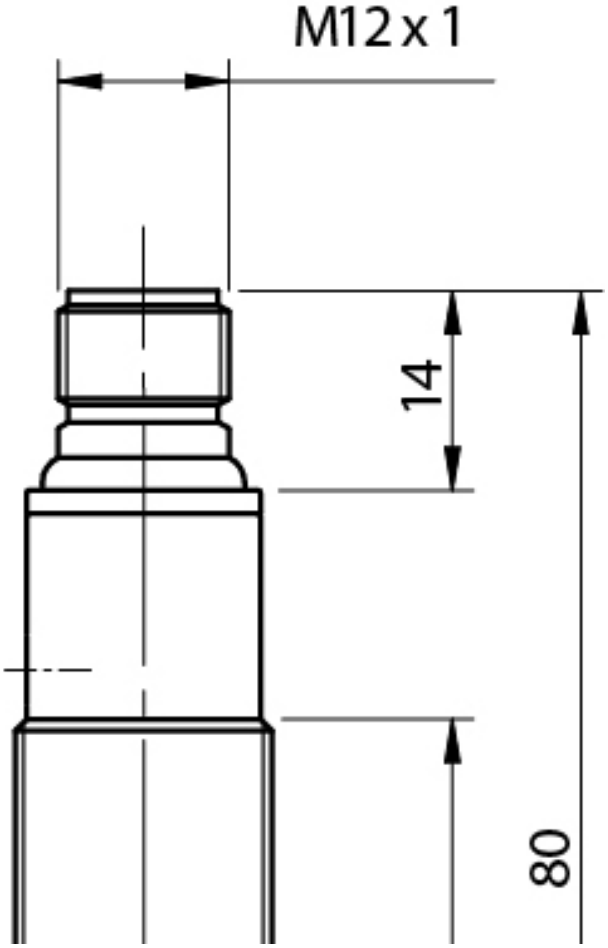

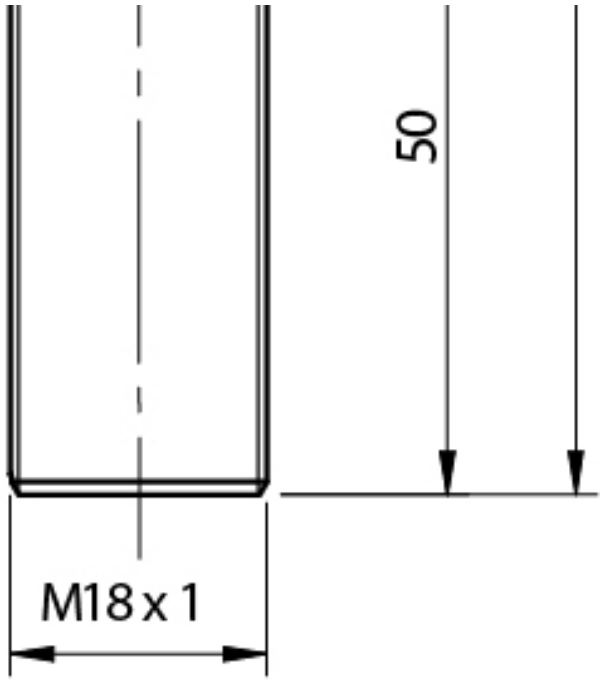

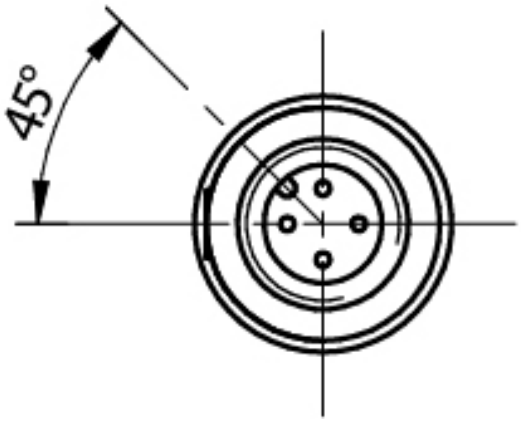

Response curves

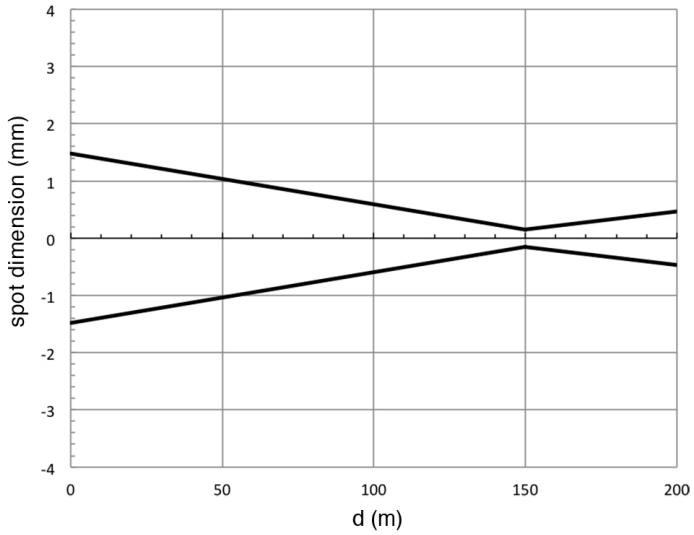

Datasensing S.r.l.
Strada S.Caterina, 235
41122 Modena (MO)
Tel. 059 420411
Fax 059 253973
E-mail
info@datasensing.com

date of printing
25/10/2026
03:38:11