# FAL

## FALN/BP-1E

**Photo.M18,Laser emiss.,PNP-NO+NC,M12 plug,Reflex**

**M18 PHOTOELECTRIC SENSORS DC LASER EMISSION**

# OVERVIEW

- Complete range of M18 sensors with 10...30 Vdc power supply
- Axial and radial optic with flat surface
- Visible red laser emission models
- IP67 protection degree
- Metallic or plastic housing
- Sensitivity adjustment available for all models
- Total protection against any type of electric damages
- Approvals: CE and cULus listed

# TECHNICAL FEATURES

Detection properties

| | |
|---|---|
| Nominal sensing distance | 20m |
| Thermal drift of Sr | ≤10% Sr |
| Repeat Accuracy | 5% |
| Sensitivity adjustment | Teach-in |

## Application

| | |
|---|---|
| Function Principle | Polarized |
| Notes | On RL110 reflector ; 30m on RL201 , 5m on RL100D |
| Optic position | Axial |

## Outputs

| | |
|---|---|
| Output type | PNP NO+NC |
| Output Function | NO+NC |
| Switching frequency | 800Hz |
| Response time | 625µs |

## Electrical data

| | |
|---|---|
| Operating Voltage | 10…30VDC |
| No-Load supply current | ≤ 30mA |
| Load current | ≤100mA |
| Leakage current | ≤10µA |
| Output voltage drop | ≤2V@Iload=100mA |
| Max ripple content | ≤10% |
| LED indicators | Green power supply/yellow (LightON EG≥2)/yellow flashing (LightON 1<EG<2) |
| Time delay before availability | ≤200ms |
| Short-circuit protection | Short circuit (autoreset), Overvoltage |

| | |
|---|---|
| Reverse Polarity Protection | Polarity inversal, Inpulsive voltage |
| Emission | LASER Red (650nm) class1 |
| Interference to external light | 3000lux (incandescent lamp), 10000lux (sunlight) |

Mechanical data

| | |
|---|---|
| Dimensions | M18 x 1 /L =80 mm |
| Housing material | Nickel plated brass / PC plug |
| Weight | 70g |
| Connections | M12 plug |
| Active Head Material | Glass / PC |
| Tightening torque | 25Nm |
| Operating temperature | - 15°C…+ 55° C (Without freeze) |
| Diameter/Dimension | M18 |

Test/Approvals

| | |
|---|---|
| Approvals | CE cULus |
| EMC compatibility | EN 60947-5-2 |
| Shocks and vibrations | Vibration IEC 60068-2-6 / Shock IEC 60068-2-27 |
| Degree of protection | IP67 |

Accessories

| | |
|---|---|
| Supplied Accessories | nuts M18 x 1, screwdriver |

Generical Data

| | |
|---|---|
| Dimensions | M18 x 1 /L =80 mm |
| Operating Temperature | - 15°C...+ 55°C (Without freeze) |
| Mechanical Protection | IP67 |

# CONNECTIONS

Eletrical diagram

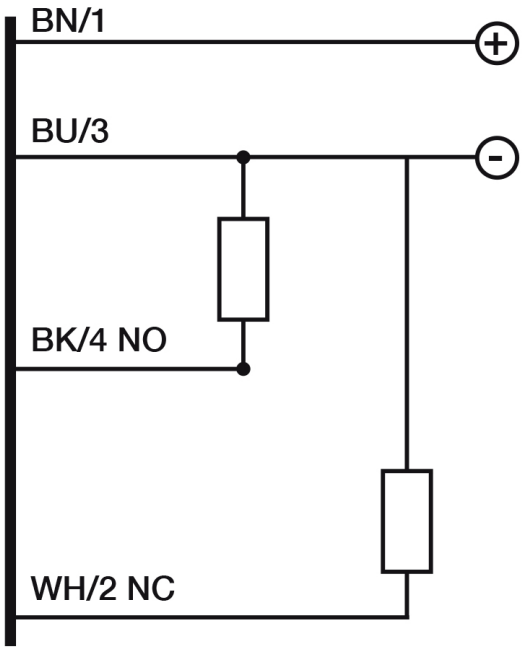


Connector

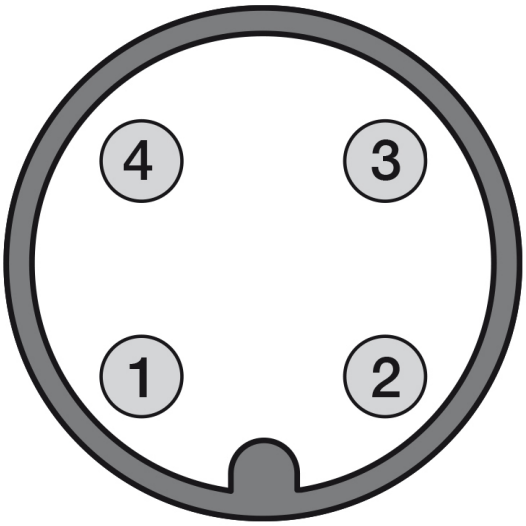


# OTHERS

Dimensions

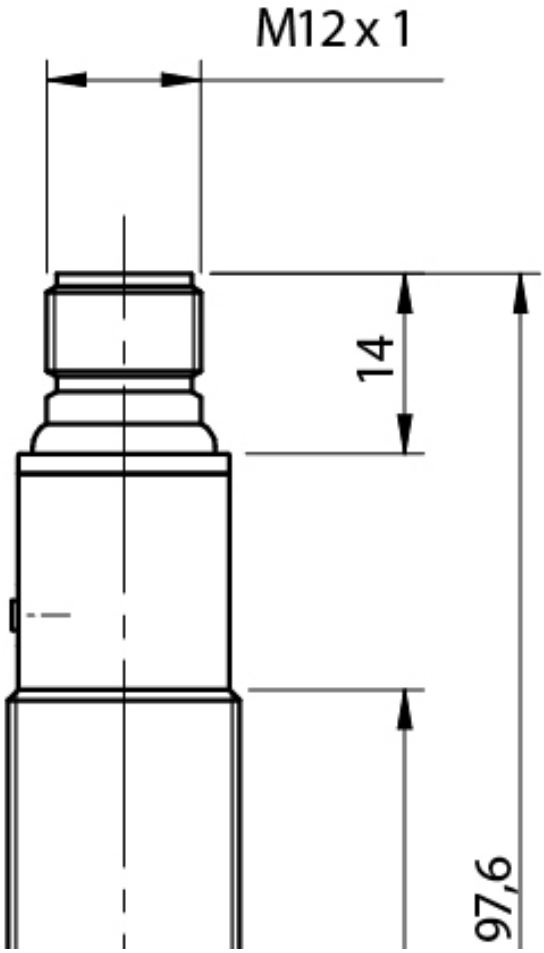

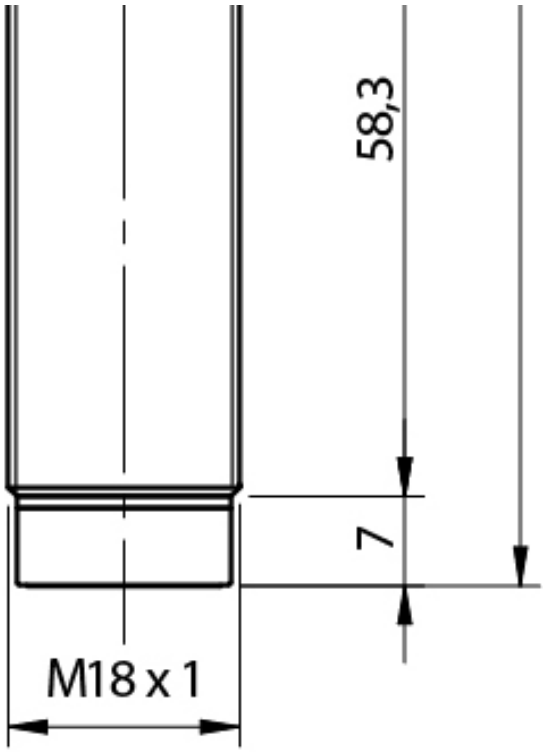


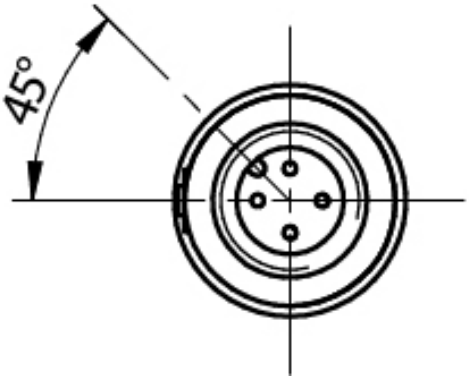


Response curves

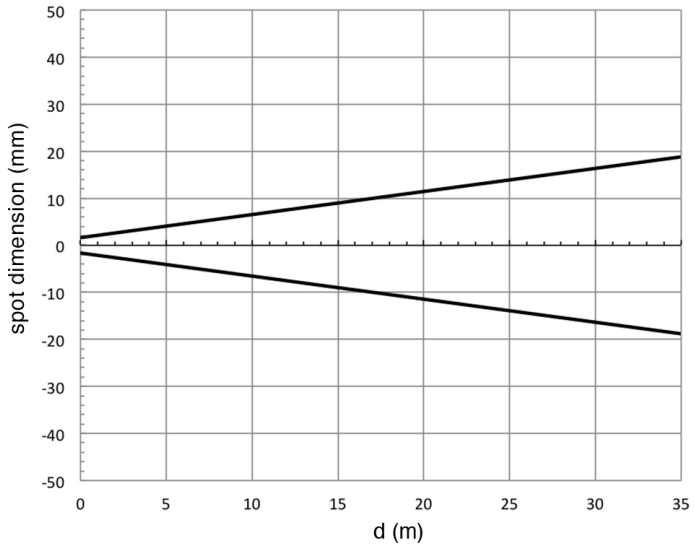


**Datasensing S.r.l.**
Strada S.Caterina, 235
41122 Modena (MO)
Tel. 059 420411
Fax 059 253973
E-mail
info@datasensing.com

**date of printing**
25/10/2026
03:38:07