FA

FAR3/BP-0E

Photo.M18,PNP-NO+NC,M12 plug,Diffuse

M18 PHOTOELECTRIC SENSORS DC

OVERVIEW

- Complete range of M18 sensors with 10...30 Vdc power supply
- Axial and radial optic with flat surface
- Retro-reflective models for transparent objects detection, with red emission IP67 protection degree
- Metallic or plastic housing
- Sensitivity adjustment available for all models
- Total protection against any type of electric damages
- Approvals: CE and cULus listed

TECHNICAL FEATURES

Detection properties

Nominal sensing distance	100mm
Thermal drift of Sr	≤10% Sr
Repeat Accuracy	5%
Sensitivity adjustment	Trimmer

Application

Function Principle	Diffuse reflection (short distance, ≤200mm)
Notes	white target Kodak 90% 100 x 100mm
Optic position	Axial

Outputs

Output type	PNP NO+NC
Output Function	NO+NC
Switching frequency	250Hz
Response time	2ms

Electrical data

Operating Voltage	10…30VDC
No-Load supply current	≤ 30mA
Load current	≤100mA
Leakage current	≤10μA
Output voltage drop	≤2V@Iload=100mA
Max ripple content	≤10%
LED indicators	Yellow (Lon) or output status Lo/Do
Time delay before availability	≤200ms
Short-circuit protection	Short circuit (autoreset), Overvoltage

Reverse Polarity Protection	Polarity inversal, Inpulsive voltage
Emission	LED Red (660nm)
Interference to external light	5000lux (incandescent lamp), 10000lux (sunlight)

Mechanical data

Dimensions	M18 x 1 /L =81,6mm
Housing material	PBT / PC plug
Weight	30g
Connections	M12 plug
Active Head Material	PC
Tightening torque	1Nm
Operating temperature	- 25°C…+ 70° C (Without freeze)
Diameter/Dimension	M18

Test/Approvals

Approvals	CE cULus
EMC compatibility	EN 60947-5-2
Shocks and vibrations	Vibration IEC 60068-2-6 / Shock IEC 60068-2-27
Degree of protection	IP67

Accessories

Supplied Accessories	nuts M18 x 1, screwdriver

Generical Data

Dimensions	M18 x 1 /L =81,6mm
Operating Temperature	- 25°C…+ 70°C (Without freeze)
Mechanical Protection	IP67

CONNECTIONS

Eletrical diagram

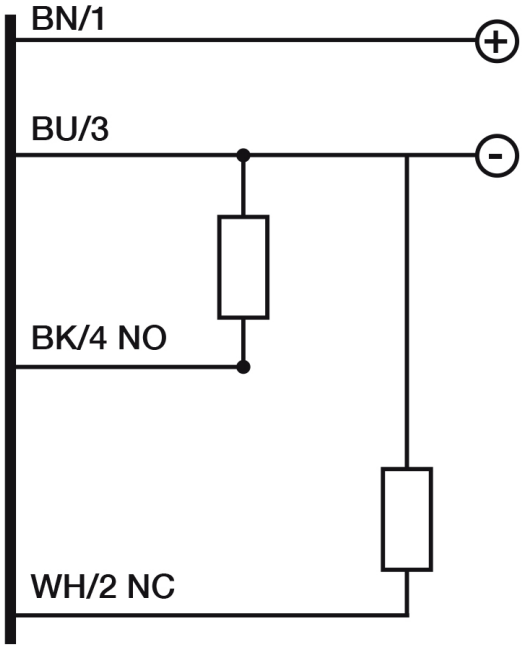

Connector

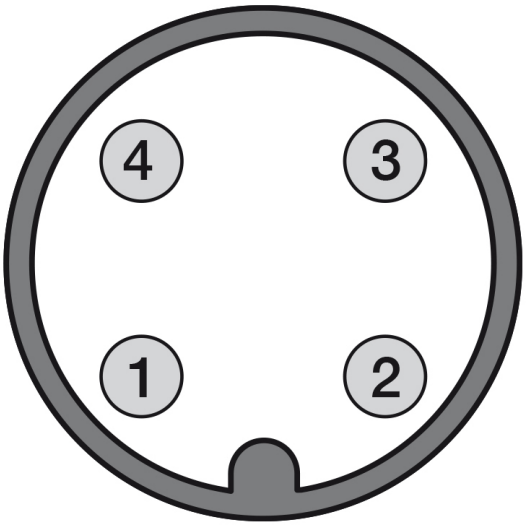

OTHERS

Dimensions

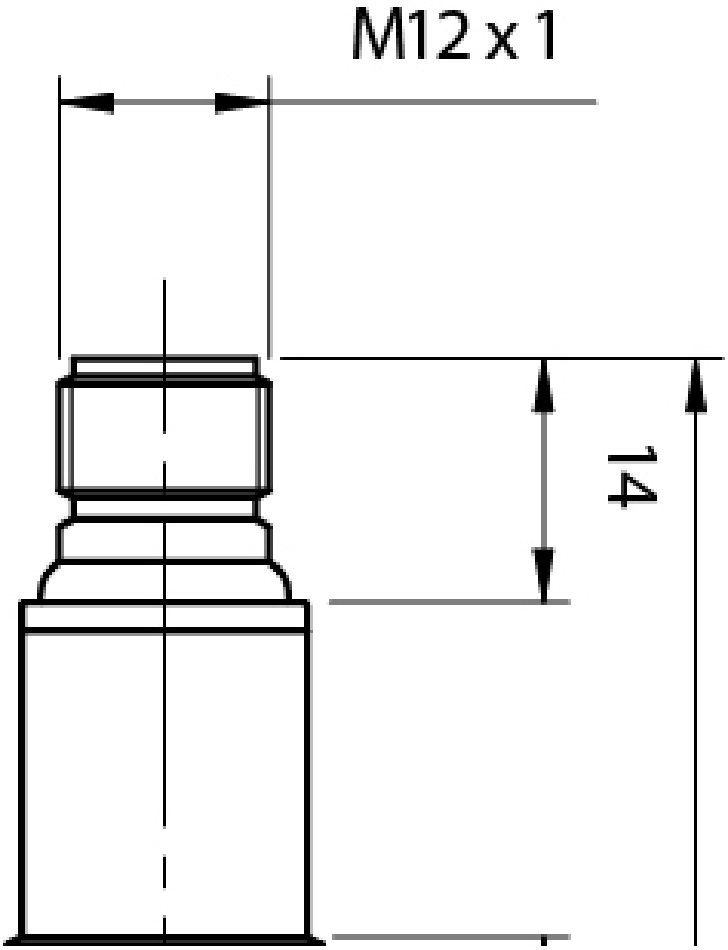

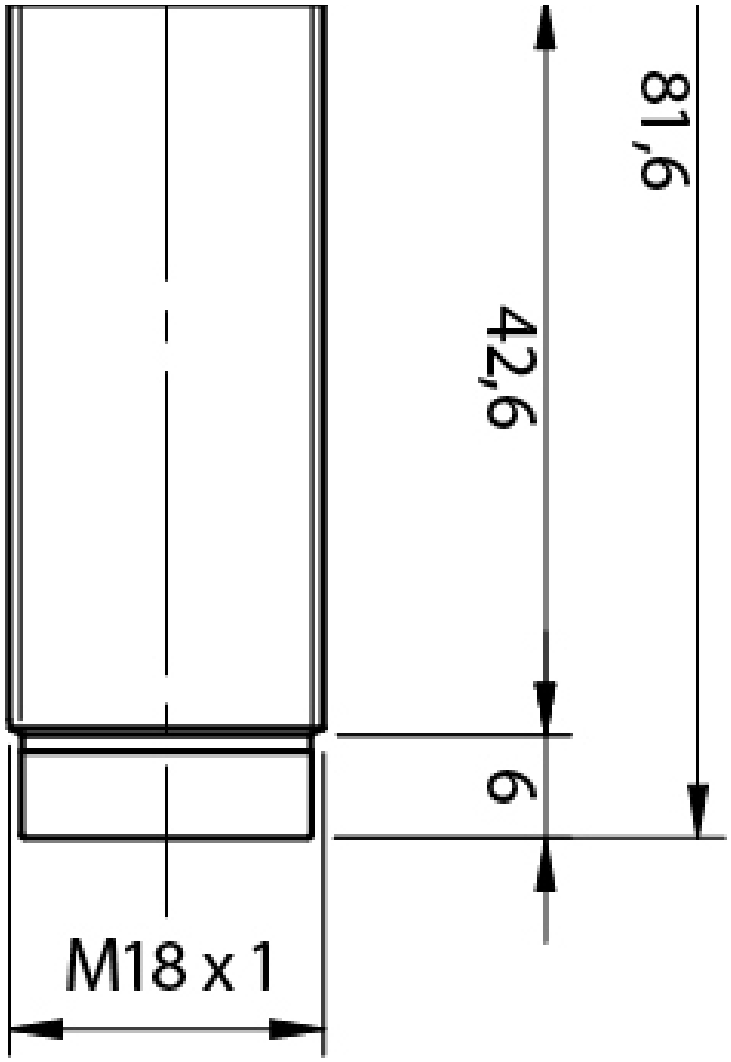

Response curves

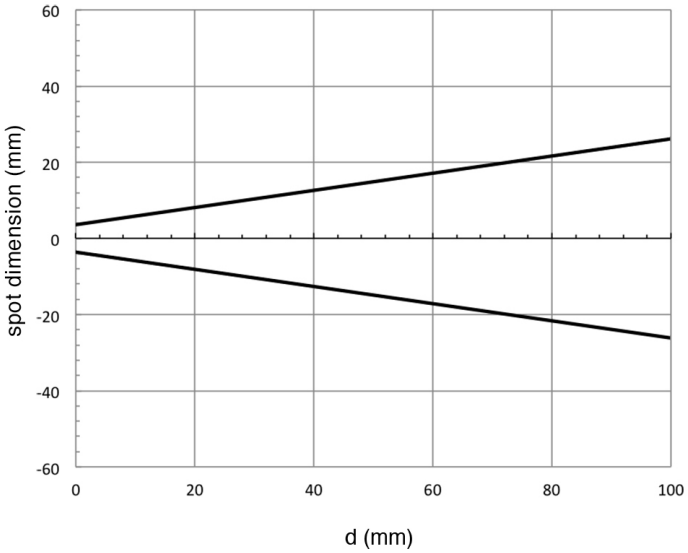

Datasensing S.r.l.
Strada S.Caterina, 235
41122 Modena (MO)
Tel. 059 420411
Fax 059 253973
E-mail
info@datasensing.com

date of printing
25/10/2026
03:40:55