FM

FMT6/BN-3H

Ind.M30,NPN-NO+NC,M12 Plug,Sch-LD

M5 - M8 - M12 - M18 - M30 INDUCTIVE SENSORS WITH FULL METAL HOUSING

OVERVIEW

TECHNICAL FEATURES

Detection properties

Nominal sensing distance	10mm
Operanting distance	0…8,1mm
Standard target	30x30mm FE360
Correction Factor	copper: 0 / aluminium: 0 / brass: 0,1 / stainless steel: 0,67
Thermal drift of Sr	< 10%
Repeat Accuracy	< 5% (UB 24V Ta=23°C ±5°C)
Hysteresis	1 … 20%

Application

Description	M30 short flush mount
Functions	Proximity

Outputs

Output type	NPN
Output Function	NO + NC
Switching frequency	80Hz

Electrical data

Operating Voltage	10...30Vdc
No-Load supply current	≤ 10mA
Load current	≤ 200mA
Leakage current	≤ 10µA
Output voltage drop	≤ 1,5V @200mA
Max ripple content	≤ 10%
LED indicators	Yellow LED output state
Time delay before availability	≤ 50ms
Short-circuit protection	Yes
Reverse Polarity Protection	Yes

Impulsive Overvoltage Protection	Yes
Protection against inductive loads	Yes

Mechanical data

Dimensions	M30 x 1,5 / L = 60mm
Mounting	Shielded
Material	AISI316L Stainless Steel
Housing material	AISI316L Stainless Steel
Weight	150g
Connections	M12 Plug
Active Head Material	stainless steel AISI316L
Tightening torque	50Nm
Operating temperature	-25°C…+70°C
0,25mm	1mm
Diameter/Dimension	M30

Test/Approvals

Approvals	CE cULus
EMC compatibility	IEC 60947-5-2
Shocks and vibrations	Vibration IEC 60068-2-6 / Shock IEC 60068-2-27
Degree of protection	IP68, IP69K

IK05	IK10
80bar	80bar

Accessories

Supplied Accessories	2 nuts M30x1.5

Generical Data

Dimensions	M30 x 1,5 / L = 60mm
Operating Temperature	-25°C…+70°C
Mechanical Protection	IP68 / IP69K

CONNECTIONS

Eletrical diagram

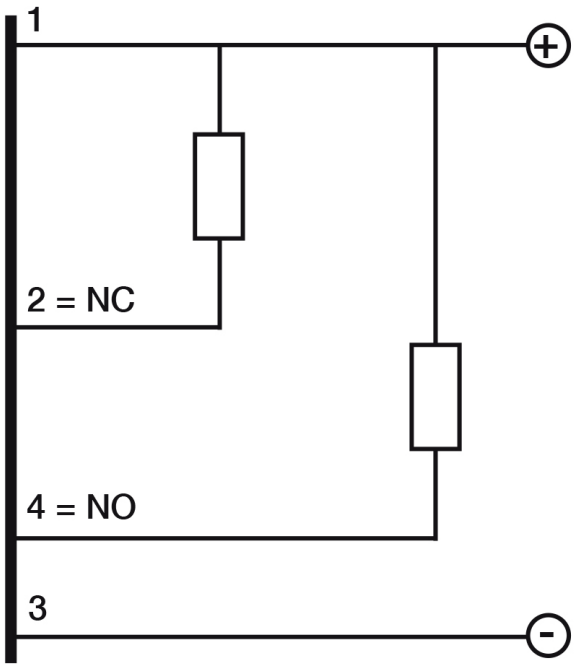

Connector

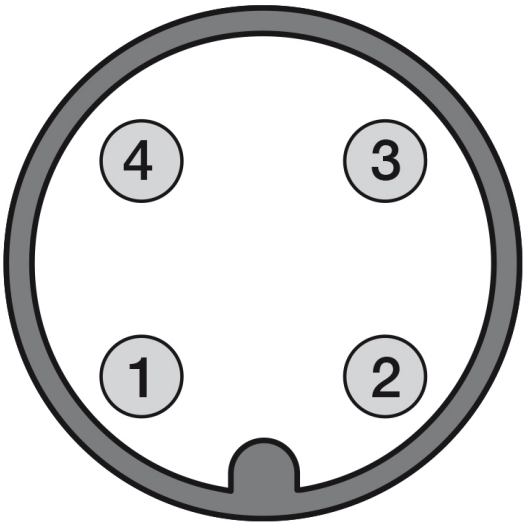

OTHERS

Dimensions

Image:

Response curves

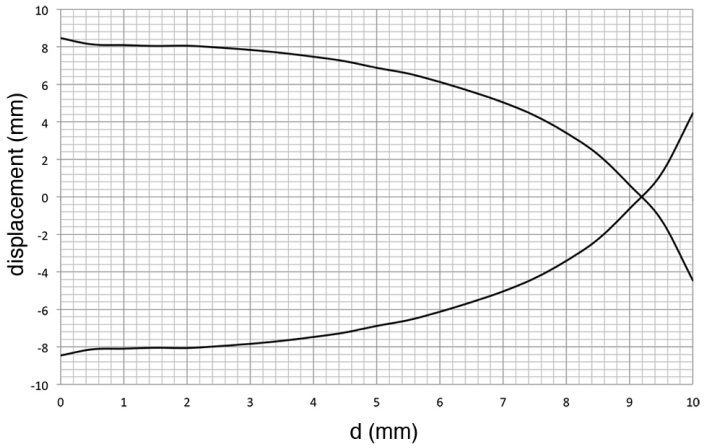

Installation

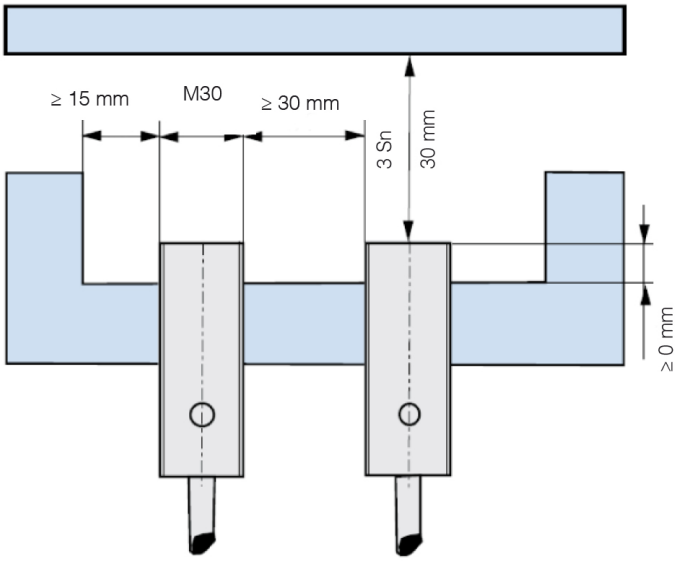

Datasensing S.r.l.
Strada S.Caterina, 235
41122 Modena (MO)
Tel. 059 420411
Fax 059 253973
E-mail
info@datasensing.com

date of printing
25/10/2026
05:00:29