QF

QFI4/BN-1F

Photo.Mini,NPN-NO+NC,M8 plug,Diffuse

METALLIC CUBIC MINIATURIZED PHOTOELECTRIC SENSORS. FOR HARSH ENVIRONMENTS OR FOOD AND BEVERAGE APPLICATIONS.

OVERVIEW

TECHNICAL FEATURES

Detection properties

Nominal sensing distance	200mm
Repeat Accuracy	5%
Sensitivity adjustment	Trimmer

Application

Function Principle	Diffuse reflection (medium distance, ≤600mm)
Notes	(Wide angle) white target 90% Kodak 100x100mm
Emitter/Receiver	Emitter/Receiver

Optic position	Radial 90°

Outputs

Output type	NPN NO+NC
Output Function	NO+NC
Switching frequency	1Khz
Response time	500µs

Electrical data

Operating Voltage	10…30VDC
No-Load supply current	≤ 25mA
Load current	≤100mA
Leakage current	≤100µA
Output voltage drop	≤2V@Iload=100mA
Max ripple content	≤10%
LED indicators	Yellow (status output), green (stability, powerON)
Time delay before availability	≤200ms
Short-circuit protection	Yes
Reverse Polarity Protection	Yes
Emission	LED Infrared (817nm)

Interference to external light	≤10000lux
Impulsive Overvoltage Protection	Yes

Mechanical data

Dimensions	31,4x21x11mm
Housing material	Stainless steel AISI 316L
Weight	65g
Connections	M8 plug 4pin
Active Head Material	PPSU
Operating temperature	- 25°C…+ 60° C (Without freeze)
Storage temperature	-40° ... +70°C
Diameter/Dimension	Cubic

Test/Approvals

Approvals	CE cULus ECOLAB
EMC compatibility	EN 60947-5-2
Shocks and vibrations	Vibration IEC 60068-2-6 / Shock IEC 60068-2-27
Degree of protection	IP68, IP69K

Accessories

Supplied Accessories	Mouting bracket screwdriver

Generical Data

Dimensions	31,4x21x11mm
Operating Temperature	- 15°C...+ 55°C (Without freeze)
Mechanical Protection	IP68, IP69K

CONNECTIONS

Eletrical diagram

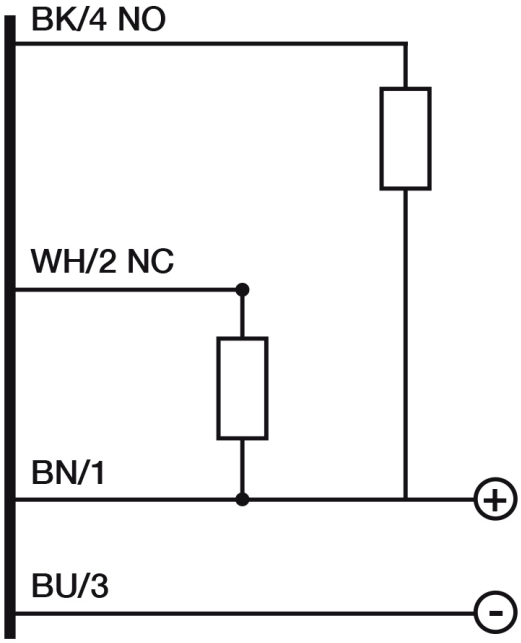

Connector

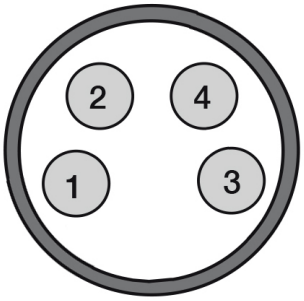

OTHERS

Dimensions

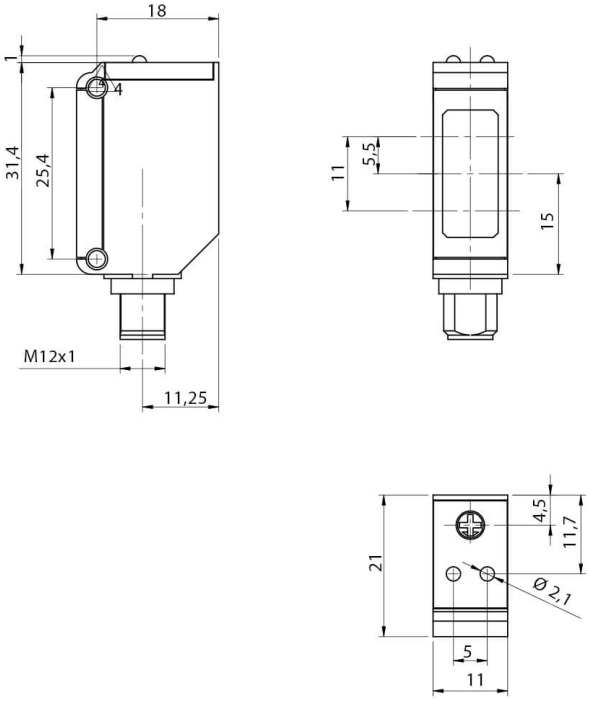

Response curves

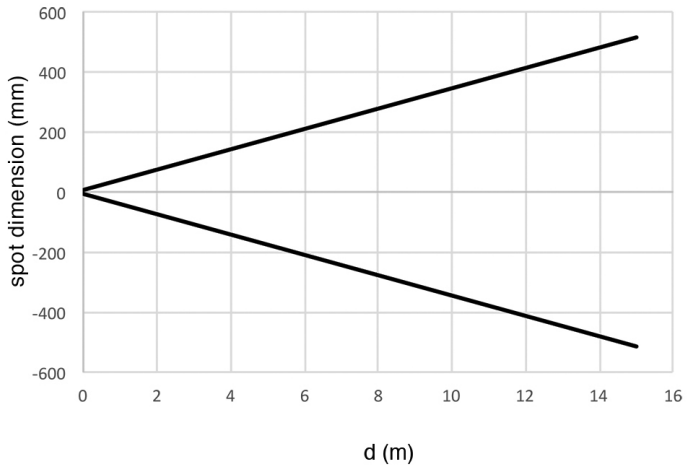

Datasensing S.r.l.
Strada S.Caterina, 235
41122 Modena (MO)
Tel. 059 420411
Fax 059 253973
E-mail
info@datasensing.com

date of printing
25/10/2026
05:56:02