FF + FFRS

FFR3/BN-1E

Photo.M18,NPN-NO+NC,M12 plug,Diffuse

M18 IP69K PHOTOELECTRIC SENSORS FOR HARSH ENVIRONMENTS

OVERVIEW

TECHNICAL FEATURES

Detection properties

Nominal sensing distance	100mm
Thermal drift of Sr	10% Sr
Repeat Accuracy	5%
Sensitivity adjustment	Teach-in

Application

Function Principle	Diffuse reflection (short distance, ≤200mm)
Notes	white target Kodak 90% 100 x 100mm

Optic position	Axial

Outputs

Output type	NPN NO+NC
Output Function	NO+NC
Switching frequency	500Hz
Response time	1ms

Electrical data

Operating Voltage	10…30VDC
No-Load supply current	≤ 35mA
Load current	≤100mA
Leakage current	≤10μA
Output voltage drop	≤2V@Iload=100mA
Max ripple content	≤10%
LED indicators	Green Stability ; Yellow Output state ,
Time delay before availability	≤200ms
Short-circuit protection	Yes
Reverse Polarity Protection	Yes
Emission	LED Red (660nm)

Interference to external light	5.000lux (incandescent lamp), 10.000lux (sunlight)

Mechanical data

Dimensions	M18x1/L=83mm
Housing material	Stainless steel AISI 316L / PA12 plug
Weight	60g
Connections	M12 plug
Active Head Material	PA12
Tightening torque	50Nm
Operating temperature	-25°C…+80°C (without freeze)
Diameter/Dimension	M18

Test/Approvals

Approvals	CE cULus ECOLAB Diversey
EMC compatibility	EN 60947-5-2
Shocks and vibrations	Vibration IEC 60068-2-6 / Shock IEC 60068-2-27
Degree of protection	IP68, IP69K

Accessories

Supplied Accessories	Nuts M18 x 1

Generical Data

Dimensions	M18x1/L=83mm

Operating Temperature	- 25°C…+ 80°C (Without freeze)
Mechanical Protection	IP68, IP69K

CONNECTIONS

Eletrical diagram

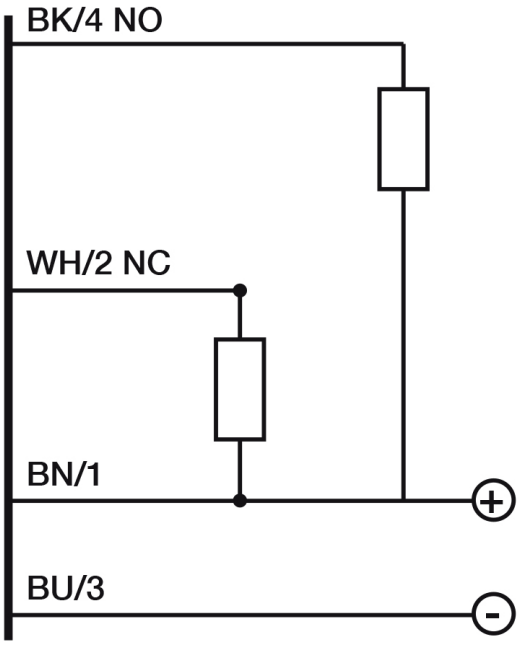

Connector

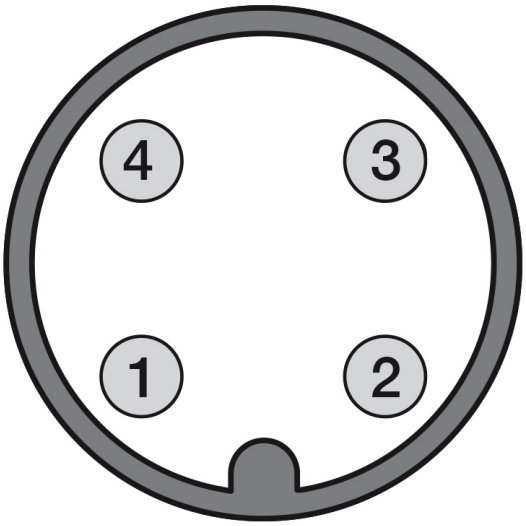

OTHERS

Dimensions

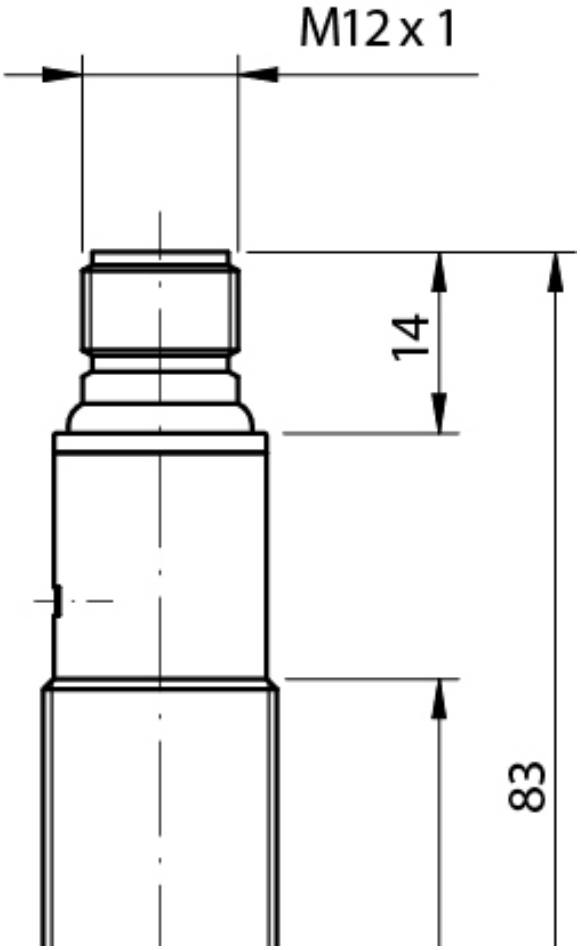

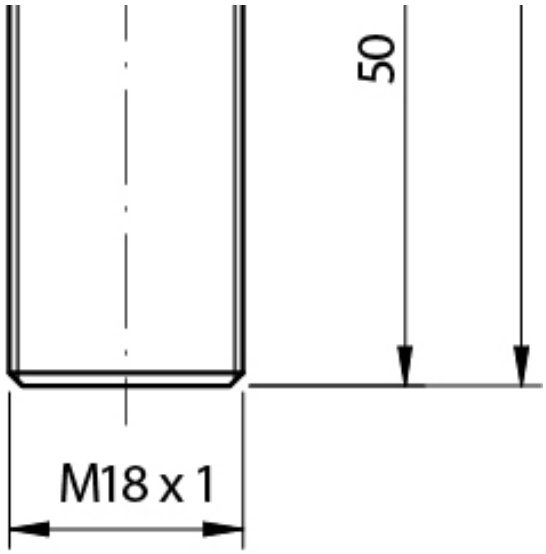

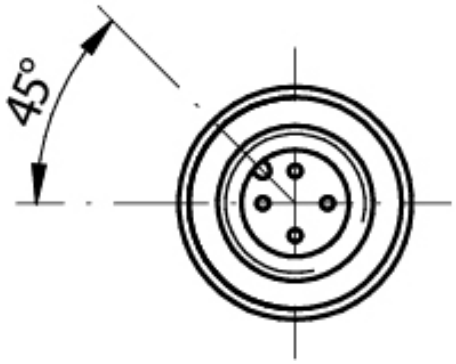

Response curves

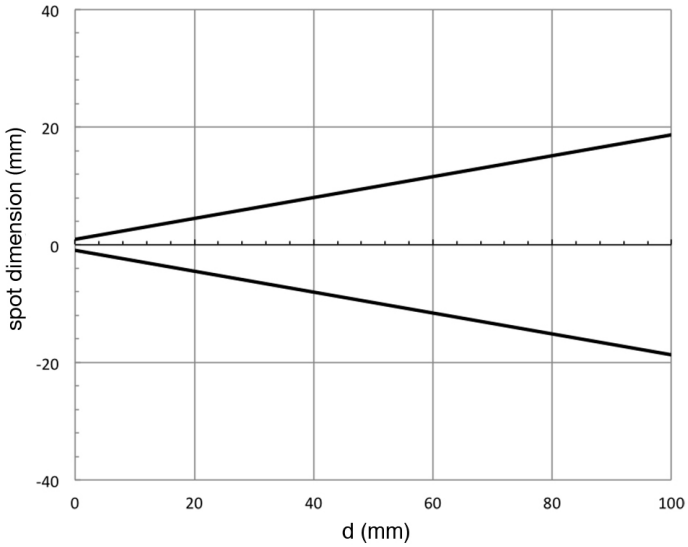

Datasensing S.r.l.
Strada S.Caterina, 235
41122 Modena (MO)
Tel. 059 420411
Fax 059 253973
E-mail
info@datasensing.com

date of printing
25/10/2026
03:34:45