FA

FARW/BN-1E

Photo.M18,NPN-NO+NC,M12 plug,BGS

M18 PHOTOELECTRIC SENSORS DC

OVERVIEW

- Complete range of M18 sensors with 10...30 Vdc power supply
- Axial and radial optic with flat surface
- Retro-reflective models for transparent objects detection, with red emission IP67 protection degree
- Metallic or plastic housing
- Sensitivity adjustment available for all models
- Total protection against any type of electric damages
- Approvals: CE and cULus listed

TECHNICAL FEATURES

Detection properties

Nominal sensing distance	350mm
Thermal drift of Sr	≤10% Sr
Repeat Accuracy	5%
Sensitivity adjustment	Trimmer
Minimum sensing distance (blind	35mm

zone)	

Application

Function Principle	Blackground suppression
Notes	white target Kodak 90% 100 x 100mm
Optic position	Axial

Outputs

Output type	NPN NO+NC
Output Function	NO+NC
Switching frequency	1Khz
Response time	500µs

Electrical data

Operating Voltage	10…30VDC
No-Load supply current	≤ 25mA
Load current	≤100mA
Leakage current	≤10µA
Output voltage drop	≤2V@Iload=100mA
Max ripple content	≤10%
LED indicators	Yellow (Lon) or output status Lo/Do
Time delay before availability	≤200ms

Short-circuit protection	Short circuit (autoreset), Overvoltage
Reverse Polarity Protection	Polarity inversal, Inpulsive voltage
Emission	LED Pin point Red(660nm)
Interference to external light	5000lux (incandescent lamp), 10000lux (sunlight)

Mechanical data

Dimensions	M18 x 1 /L =79,4mm
Housing material	Nickel plated brass / PC plug
Weight	100g
Connections	M12 plug
Active Head Material	PMMA
Tightening torque	25Nm
Operating temperature	- 25°C…+ 70° C (Without freeze)
Diameter/Dimension	M18

Test/Approvals

Approvals	CE cULus
EMC compatibility	EN 60947-5-2
Shocks and vibrations	Vibration IEC 60068-2-6 / Shock IEC 60068-2-27
Degree of protection	IP67

Accessories

Supplied Accessories	nuts M18 x 1, screwdriver

Generical Data

Dimensions	M18 x 1 /L =79,4mm
Operating Temperature	- 25°C…+ 70°C (Without freeze)
Mechanical Protection	IP67

CONNECTIONS

Eletrical diagram

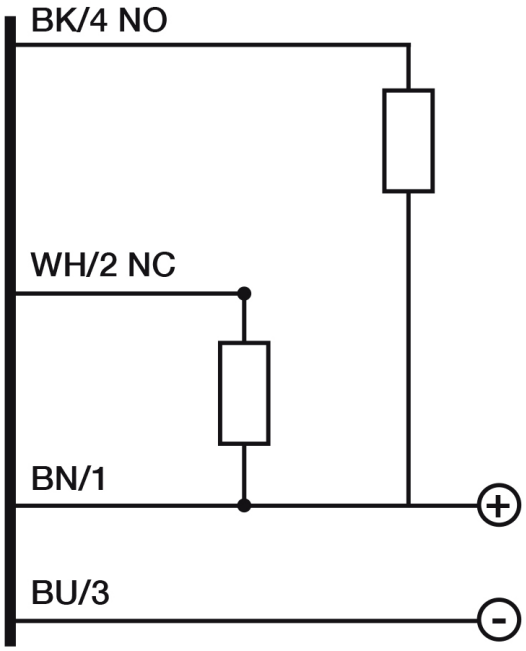

Connector

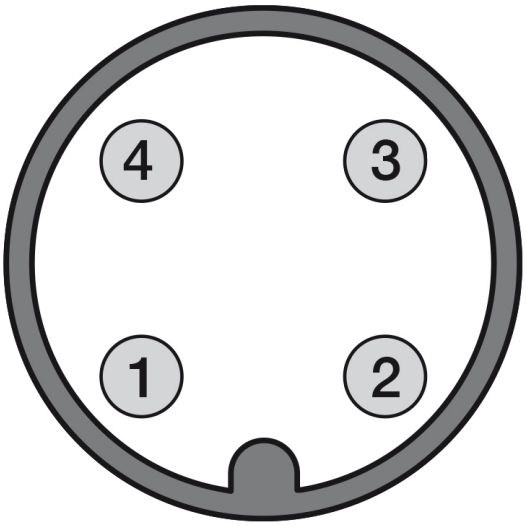

OTHERS

Dimensions

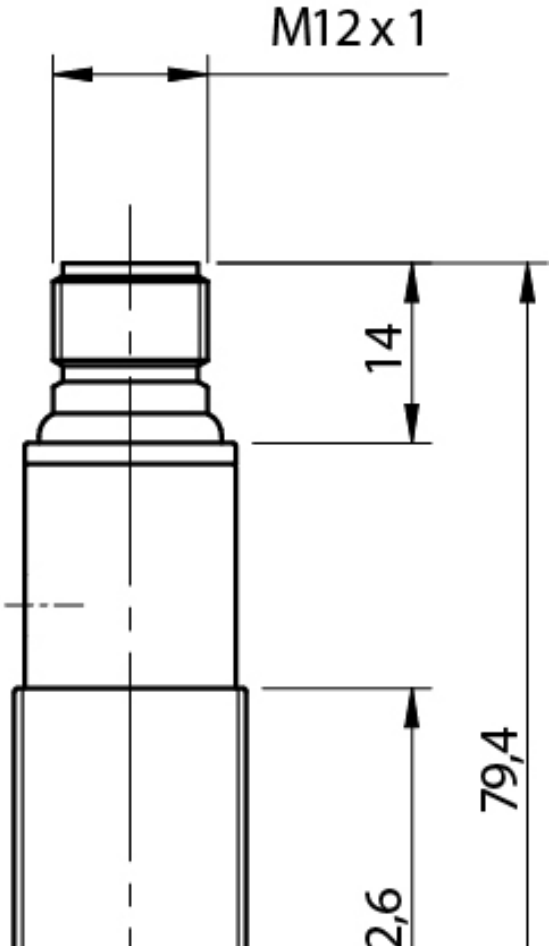

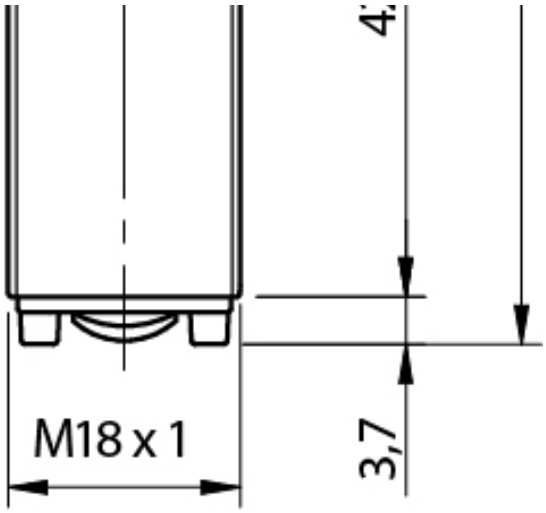

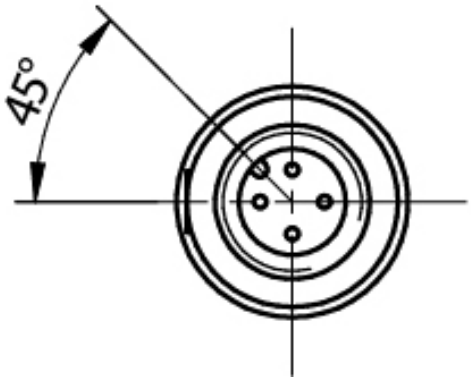

Response curves

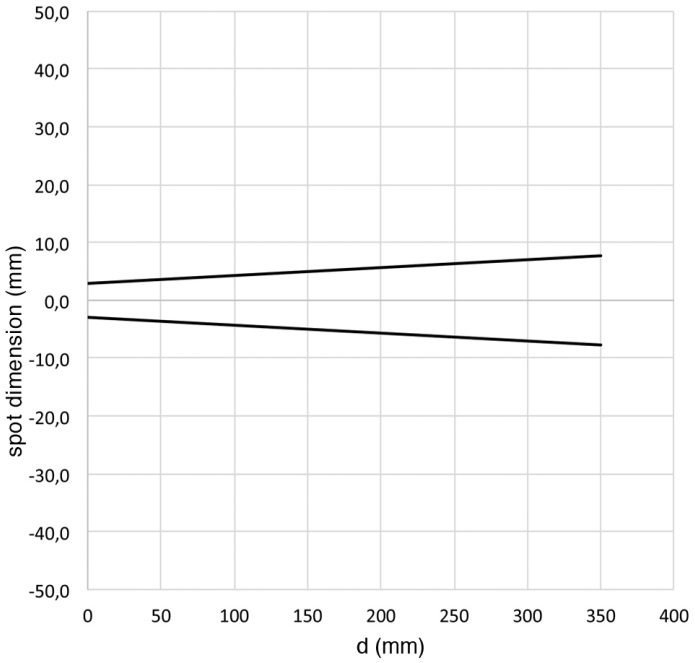

Datasensing S.r.l.
Strada S.Caterina, 235
41122 Modena (MO)
Tel. 059 420411
Fax 059 253973
E-mail
info@datasensing.com

date of printing
25/10/2026
05:15:05