# Q50

## Q50IS/B0-0E

**Photo.50x50,NPN/PNP-NO+NC,M12 plug,BGS**

COMPACT CUBIC 50 X 50 MM UNIVERSAL PHOTOELECTRIC SENSOR

# OVERVIEW

- Universal photoelectric sensor, excellent performances and high versatility due to the wide choice of different versions available
- Cable output or revolving connector, NPN/PNP outputs for Vdc models or SPDT relay output for multi -voltage Vdc / Vac models
- Complementary outputs NO + NC available on the Vdc models or selectable output NO/NC available on the multi-voltage Vdc/Vac models
- Totally protected against electrical damages
- Wide choice of optical functions available: Diffuse: 2 m; background suppression: 500 mm; polarized: 6m; through beam: 20 m. Dual multifunction output state LEDs

# TECHNICAL FEATURES

Detection properties

| | |
|---|---|
| Nominal sensing distance | 500mm |
| Sensitivity adjustment | Trimmer |
| Minimum sensing distance (blind zone) | 120mm |

Application

| | |
|---|---|
| Function Principle | Blackground suppression |

| | |
|---|---|
| Optic position | Axial |

Outputs

| | |
|---|---|
| Output type | NPN/PNP Selectable NO+NC |
| Output Function | NO+NC |
| Switching frequency | 500Hz |
| Response time | 1ms |

Electrical data

| | |
|---|---|
| Operating Voltage | 10…30VDC |
| No-Load supply current | ≤ 40mA |
| Load current | ≤200mA |
| Output voltage drop | ≤2,5V@Iload=200mA |
| Max ripple content | ≤10% |
| LED indicators | Yellow (Output status), Green (stability, powerON) |
| Time delay before availability | ≤200ms |
| Short-circuit protection | Yes |
| Reverse Polarity Protection | Yes |
| Emission | LED Infrared (850nm) |

Mechanical data

| | |
|---|---|
| Dimensions | 50X50mm |
| Material | PC/ABS |
| Housing material | PC/ABS |
| Weight | 105g |
| Connections | M12 plug |
| Active Head Material | PMMA |
| Operating temperature | - 20°C…+ 60°C ( UL omologation 0°C…60°C) |
| Diameter/Dimension | Cubic |

Test/Approvals

| | |
|---|---|
| EMC compatibility | EN 60947-5-2 |
| Shocks and vibrations | Vibration IEC 60068-2-6 / Shock IEC 60068-2-63 |
| Degree of protection | IP67 |

Accessories

| | |
|---|---|
| Supplied Accessories | Mounting bracket |

Generical Data

| | |
|---|---|
| Dimensions | 50x50x17mm |
| Operating Temperature | - 20°C…+ 60°C (Without freeze) |
| Mechanical Protection | IP67 |

# CONNECTIONS

Eletrical diagram

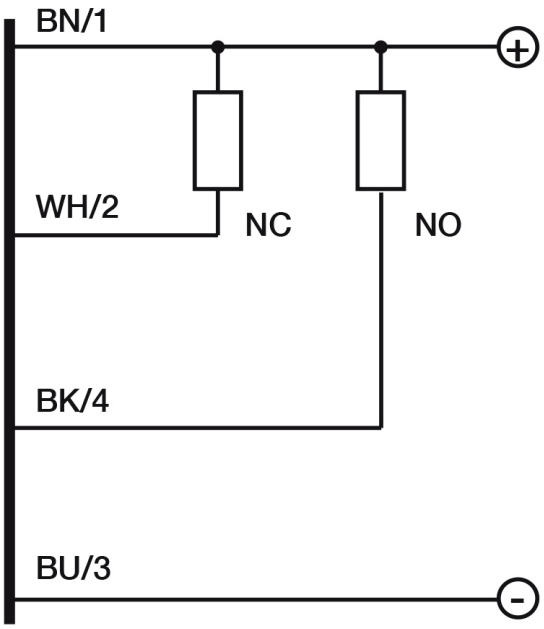


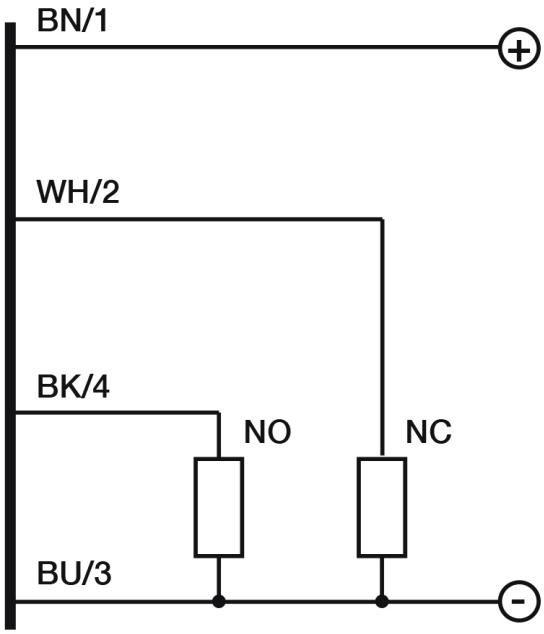


Connector

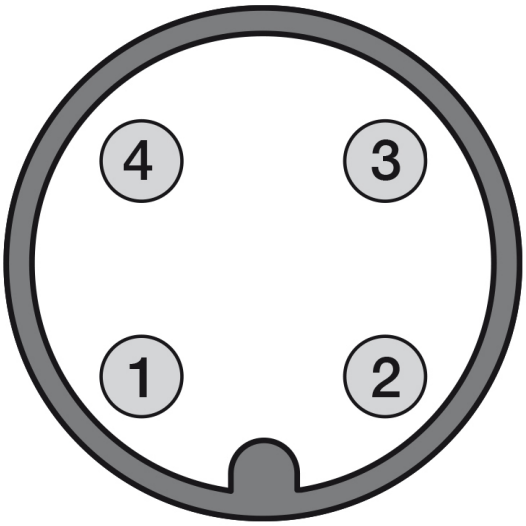


# OTHERS

Dimensions

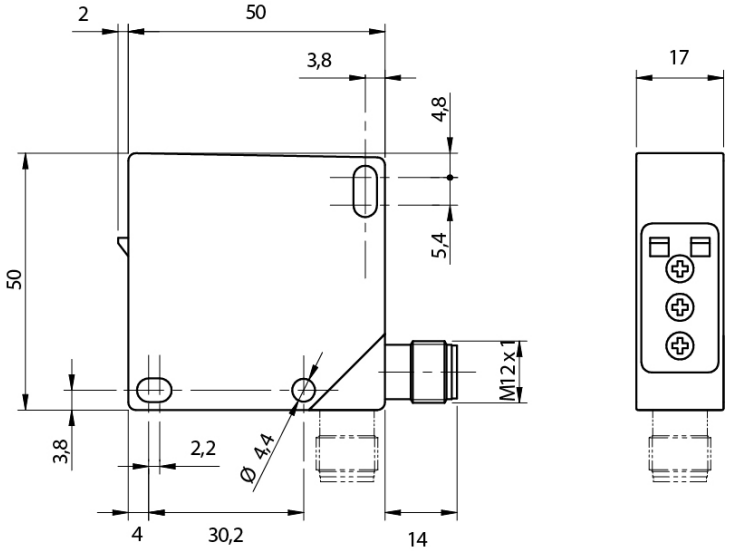


Response curves

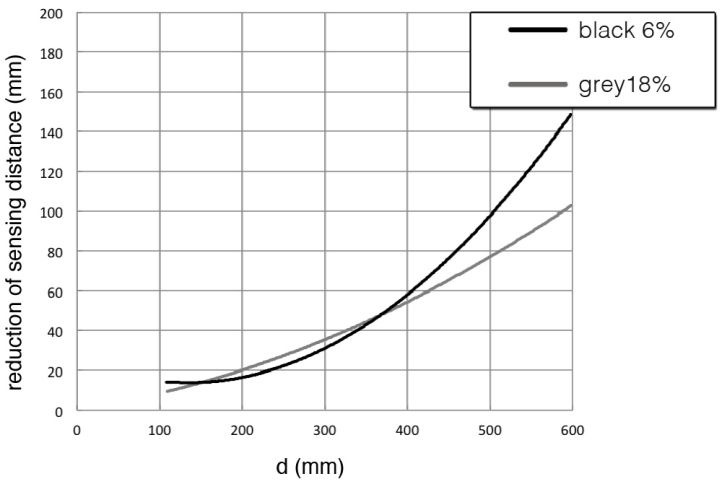


**Datasensing S.r.l.**
Strada S.Caterina, 235
41122 Modena (MO)
Tel. 059 420411
Fax 059 253973
E-mail
info@datasensing.com

**date of printing**
25/10/2026
03:52:01