Q50

Q50ID/B0-0E

Photo.50x50,NPN/PNP-NO+NC,M12 plug,Diff.

COMPACT CUBIC 50 X 50 MM UNIVERSAL PHOTOELECTRIC SENSOR

OVERVIEW

- Universal photoelectric sensor, excellent performances and high versatility due to the wide choice of different versions available
- Cable output or revolving connector, NPN/PNP outputs for Vdc models or SPDT relay output for multi -voltage Vdc / Vac models
- Complementary outputs NO + NC available on the Vdc models or selectable output NO/NC available on the multi-voltage Vdc/Vac models
- Totally protected against electrical damages
- Wide choice of optical functions available: Diffuse: 2 m; background suppression: 500 mm; polarized: 6m; through beam: 20 m. Dual multifunction output state LEDs

TECHNICAL FEATURES

Detection properties

Nominal sensing distance	20m
Sensitivity adjustment	Trimmer

Application

Function Principle	Receiver
Optic position	Axial

Outputs

Output type	NPN/PNP Selectable NO+NC
Output Function	NO+NC
Switching frequency	500Hz
Response time	1ms

Electrical data

Operating Voltage	10…30VDC
No-Load supply current	≤ 40mA
Load current	≤200mA
Output voltage drop	≤2,5V@Iload=200mA
Max ripple content	≤10%
LED indicators	Yellow (Output status), Green (stability, powerON)
Time delay before availability	≤200ms
Short-circuit protection	Yes
Reverse Polarity Protection	Yes

Mechanical data

Dimensions	50X50mm
Material	PC/ABS

Housing material	PC/ABS
Weight	105g
Connections	M12 plug
Active Head Material	PMMA
Operating temperature	- 20°C…+ 60°C (UL omologation 0°C…60°C)
Diameter/Dimension	Cubic

Test/Approvals

EMC compatibility	EN 60947-5-2
Shocks and vibrations	Vibration IEC 60068-2-6 / Shock IEC 60068-2-58
Degree of protection	IP67

Accessories

Supplied Accessories	Mounting bracket

Generical Data

Dimensions	50x50x17mm
Operating Temperature	- 20°C…+ 60°C (Without freeze)
Mechanical Protection	IP67

CONNECTIONS

Eletrical diagram

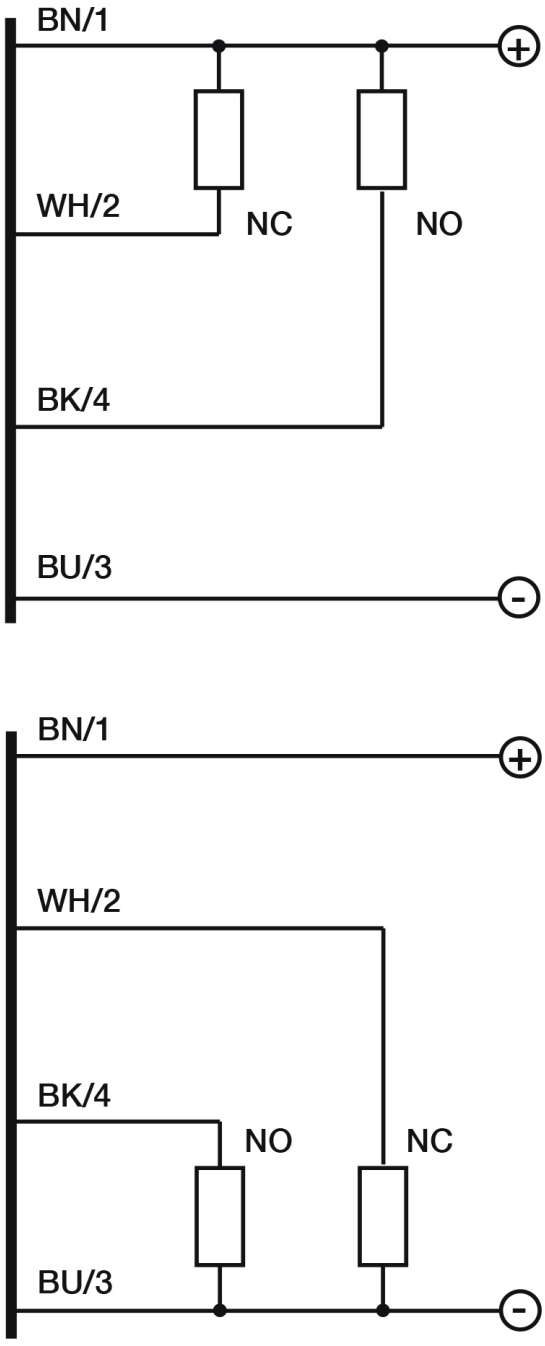

Connector

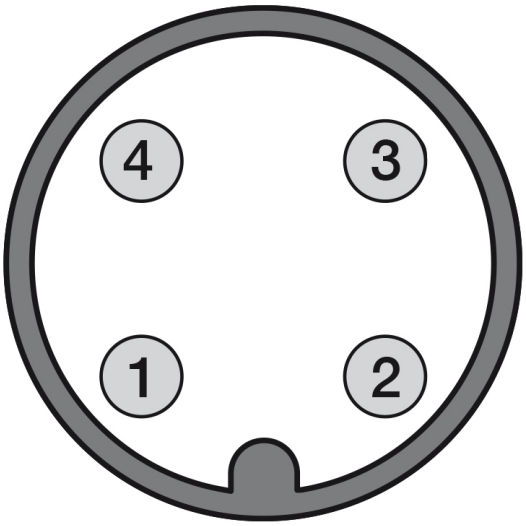

OTHERS

Dimensions

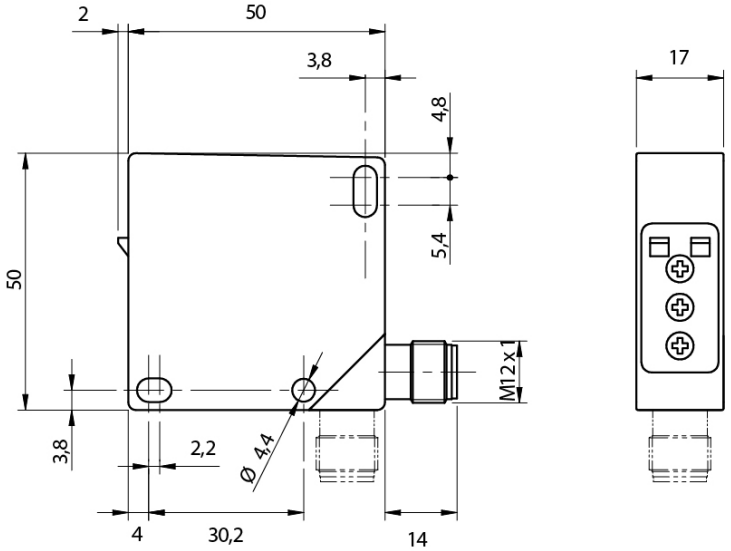

Response curves

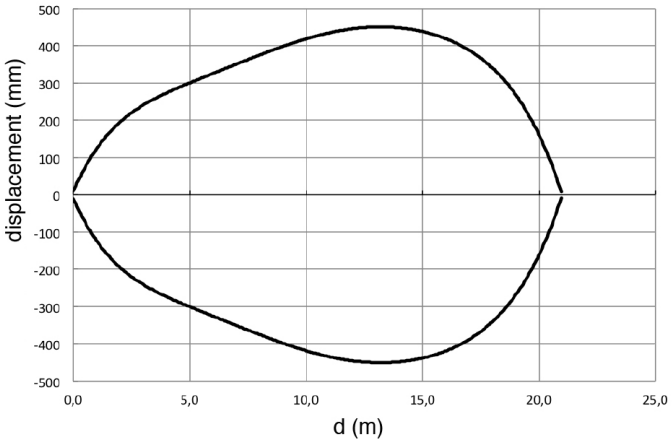

Datasensing S.r.l.
Strada S.Caterina, 235
41122 Modena (MO)
Tel. 059 420411
Fax 059 253973
E-mail
info@datasensing.com

date of printing
25/10/2026
03:51:57