AB1

AB1/AP-3A

Ind.M4,PNP-NO,Cable,Sch-LD

M4 CYLINDRICAL MINIATURIZED INDUCTIVE SENSORS

OVERVIEW

- Complete range of cylindrical ultraminiaturized inductive sensors M4
- IP67 protection degree

TECHNICAL FEATURES

Detection properties

Nominal sensing distance	1mm
Operanting distance	0…0,81mm
Standard target	4x4mm FE360
Correction Factor	copper: 0,3 ± 10% / aluminium: 0,22 ± 10% / brass: 0,32 ± 10% / stainless steel: 0,57 ± 10%
Thermal drift of Sr	< 10%
Repeat Accuracy	< 5% (UB 24V Ta=23°C ±5°C)

Hysteresis	1 … 20%

Application

Description	M4 standard flush mount
Functions	Proximity

Outputs

Output type	PNP
Output Function	NO
Switching frequency	3,5kHz

Electrical data

Operating Voltage	10...30Vdc
No-Load supply current	≤ 10mA
Load current	≤ 100mA
Leakage current	≤ 10µA
Output voltage drop	≤ 1,5V @100mA
Max ripple content	≤ 10%
LED indicators	Yellow LED output state
Time delay before availability	≤ 50ms
Short-circuit protection	Yes
Reverse Polarity Protection	Yes

Impulsive Overvoltage Protection	Yes
Protection against inductive loads	Yes

Mechanical data

Dimensions	M4 x 0,5 / L = 22mm
Mounting	Shielded
Material	AISI303 Stainless Steel
Housing material	AISI303 Stainless Steel
Weight	30g
Connections	2m PUR Cable
Active Head Material	PBT
Tightening torque	1,5Nm
Operating temperature	-25°C…+70°C
Diameter/Dimension	M4

Test/Approvals

Approvals	CE UL
EMC compatibility	IEC 60947-5-2
Shocks and vibrations	Vibration IEC 60068-2-6 / Shock IEC 60068-2-27
Degree of protection	IP67

Accessories	
Supplied Accessories	2 nuts M5x0.5

Generical Data	
Dimensions	M4 x 0,5 / L = 22mm
Operating Temperature	-25°C…+70°C
Mechanical Protection	IP67

CONNECTIONS

Eletrical diagram

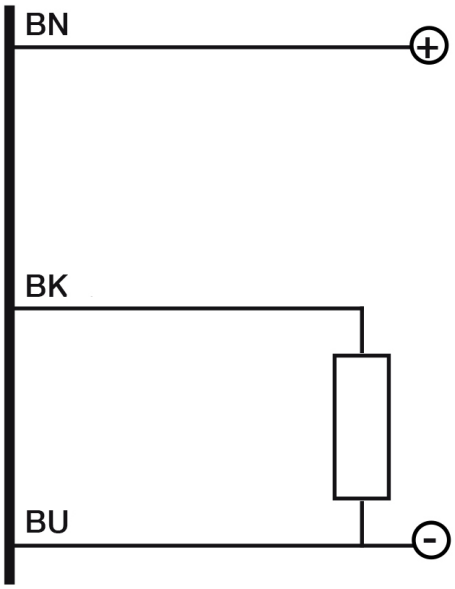

OTHERS

Dimensions

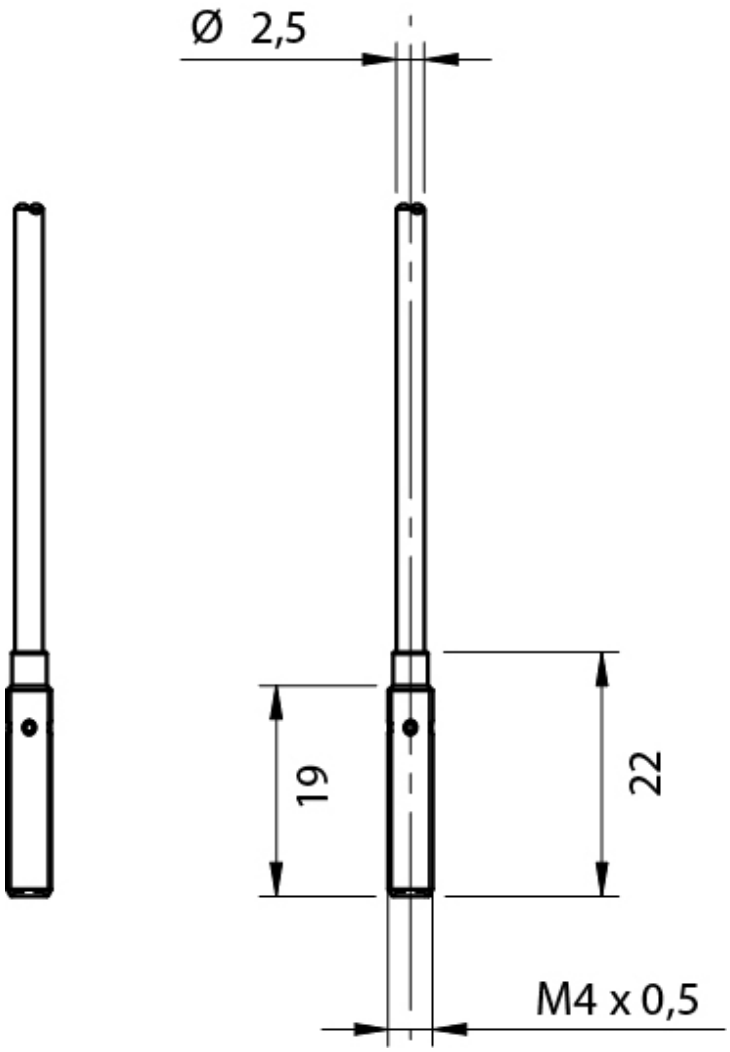

Response curves

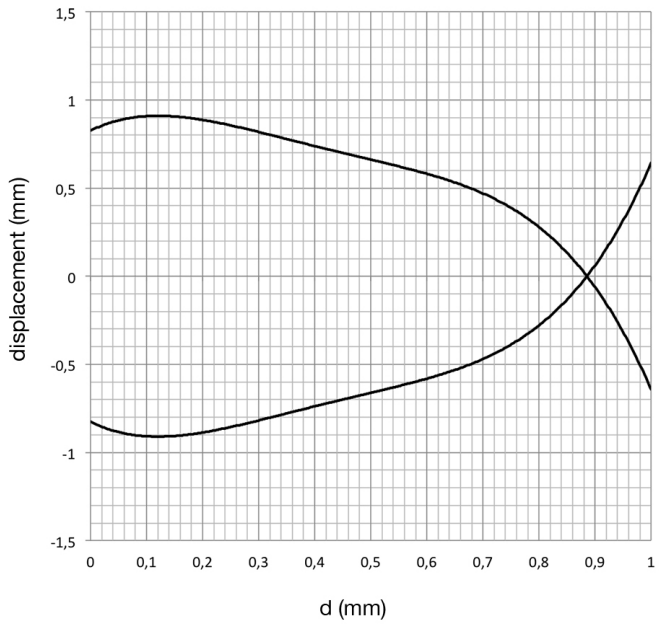

Installation

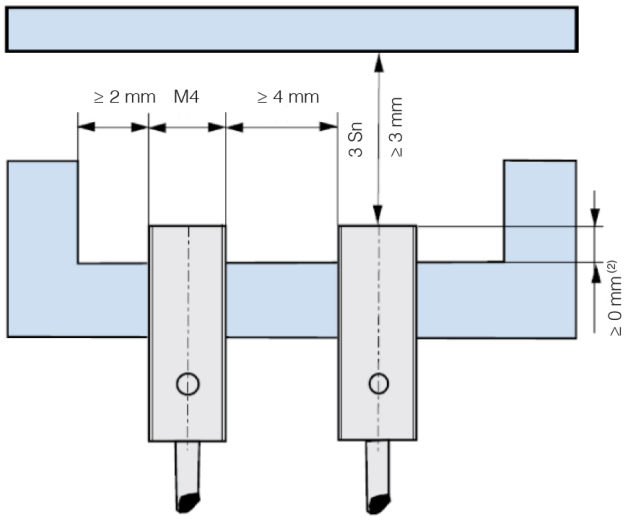

(2) ≥ 2.5 mm without ferro-magnetic material

Datasensing S.r.l.
Strada S.Caterina, 235
41122 Modena (MO)
Tel. 059 420411
Fax 059 253973
E-mail
info@datasensing.com

date of printing
25/10/2026
03:33:30