# AM

## AM1/AP-2A

**Ind.M12,PNP-NO,Cable,Nsch-STD**

**M12 CYLINDRICAL INDUCTIVE SENSORS**

# OVERVIEW

- Wide range of models: standard, short body, long distance
- Output: cable, M12 and M8 plug cable exit
- Models with 2, 3 wires
- ATEX models, cat. 3, available on request

# TECHNICAL FEATURES

Detection properties

| | |
|---|---|
| Nominal sensing distance | 4mm |
| Operanting distance | 0…3,2mm |
| Standard target | 12x12mm FE360 |
| Correction Factor | copper: 0,41 / aluminium: 0,47 / brass: 0,56 / stainless steel: 1,15 |
| Thermal drift of Sr | < 10% |
| Repeat Accuracy | < 5% (UB 24V Ta=23°C ±5°C) |

| | |
|---|---|
| Hysteresis | 1 … 20% |

Application

| | |
|---|---|
| Description | M12 standard no-flush mount |
| Functions | Proximity |

Outputs

| | |
|---|---|
| Output type | PNP |
| Output Function | NO |
| Switching frequency | 2kHz |

Electrical data

| | |
|---|---|
| Operating Voltage | 10...30Vdc |
| No-Load supply current | ≤ 10mA |
| Load current | ≤ 200mA |
| Leakage current | ≤ 10µA |
| Output voltage drop | ≤ 1,8V @200mA |
| Max ripple content | ≤ 10% |
| LED indicators | Yellow LED output state |
| Time delay before availability | ≤ 50ms |
| Short-circuit protection | Yes |

| | |
|---|---|
| Reverse Polarity Protection | Yes |
| Impulsive Overvoltage Protection | Yes |
| Protection against inductive loads | Yes |

Mechanical data

| | |
|---|---|
| Dimensions | M12 x 1 / L = 49,8mm |
| Mounting | Unshielded |
| Material | Nickel-plated brass |
| Housing material | Nickel-plated brass |
| Weight | 70g |
| Connections | 2m PVC Cable |
| Active Head Material | PBT |
| Tightening torque | 10Nm |
| Operating temperature | -25°C…+70°C |
| Diameter/Dimension | M12 |

Test/Approvals

| | |
|---|---|
| Approvals | CE UR |
| EMC compatibility | IEC 60947-5-2 |
| Shocks and vibrations | Vibration IEC 60068-2-6 / Shock IEC 60068-2-27 |
| Degree of protection | IP67 |

| | |
|---|---|
| Accessories | |
| Supplied Accessories | 2 nuts M12x1 |
| Generical Data | |
| Dimensions | M12 x 1 / L = 49,8mm |
| Operating Temperature | -25°C…+70°C |
| Mechanical Protection | IP67 |

# CONNECTIONS

Eletrical diagram

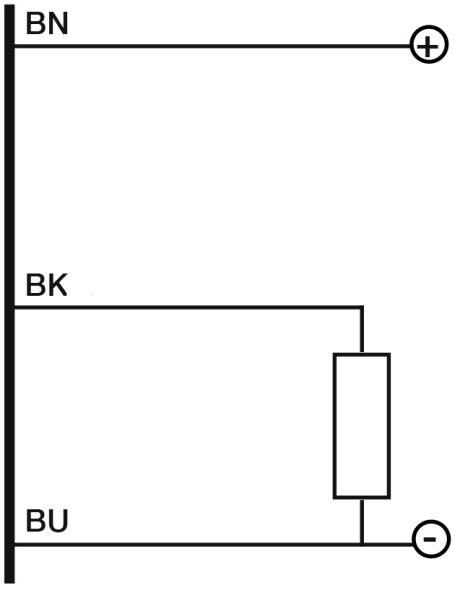


# OTHERS

Dimensions

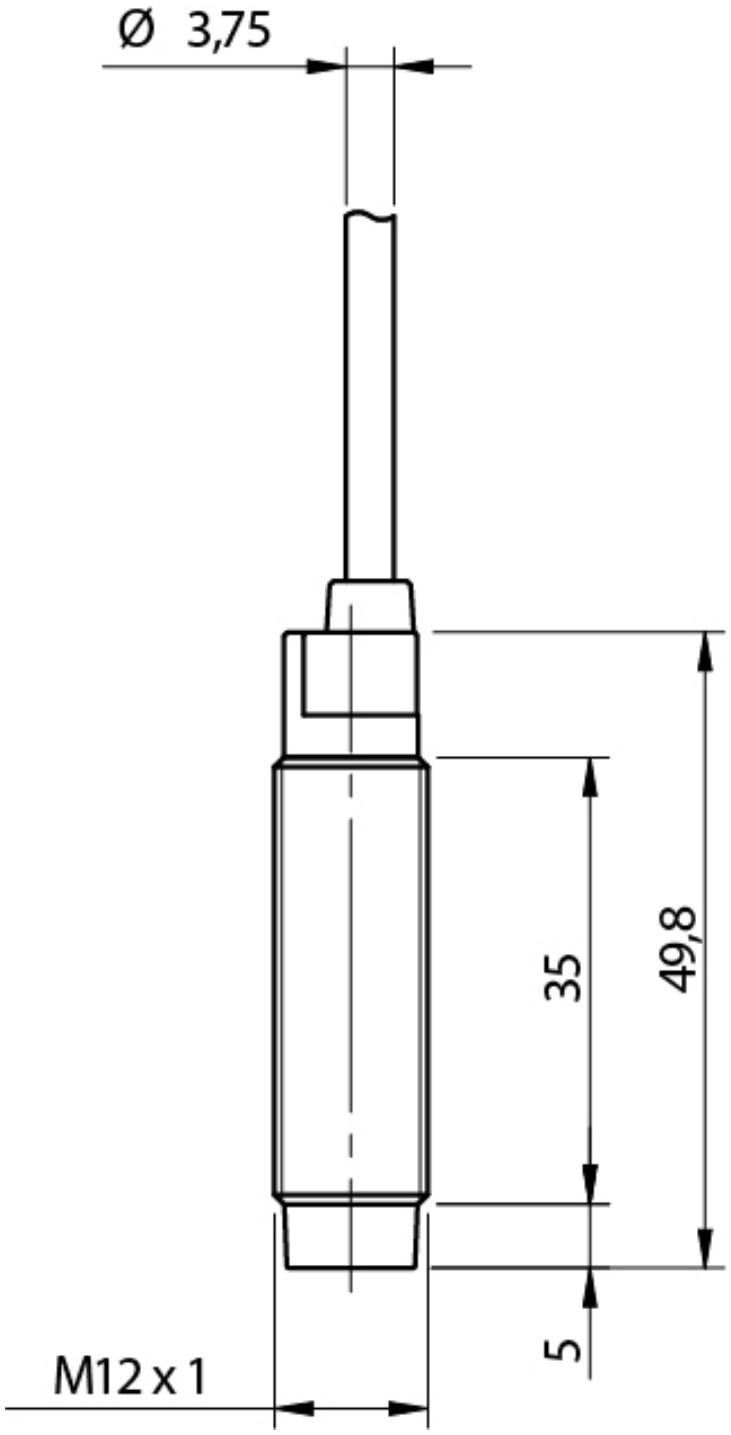


Response curves

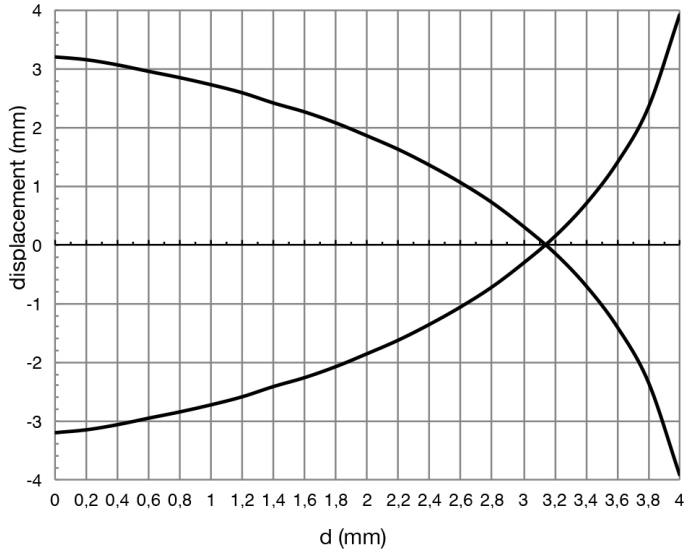


## Installation

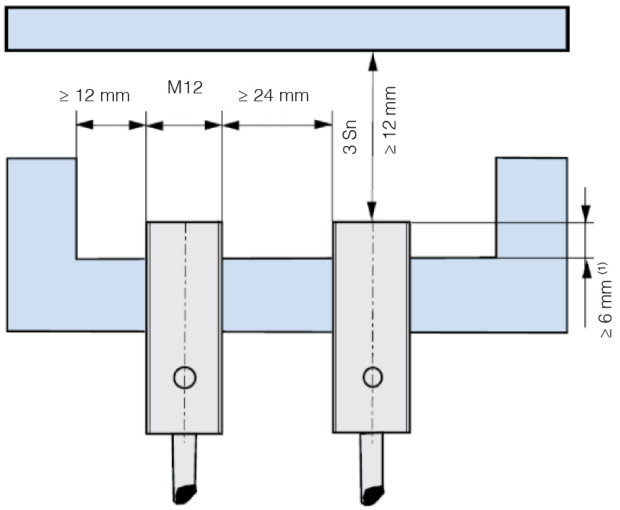


(1) ≥ 0,6 mm for non magnetic materials

**Datasensing S.r.l.**
Strada S.Caterina, 235
41122 Modena (MO)
Tel. 059 420411
Fax 059 253973
E-mail
info@datasensing.com

**date of printing**
25/10/2026
03:25:16