# IL1

## IL1/AN-3A

**Ind.10x28x16,NPN-NO,Cable,Sch-LD**

**10 X 28 X 16 MM CUBIC MINIATURIZED INDUCTIVE SENSORS**

# OVERVIEW

- Compact dimensions: 10 x 28 x 16 mm
- Supply voltage 10...30 Vdc, output current 300 mA
- LED status indicator
- IP 67 housing protection
- Complete protection against electrical damages

# TECHNICAL FEATURES

Detection properties

| | |
|---|---|
| Nominal sensing distance | 3mm |
| Operanting distance | 0…2,4mm |
| Standard target | 12x12mm FE360 |
| Correction Factor | copper: 0,25 / aluminium: 0,28 / brass: 0,37 / stainless steel: 0,63 |
| Thermal drift of Sr | < 10% |
| | |

| | |
|---|---|
| Repeat Accuracy | < 5% (UB 24V Ta=23°C ±5°C) |
| Hysteresis | 1 … 20% |

Application

| | |
|---|---|
| Description | 10,3x28x16mm cubic flush mount |
| Functions | Proximity |

Outputs

| | |
|---|---|
| Output type | NPN |
| Output Function | NO |
| Switching frequency | 3kHz |

Electrical data

| | |
|---|---|
| Operating Voltage | 10...30Vdc |
| No-Load supply current | ≤ 10mA |
| Load current | ≤ 300mA |
| Leakage current | ≤ 0,12mA |
| Output voltage drop | ≤ 1,5V @100mA |
| Max ripple content | ≤ 10% |
| LED indicators | Yellow LED output state |
| Time delay before availability | ≤100ms |
| Short-circuit protection | Yes |

| | |
|---|---|
| Reverse Polarity Protection | Yes |
| Impulsive Overvoltage Protection | Yes |
| Protection against inductive loads | Yes |

Mechanical data

| | |
|---|---|
| Dimensions | 28 x 16 x 10,3 mm |
| Mounting | Shielded |
| Material | PA |
| Housing material | PA |
| Weight | 63g |
| Connections | 2m PVC Cable |
| Active Head Material | PA |
| Operating temperature | -25°C…+70°C |
| Diameter/Dimension | 10,3x28x16mm |

Test/Approvals

| | |
|---|---|
| Approvals | CE |
| EMC compatibility | IEC 60947-5-2 |
| Shocks and vibrations | Vibration IEC 60068-2-6 / Shock IEC 60068-2-27 |
| Degree of protection | IP67 |

Generical Data

| | |
|---|---|
| Dimensions | 28 x 16 x 10,3 mm |
| Operating Temperature | -25°C…+70°C |
| Mechanical Protection | IP67 |

# CONNECTIONS

Eletrical diagram

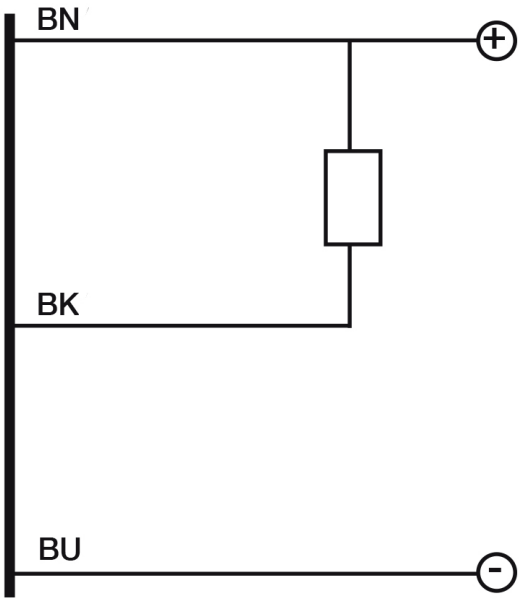


# OTHERS

Dimensions

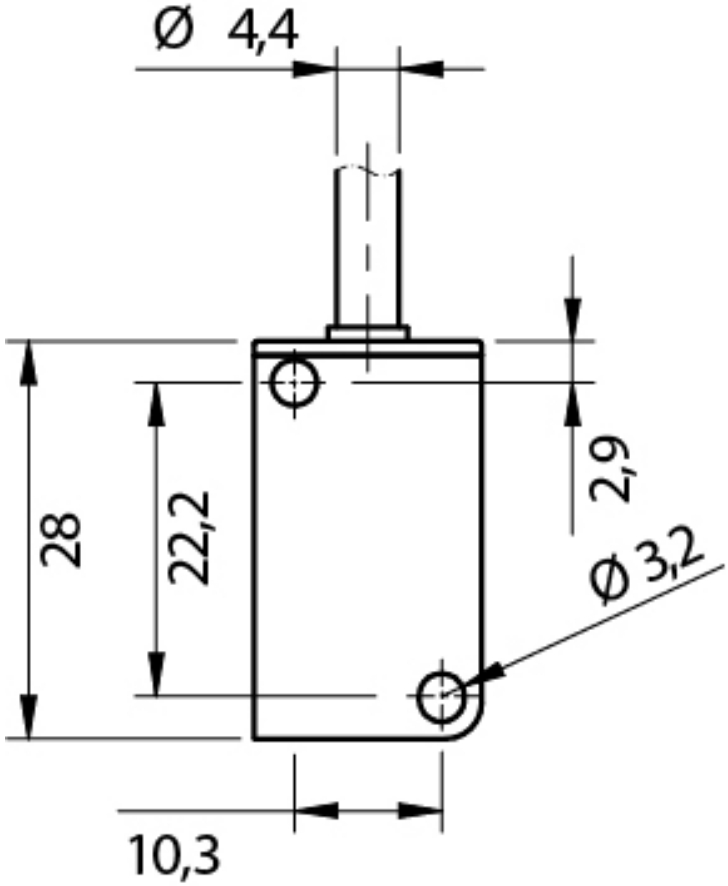


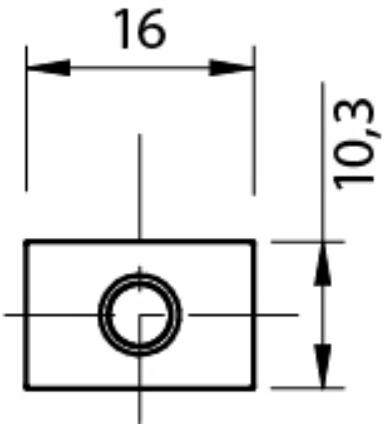


Response curves

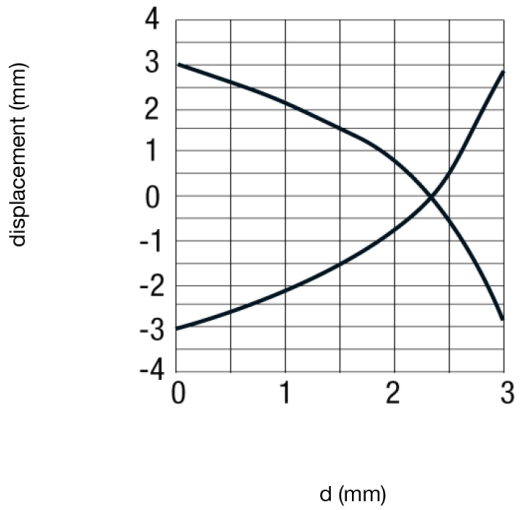


Installation

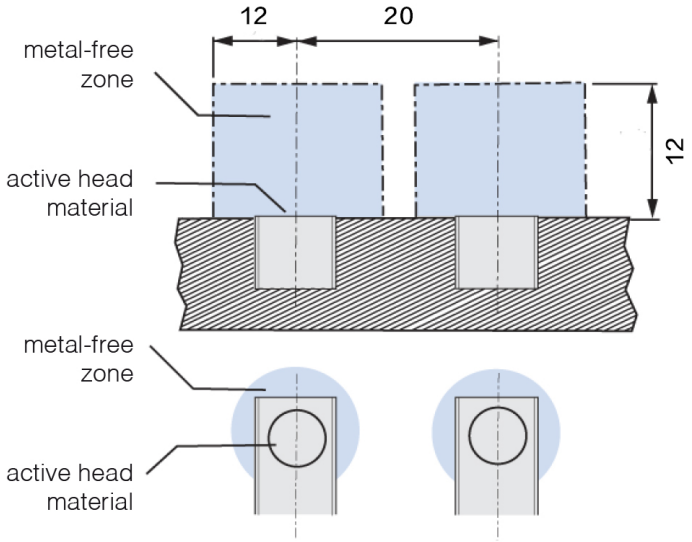


**Datasensing S.r.l.**
Strada S.Caterina, 235
41122 Modena (MO)
Tel. 059 420411
Fax 059 253973
E-mail
info@datasensing.com

**date of printing**
25/10/2026
03:33:45