User Guide

ThinkStation P3 Tiny Gen 2

Third Edition (February 2026)

© Copyright Lenovo 2025, 2026.

LIMITED AND RESTRICTED RIGHTS NOTICE: If data or software is delivered pursuant to a General Services Administration “GSA” contract, use, reproduction, or disclosure is subject to restrictions set forth in Contract No. GS-35F-05925.

Contents

Chapter 1. Overview . . . 1
Front . . . 1
Rear . . . 1
Specifications . . . 2
USB specifications . . . 4

Chapter 2. Get started . . . 6
Initial setup . . . 6
Connect to an external display . . . 6
Use with a Tiny-In-One monitor . . . 6
Connect to a Bluetooth device . . . 7
Conventional pair . . . 8
Set the power plan . . . 8
Smart power-on feature (for selected models) . . . 8
The Vantage app . . . 8

Chapter 3. Features . . . 10
Lenovo AI Now or Tianxi (for selected models) . . . 10
Security solutions . . . 10
Use physical locks . . . 10
Use software security solutions . . . 11
Use BIOS security solutions . . . 11
UEFI BIOS passwords . . . 13

Chapter 4. UEFI BIOS . . . 15
Enter the UEFI BIOS menu . . . 15
Navigate the UEFI BIOS menu . . . 15
Map UEFI BIOS USB ports to physical connectors . . . 15
Update the UEFI BIOS . . . 16
From the Vantage app . . . 16
From the Lenovo Support Web site . . . 16
From the Windows Update . . . 17
Remote update via Windows Remote Desktop . . . 17

Chapter 5. RAID . . . 18
What is RAID . . . 18
RAID Level . . . 18
Configure the system BIOS to enable NVMe RAID functionality . . . 18
Configure RAID in UEFI mode . . . 18

Chapter 6. CRU replacement . . . 20
Before CRU replacement . . . 20
What is CRU . . . 20
CRU list . . . 20
System board illustration . . . 22
Prerequisites for hardware replacement . . . 23
Power adapter and power cord . . . 24
VESA mount bracket . . . 25
Vertical stand . . . 25
External Wi-Fi antenna . . . 26
Dust filter . . . 27
Top cover and front cover . . . 28
Bottom cover . . . 28
I/O bracket . . . 29
M.2 solid-state drive . . . 30
Memory module . . . 32
Internal speaker . . . 34
System fan . . . 35
Heat sink . . . 36
PCIe card and PCIe converter . . . 37
Graphics card heat sink . . . 38
Board to board module . . . 39

Chapter 7. Help and support . . . 42
Find your serial number . . . 42
Diagnose and troubleshoot your computer . . . 42
Troubleshoot and diagnose at Lenovo Support Web site . . . 43
Hardware scan . . . 43
Recover your Windows operating system . . . 43
Call Lenovo . . . 44
Before you contact Lenovo . . . 44
Lenovo Customer Support Center . . . 44
Self-help resources . . . 44
Purchase accessories or additional services . . . 45
Accessibility features . . . 45

Appendix A. Important notice for Quebec consumers . . . 46

Appendix B. Notice for USB connector name update . . . 47

Appendix C. Notices and trademarks . . . 48

© Copyright Lenovo 2025, 2026

About this documentation

This documentation applies to the ThinkStation® product models listed below.

Model name	Machine types (MT)
ThinkStation P3 Tiny Gen 2	30K5, 30K6, 30K7, 30K8, 30K0, 30K3, 30K4, 30K2

Further compliance information related to your product is available at https://www.lenovo.com/compliance.

Before using this documentation, please read the following information:

- *Setup Guide*
- *Safety and Warranty Guide*
- For more compliance information, refer to *Regulatory Notice* at https://support.lenovo.com/docs/common_commercial_rn and *Generic Safety and Compliance Notices* at https://pcsupport.lenovo.com/docs/generic_notices.
- Illustrations in this documentation might look different from your product.
- Depending on the model, some optional accessories, features, software programs, and user interface instructions might not be applicable to your computer.
- Microsoft® makes periodic feature changes to the Windows® operating system through Windows Update. As a result, some information in this documentation might become outdated. Refer to Microsoft resources for the latest information.
- Documentation content is subject to change without notice. To get the latest documentation, go to https://support.lenovo.com/documentation.

Chapter 1. Overview

Front

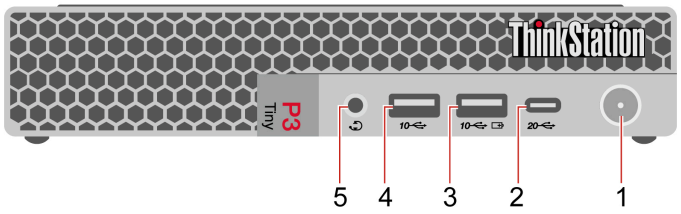

Item	Description	Item	Description
1	Power button with power indicator	2	USB-C connector (USB 20Gbps)
3	USB-A connector (USB 10Gbps, Always On USB)	4	USB-A connector (USB 10Gbps)
5	Headset connector		

* for selected models

Power indicator

Show the system status of your computer.

- **On:** The computer is starting up or working.
- **Off:** The computer is off or in hibernation mode.
- **Blinking:** The computer is in sleep mode.

USB-A connector (USB 10Gbps, Always On USB)

With the Always On USB feature enabled, the USB-A connector (USB 10Gbps, Always On USB) can charge a USB-A compatible device when the computer is on, off, in sleep mode, or in hibernation mode.

Related topics

- “USB specifications” on page 4.

Rear

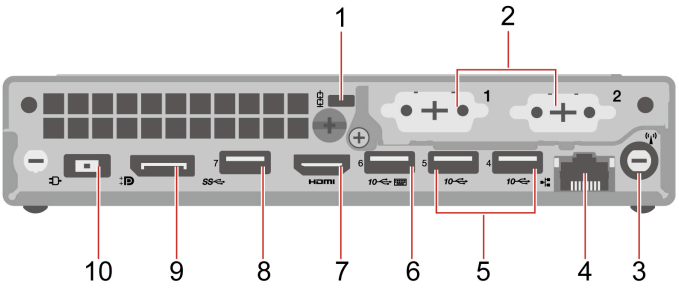

© Copyright Lenovo 2025, 2026

Item	Description	Item	Description
1	Security-lock slot	2	Optional connectors*
3	Wi-Fi® antenna slot*	4	Ethernet connector
5	USB-A connectors (USB 10Gbps)	6	USB-A connector (USB 10Gbps) (with smart power-on feature)
7	HDMI™ out connector	8	USB-A connector (USB 5Gbps)
9	DisplayPort™ out connector	10	Power adapter connector

* for selected models

Optional connector

Depending on the computer model, the optional connector might be one of the following:

- DisplayPort out connector
- HDMI out connector
- COM connector
- VGA out connector
- Ethernet connector
- USB-A connector
- USB-C connector (only for optional connector 1)
- USB-C connector (Thunderbolt™ 4) (only for optional connector 2)

Statement on USB transfer rate

Depending on many factors such as the processing capability of the host and peripheral devices, file attributes, and other factors related to system configuration and operating environments, the actual transfer rate using the various USB connectors on this device will vary and will be slower than the data rate listed in the connector name or below for each corresponding device.

USB device	Data rate (Gbit/s)
USB-C connector (Thunderbolt 3)	40
USB-C connector (Thunderbolt 4)	40

Related topics

- “Use physical locks” on page 10.
- “Connect to an external display” on page 6.
- “USB specifications” on page 4.

Specifications

Specification	Description
Dimensions	• Width: 37 mm (1.5 inches) • Height: 179 mm (7 inches) • Depth: 182.9 mm (7.2 inches)
Weight (without packaging)	Maximum configuration as shipped: 1.5 kg (3.3 lb)

Specification	Description
Hardware configuration	Type `Device Manager` in the Windows search box and then press Enter. Type the administrator password or provide confirmation, if prompted.
Power supply	• 170-watt automatic voltage-sensing power supply • 230-watt automatic voltage-sensing power supply • 245-watt automatic voltage-sensing power supply • 300-watt automatic voltage-sensing power supply • 330-watt automatic voltage-sensing power supply
Electrical input	• Input voltage: From 100 V ac to 240 V ac • Input frequency: 50/60 Hz
Memory	Up to two double data rate 5 (DDR5) small outline dual in-line memory modules (SODIMMs) Maximum memory capacity: 128 GB
Storage device	Up to three M.2 solid-state drives To view the storage drive capacity of your computer, type `Disk Management` in the Windows search box and then press Enter. **Note:** The storage drive capacity indicated by the system is less than the nominal capacity.
Video features	• The integrated graphics card supports the following: – DisplayPort out connector – HDMI out connector – USB-C connector (Thunderbolt 4)* – VGA out connector* • The optional discrete graphics card provides an enhanced video experience and extended capabilities.
Expansion	• M.2 solid-state drive slots • Memory slots • PCI-Express slot
Network features	• Bluetooth* • Ethernet LAN • Wireless LAN*

* for selected models

Operating environment

Maximum altitude (without pressurization)

- Operating: From 0 m (0 ft) to 3048 m (10 000 ft)
- Storage: From 0 m (0 ft) to 12192 m (40 000 ft)

Temperature

- Operating: From 5°C (41°F) to 35°C (95°F)

- Storage: From -40°C (-40°F) to 60°C (140°F)

Relative humidity

- Operating: 20%-80% (non-condensing)
- Storage: 10%–90% (non-condensing)

System memory speed

The Intel Core™ microprocessor families compatible with this ThinkStation computer feature an integrated memory controller. The memory controller provides the microprocessor with direct access to the system memory. Therefore, the system memory speed will be determined by the memory module type, frequency, size (capacity), the number of memory modules installed, and the microprocessor model.

Notes:

- The actual system memory speed of the memory modules varies depending on the microprocessor model. For example, your computer comes with 5600 MT/s memory modules, but the microprocessor only supports up to 5200 MT/s memory modules. Then the system memory speed will be no faster than 5200 MT/s.
- The microprocessor models supported in your computer might vary. For a list of supported microprocessor models, contact the Lenovo Customer Support Center.

Your computer can come with the following types of memory modules and will run up to the following speed:

Memory module type	Memory module speed
DDR5 non-ECC 6400 SoDIMMs	6400 MT/s
DDR5 non-ECC 5600 SoDIMMs	5600 MT/s

USB specifications

Note: Depending on the model, some USB connectors might not be available on your computer.

Connector name	Description
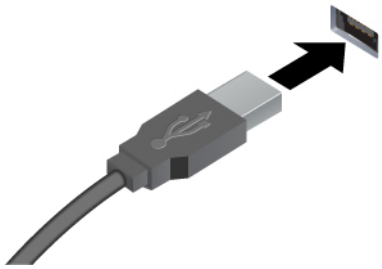 • SS USB-A connector (USB 5Gbps) • 10 USB-A connector (USB 10Gbps)	Connect USB-A compatible devices, such as a USB-A keyboard, USB-A mouse, USB-A storage device, or USB-A printer.
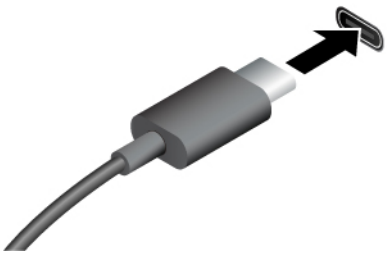 • 20 USB-C connector (USB 20Gbps)	• Charge USB-C compatible devices with the output voltage and current of 5 V and 3 A. • Connect to USB-C accessories to help expand your computer functionality. To purchase USB-C accessories, go to https://www.lenovo.com/accessories.

Chapter 2. Get started

Initial setup

This section helps you set up your computer.

1. Connect the cables of external displays to appropriate connectors on the graphics card installed in the computer.
2. Connect the mouse and the keyboard to the computer respectively.
3. Connect the cables of other devices according to the devices' instructions.
4. Connect the power cord to the power cord connector on the computer and then connect it to a properly-grounded electrical outlet.
5. Press the power button to turn on the computer.
6. Follow the on-screen instructions to complete the setup procedures.
7. Connect to a wired or wireless network:
   - Wired network: connect Ethernet cable of local network to the Ethernet connector on the computer.

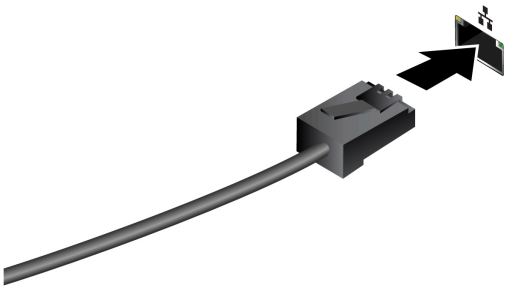

   - Wireless network: click the network icon on the bottom right of your display to connect to an available network. Provide required information if needed.

     Note: The wireless LAN module on your computer may support different standards. For some countries or regions, use of 802.11ax may be disabled according to local regulations.

Connect to an external display

Connect a projector or a monitor to your computer to give presentations or expand your workspace.

Connect a wireless display

Ensure that both your computer and the wireless display support Miracast®.

Press Windows logo key + K and then select a wireless display to connect.

Change display settings

1. Right-click a blank area on the desktop and select display settings.
2. Select the display that you want to configure and change display settings of your preference.

Use with a Tiny-In-One monitor

Note: When installing the computer to the TIO monitor, ensure that you use the ac power adapter that comes with the computer.

© Copyright Lenovo 2025, 2026

Primary video display output switching

The computer works with its integrated graphics card by default when it is installed to the TIO monitor. You can turn on or turn off the computer by pressing the power button on the TIO monitor. Any other devices connected to TIO monitor function the same as they are connected to the computer.

To switch the primary video display output from the integrated graphics card to the discrete graphics card, do the following:

1. Turn on or restart your computer.
2. Before Windows starts up, repeatedly press and release F1 (depending on the keyboard settings) until the Setup Utility program opens. If a BIOS password has been set, enter the correct password when prompted.
3. Locate the **Select Active Video** submenu and select **PEG**. Then press F10 to save changes and exit.
4. Connect the discrete-graphic-card connector on the computer with the DisplayPort or HDMI connector of the TIO monitor using an applicable dongle.
5. Press the mode-switching button on the TIO monitor to change from the TIO mode to the DP mode or HDMI mode.

When the computer works with the discrete graphics card, pressing the power button on the TIO monitor only turns on or turns off the TIO monitor. Devices connected to the TIO monitor do not function the same as they are connected to the computer.

Intel Turbo Boost Technology

Intel Turbo Mode capability is designed to allow the processor to assess its own thermals, current, and power to come up with a dynamic upper limit on its frequency. This means that the processor can run at frequency higher than the advertised base frequency, and at any frequency in the inclusive range between maximum turbo frequency and the advertised base frequency at any time.

If the computer is installed with a U7-265 or U9-285 microprocessor, the computer does not support Intel Turbo mode when installed in the following TIO monitors:

- ThinkCentre TIO27 (MT: 10YF)
- ThinkCentre 超级Q27 (MT: 10YF)
- ThinkCentre TIO27q (MT: 10YG)
- ThinkCentre TIO22Gen3
- ThinkCentre 超级Q22Gen3
- ThinkCentre TIO22Gen3Touch
- ThinkCentre 超级Q22Gen3Touch
- ThinkCentre TIO24Gen3
- ThinkCentre 超级Q24Gen3
- ThinkCentre TIO24Gen3Touch
- ThinkCentre 超级Q24Gen3Touch

Connect to a Bluetooth device

You can connect all types of Bluetooth-enabled devices to your computer, such as a keyboard, a mouse, a smartphone, or speakers. To ensure successful connection, place the devices at most 10 meters (33 feet) from the computer.

Conventional pair

This topic helps you connect to a Bluetooth device by conventional pair.

Step 1. Type **Bluetooth** in the Windows search box and then press Enter.

Step 2. Turn on both the Bluetooth on your computer and the Bluetooth device. Make sure the device is discoverable.

Step 3. Select the device when it is displayed on the **Add a device** list, and then follow the on-screen instructions.

Notes: If the Bluetooth connection failed, do the following:

1. Type **Device Manager** in the Windows search box and then press Enter.
2. Locate the Bluetooth adapter. Right-click and select **Update driver**.
3. Select **Search automatically for drivers**, and then follow the on-screen instructions.

Set the power plan

For ENERGY STAR® compliant computers, the following power plan takes effect when your computers have been idle for a specified duration:

- Turn off the display: After 10 minutes
- Put the computer to sleep: After 25 minutes

To awaken the computer from Sleep mode, press any key on your keyboard.

To set the power plan:

1. Type `Power Options` in the Windows search box and then press Enter.
2. Choose or customize a power plan of your preference.

Smart power-on feature (for selected models)

The smart power-on feature helps you start up or wake up the computer from the hibernation mode simply by pressing Alt+P.

Note: Ensure that the keyboard is connected to a USB connector supporting the smart power-on feature.

Enable or disable the smart power-on feature

To enable or disable the smart power-on feature:

Step 1. Restart the computer. When the logo screen is displayed, press F1 or Fn+F1.

Step 2. Select **Power → Smart Power On** and press Enter.

Step 3. Enable or disable the feature as desired.

Step 4. Press F10 or Fn+F10 to save the changes and exit.

The Vantage app

The Vantage app is a customized one-stop solution to help you maintain your computer with automated updates and fixes, configure hardware settings, and get personalized support.

To access the Vantage app, type **Vantage** in the Windows search box.

Notes:

- The available features vary depending on the computer model.
- The Vantage app makes periodic updates of the features to keep improving your experience with your computer. The description of features might be different from that on your actual user interface. You can download the latest version of Vantage app from Microsoft Store.

The Vantage app enables you to:

- Know the device status easily and customize device settings.
- Download and install UEFI BIOS, firmware, and driver to keep your computer up-to-date.
- Monitor your computer health, and secure your computer against outside threats.
- Scan your computer hardware and diagnose hardware problems.
- Look up warranty status (online).
- Access *User Guide* and helpful articles.

Chapter 3. Features

Lenovo AI Now or Tianxi (for selected models)

Lenovo AI Now or Tianxi is a personal and private AI assistant to help with inspiration, writing, summarizing, and quick settings for your computer. Depending on the country or region, either of them might be available.

Access the apps

- Use the Lenovo AI Now icon or Tianxi icon if present on the taskbar.
- Or type the app name in the Windows search box and press Enter.

Explore key features

- Import files to create your personal knowledge base and start searching, Q&A, summarization, and generation based on it.
- Set up your computer or find service information. For example, you can ask it to help turn on the Eye Care mode or find the nearest service center.

Notes:

- For more information about Lenovo AI Now or Tianxi, see the User Guide in the apps' Help Center.
- Software features may vary by computer model and be subject to change. Explore the apps based on your actual user interface.

Security solutions

Lenovo values your information security. Your computer can be secured by physical locks, software solutions, and BIOS solutions. They can protect your computer from harm, theft, or unauthorized use.

Use physical locks

Note: Lenovo makes no comments, judgments, or warranties about the function, quality, or performance of the locking device and security feature. You can purchase computer locks from Lenovo.

© Copyright Lenovo 2025, 2026

Security lock

Lock your computer to a desk, table, or other fixtures through a security lock.

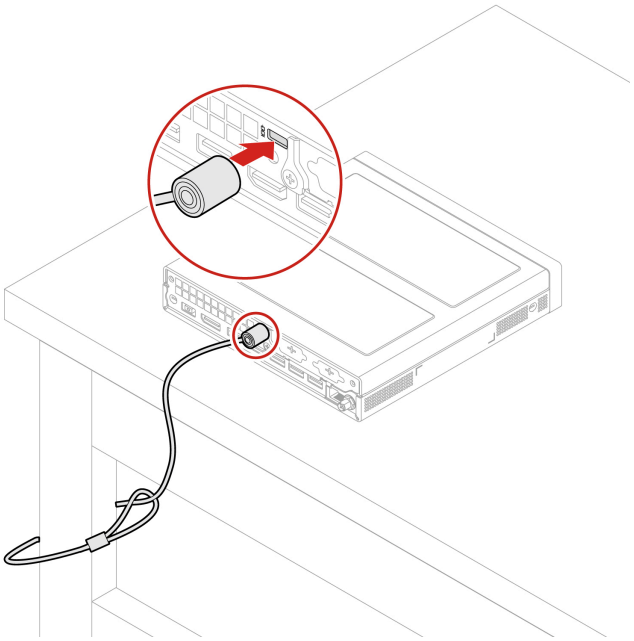

Use software security solutions

The following software solutions help secure your computer and information.

- **Windows Security**

  Windows Security is a software built-in to the operating system. It continually scans for malicious software, viruses, and other security threats. Besides, Windows updates are downloaded automatically to help keep your computer safe. Windows Security also enables you to manage tools including firewall, account protection, application and browser control, and so on.

- **Antivirus programs (for selected models)**

  Lenovo preinstalls a full-version antivirus software on selected models of computer. It helps defend the computer against viruses, safeguard your identity, and keep your personal information secured.

Note: For more information about how to use these software solutions, refer to their help systems respectively.

Use BIOS security solutions

This section provides BIOS solutions to secure your computer and information.

Wipe the storage drive data (for selected models)

It is recommended that you wipe the storage drive data before recycling the storage drive or the computer.

To wipe the storage drive data:

1. Restart the computer. When the logo screen is displayed, press F1 or Fn+F1.
2. Select **Security → secure wipe → Enabled**.
3. Press F10 or Fn+F10 to save the changes and exit.
4. Restart the computer. When the logo screen is displayed, press F12 or Fn+F12.

5. Select **App Menu → secure wipe** and press Enter.
6. Select the storage drive you will wipe and click **NEXT**.
7. Select the entire storage drive or partition to wipe as desired.
8. Select the method as desired and click **NEXT**.
9. Click **Yes** to confirm your option when the prompting window is displayed.
10. If you have set a hard disk password for the storage drive, enter the password. Otherwise, set a temporary password following the on-screen instructions. Then, click **NEXT**. The wiping process begins.

    Note: Duration of the wiping process varies depending on the storage drive capacity.
11. Click **Reboot** when you are prompted to reset the system, and then one of the following will happen:
    - If the system storage drive data is wiped, you will be prompted that no operating system is found.
    - If the non-system storage drive data is wiped, the computer restarts automatically.

Cover presence switch

The cover presence switch prevents the computer from logging in to the operating system when the computer cover is not properly installed or closed.

To enable or disable the cover presence switch on the system board:

1. Restart the computer. When the logo screen is displayed, press F1 or Fn+F1.
2. Select **Security → Cover Tamper Detected** and press Enter.
3. Select **Enabled** or **Disabled** and press Enter.
4. Press F10 or Fn+F10 to save the changes and exit.

If the cover presence switch is enabled and the computer cover is not correctly installed or closed, an error message will be displayed when you turn on the computer. To bypass the error message and log in to the operating system:

1. Properly install or close the computer cover.
2. Enter the BIOS menu, save and then exit.

Intel BIOS guard

The Intel® BIOS Guard module cryptographically verifies all BIOS updates. This hardware-based security helps prevent software and malware attacks on the computers BIOS.

Smart USB Protection

The Smart USB Protection function is a security function that helps prevent data from being copied from the computer to USB storage devices connected to the computer. You can set the Smart USB Protection function to one of the following modes:

- **Disabled** (default setting): You can use the USB storage devices without limitation.
- **Read Only**: You cannot copy data from the computer to the USB storage devices. However, you can access data on the USB storage devices.
- **No Access**: You cannot access the USB storage devices from the computer.

To configure the Smart USB Protection function:

1. Restart the computer. When the logo screen is displayed, press F1 or Fn+F1.
2. Select **Security → Smart USB Protection** and press Enter.
3. Select the desired setting and press Enter.

4. Press F10 or Fn+F10 to save the changes and exit.

Absolute Persistence (for computers purchased outside mainland China)

Absolute Persistence technology is embedded in BIOS. It detects changes that happen on the hardware, software, or the call-in location. It keeps you always knowing what condition the computer is in. To activate the technology, you have to purchase a subscription to Absolute.

UEFI BIOS passwords

You can set passwords in UEFI (Unified Extensible Firmware Interface) BIOS (Basic Input/Output System) to strengthen the security of your computer.

Password types

You can set a power-on password, supervisor password, system management password, or hard disk password in UEFI BIOS to prevent unauthorized access to your computer. However, you are not prompted to enter any UEFI BIOS password when your computer resumes from sleep mode.

- Power-on password

  When a power-on password is set, you are prompted to enter a valid password each time the computer is turned on.

- Supervisor password

  Setting a supervisor password deters unauthorized users from changing configuration settings. If you are responsible for maintaining the configuration settings of several computers, you might want to set a supervisor password.

  When a supervisor password is set, you are prompted to enter a valid password each time you try to enter the BIOS menu.

  If both the power-on password and supervisor password are set, you can enter either password. However, you must use your supervisor password to change any configuration settings.

- Hard disk password (for selected models)

  Setting a hard disk password prevents unauthorized access to the data on the storage drive. When a hard disk password is set, you are prompted to enter a valid password each time you try to access the storage drive.

  Note: After you set a hard disk password, your data on the storage drive is protected even if the storage drive is removed from one computer and installed in another.

- System management password (for selected models)

  You can enable the system management password to have the same authority as the supervisor password to control security related features. To customize the authority of the system management password through the UEFI BIOS menu:

  1. Restart the computer. When the logo screen is displayed, press F1 or Fn+F1.
  2. Select **Security** → **System Management Password Access Control**.
  3. Follow the on-screen instructions.

  If you have set both the supervisor password and the system management password, the supervisor password overrides the system management password.

Set, change, and remove a password

Before you start, print these instructions.

1. Restart the computer. When the logo screen is displayed, press F1 or Fn+F1.
2. Select **Security**.

3. Depending on the password type, select **Set Supervisor Password**, **Set Power-On Password**, **Set System Management Password**, or **Hard Disk Password** and press Enter.
4. Follow the on-screen instructions to set, change, or remove a password.
5. Press F10 or Fn+F10 to save the changes and exit.

You should record your passwords and store them in a safe place. If you forget the passwords, contact a Lenovo-authorized service provider.

Note: If the hard disk password is forgotten, Lenovo cannot remove the password or recover data from the storage drive.

Chapter 4. UEFI BIOS

UEFI BIOS is the first program that the computer runs. When the computer turns on, the UEFI BIOS performs a self test to make sure that various devices in the computer are functioning properly.

Enter the UEFI BIOS menu

Turn on or restart the computer. When the logo screen is displayed, press F1 or Fn+F1 to enter the UEFI BIOS menu.

Note: If you have set UEFI BIOS passwords, enter the correct passwords when prompted. You also can select **No** or press Esc to skip the password prompt and enter the UEFI BIOS menu. However, you cannot change the system configurations that are protected by passwords.

Navigate the UEFI BIOS menu

Follow the on-screen instructions to navigate in the UEFI BIOS menu.

The table below introduces the available settings of the UEFI BIOS menu. You can follow the on-screen instruction to navigate in the UEFI BIOS menu.

Note: The UEFI BIOS menu might vary depending on system configurations.

Menu	Introduction
Main	This category provides the general product-related and firmware information including system summary, machine type, product serial number, UUID number, etc.
Devices	This category introduces how to configure various devices such as USB ports and audio controllers.
Advanced	This category provides advanced information about the computer such as the CPU features.
Power	This category introduces power and thermal management solutions.
Security	This category introduces various passwords, locks, and software to protect your computer.
Startup	This category introduces how to set the boot priority order.
Exit	This category introduces how to exit as you prefer.

You can go to Lenovo BIOS Simulator Center https://download.lenovo.com/bsco/index.html to explore the detailed settings by your product name.

Note: The Lenovo BIOS Simulator Center makes periodic updates of the settings. The UEFI BIOS simulator interface and description of settings might be different from that on your actual user interface.

Map UEFI BIOS USB ports to physical connectors

If you need to enable or disable any front or rear USB port UEFI BIOS, refer to below table to locate the corresponding USB port on your computer. You can find the settings in the UEFI BIOS menu (**Devices → USB Setup**):

© Copyright Lenovo 2025, 2026

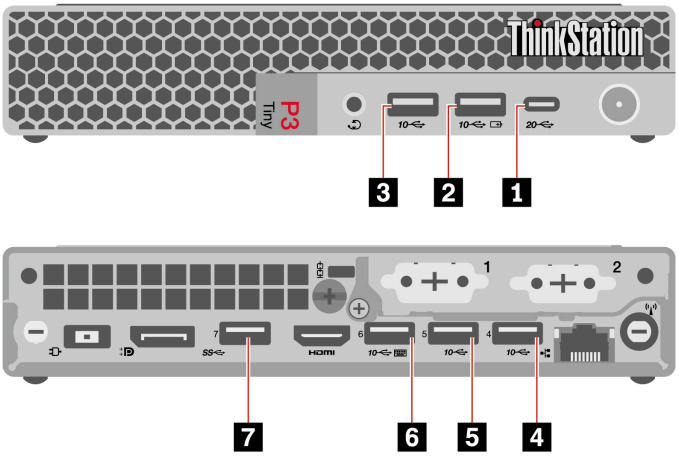

USB connector on computer	USB port in UEFI BIOS
1	USB Port 1
2	USB Port 2
3	USB Port 3
4	USB Port 4
5	USB Port 5
6	USB Port 6
7	USB Port 7

Update the UEFI BIOS

When you install a new program, device driver, or hardware component, you might need to update the UEFI BIOS.

Download and install the latest UEFI BIOS update package by one of the following methods:

From the Vantage app

Follow the instructions to update the UEFI BIOS from the Vantage app.

Step 1. Open the Vantage app, and then click **Device → System Update**.

Step 2. If the latest UEFI BIOS update package is available, follow the on-screen instructions to download and install the package.

From the Lenovo Support Web site

Follow the instructions to update the UEFI BIOS from the Lenovo Support Web site.

Step 1. Go to https://pcsupport.lenovo.com and select the entry for your computer.

Step 2. Click **Drivers & Software → Manual Update → BIOS/UEFI**.

Step 3. Follow the on-screen instructions to download and install the latest UEFI BIOS update package.

From the Windows Update

Follow the instructions to update the UEFI BIOS from the Windows Update.

Step 1. Type `Settings` in the Windows search box and press Enter.

Step 2. Click **Windows Update → Check for Updates**.

Step 3. If a BIOS update package appears in your update list, click **Download or Install** to initiate the update.

Remote update via Windows Remote Desktop

Step 1. Establish a Remote Desktop Protocol (RDP) connection to the target computer.

Step 2. Through the RDP interface, remotely update the UEFI BIOS using one of the following methods:

- “From the Vantage app” on page 16
- “From the Lenovo Support Web site” on page 16
- “From the Windows Update” on page 17

Step 3. After installation, the system will automatically reboot multiple times (around 20 minutes). The remote connection will terminate during reboots — reconnect after the final reboot to verify successful update.

Chapter 5. RAID

What is RAID

Redundant Array of Independent Disks (RAID) is a technology that provides increased storage functions and reliability through redundancy. It also can improve data storage reliability and fault tolerance compared with single-drive storage systems. Data loss resulting from a drive failure can be prevented by reconstructing missing data from the remaining drives.

When a group of independent physical storage drives is set up to use RAID technology, they are in a RAID array. This array distributes data across multiple storage drives, but the array appears to the host computer as one single storage unit. Creating and using RAID arrays provides high performance, such as the expedited I/O performance, because several drives can be accessed simultaneously.

RAID Level

Your computer must have the minimum number of solid-state drives installed for the supported level of RAID below:

- RAID 0: striped disk array
  - Consists of at least two solid-state drives
  - Supported strip size: 4 KB, 8 KB, 16 KB, 32 KB, 64 KB, or 128 KB
  - Better performance without fault tolerance
- RAID 1: mirrored disk array
  - Consists of two solid-state drives
  - Improved reading performance and 100% redundancy
- RAID 5: block-level striped disk array with distributed parity
  - Consists of at least three solid-state drives
  - Supported strip size: 16 KB, 32 KB, 64 KB, or 128 KB
  - Better performance and fault tolerance

Configure the system BIOS to enable NVMe RAID functionality

To enable NVMe RAID functionality:

1. Restart the computer. When the logo screen is displayed, press F1 or Fn+F1.
2. Select **Devices → Storage Setup** and press Enter.
3. Select **Configure Storage as** and press Enter.
4. Select **RAID** and press Enter.
5. Press F10 or Fn+F10 to save the changes and exit.

Configure RAID in UEFI mode

This section provides instructions on how to configure RAID in UEFI mode.

© Copyright Lenovo 2025, 2026

Create RAID volumes in UEFI mode

Attention: All the existing data stored on the selected drives will be erased while the RAID volume is being created.

To create RAID volumes:

1. Restart the computer. When the logo screen is displayed, press F1 or Fn+F1.
2. Select **Devices → Storage Setup** and press Enter.
3. Select **Intel (R) Rapid Storage Technology** and press Enter.
4. Select **Create RAID Volume** and press Enter.
5. Select **Name** and press Enter. When prompted, type a proper RAID Volume name in the field.
6. Select **RAID Level** and press Enter. When prompted, select a RAID level in the field.
7. Use the arrow keys and the space key to mark individual physical storage drives to be added in the RAID volume.
8. Select **Strip Size** and press Enter. When prompted, select a strip size in the field.
9. Select **Capacity** and type a volume size in the field.
10. Select **Create Volume** and press Enter to initiate volume creation.

Delete RAID volumes in UEFI mode

Attention: All the existing data stored on the selected drives will be erased after you delete RAID volumes.

To delete RAID volumes:

1. Restart the computer. When the logo screen is displayed, press F1 or Fn+F1.
2. Select **Devices → Storage Setup** and press Enter.
3. Select **Intel (R) Rapid Storage Technology** and press Enter.
4. Select the RAID volume to be deleted and press Enter.
5. Select **Delete** and press Enter.
6. Select **Yes** to confirm the deletion of the selected RAID volume. Deleting a RAID volume will reset the storage drives to non-RAID.

Reset storage drives to non-RAID in UEFI mode

To reset your storage drives to non-RAID:

1. Restart the computer. When the logo screen is displayed, press F1 or Fn+F1.
2. Select **Devices → Storage Setup** and press Enter.
3. Select **Intel (R) Rapid Storage Technology** and press Enter.
4. Select the RAID volumes and press Enter to view the detailed information. Select the storage drives you want to reset to non-RAID and then press Enter.
5. Select **Reset to Non-RAID** and press Enter.
6. Select **Yes** to reset the storage drives to non-RAID.

Chapter 6. CRU replacement

Before CRU replacement

Before replacing the hardware of your computer, read this section first. You will get to know what CRU is, the CRU list, system board connectors, and prerequisites for CRU replacement.

What is CRU

Customer Replaceable Units (CRUs) are parts that can be replaced by customers. Lenovo computers contain the following types of CRUs:

- **Self-service CRUs:** Refer to parts that can be replaced easily by customers themselves or by trained service technicians at an additional cost.
- **Optional-service CRUs:** Refer to parts that can be replaced by customers with a greater skill level. Trained service technicians can also provide service to replace the parts under the type of warranty designated for the customer's machine.

If you intend on installing the CRU, Lenovo will ship the CRU to you. CRU information and replacement instructions are shipped with your product and are available from Lenovo at any time upon request. You might be required to return the defective part that is replaced by the CRU. When return is required: (1) return instructions, a prepaid shipping label, and a container will be included with the replacement CRU; and (2) you might be charged for the replacement CRU if Lenovo does not receive the defective CRU within thirty (30) days of your receipt of the replacement CRU. For full details, see the Lenovo Limited Warranty documentation at:
https://www.lenovo.com/warranty/llw_02

CRU list

The following is the CRU list of your computer.

Self-service CRUs

- ac power adapter
- Bottom cover
- Dongle*
- Dust filter*
- Top cover
- I/O bracket*
- External Wi-Fi antenna*
- Four-port serial card cable*
- Keyboard*
- M.2 solid-state drive
- M.2 solid-state drive clip
- Memory module
- Mouse*
- Power cord
- Thumb screw

© Copyright Lenovo 2025, 2026

- Vertical stand*
- VESA® mount bracket*

Optional-service CRUs

- Board to board module*
- Graphics card heat sink*
- PCIe card*
- PCIe converter*
- System fan and heat sink
- Internal speaker

* for selected models

System board illustration

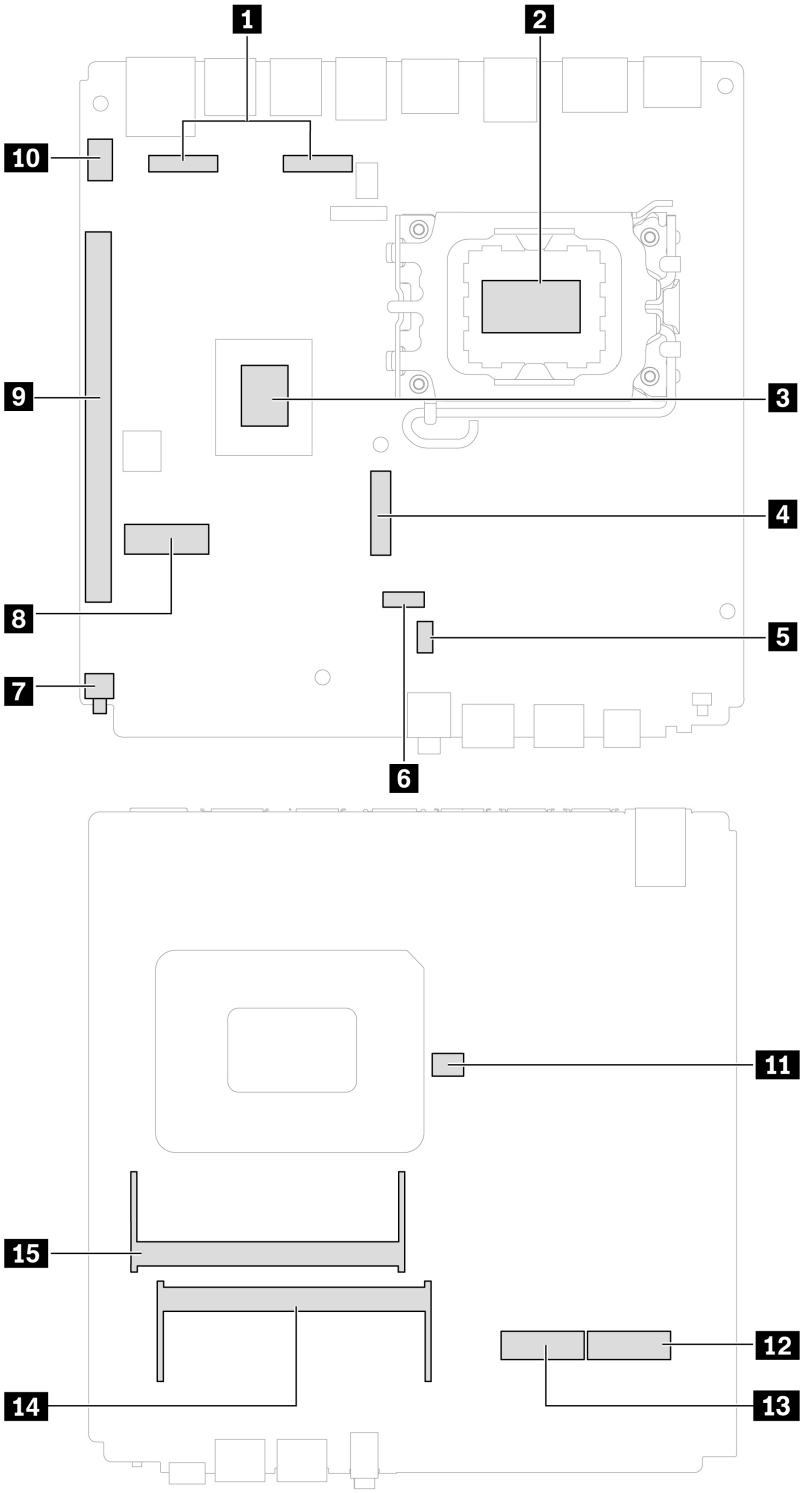

Connector	Connector
1 I/O board connector	2 Microprocessor socket
3 PCH	4 Gen 5 M.2 solid-state drive slot (SSD1)

Connector	Connector
5 Internal speaker connector	6 System fan connector
7 Cover presence switch connector	8 M.2 Wi-Fi card slot
9 PCIe slot	10 Clear CMOS
11 Coin-cell battery connector	12 M.2 solid-state drive slot (SSD2)
13 M.2 solid-state drive slot (SSD3)	14 Memory slot (DIMM1)
15 Memory slot (DIMM2)	

Prerequisites for hardware replacement

General prerequisites

Read *Generic Safety and Compliance Notices*.

Prerequisites for opening computer cover

During operation, some components become hot enough to burn the skin. Before you open the computer cover, do the following:

- Turn off the computer and remove all connected devices and cables.
- Disconnect the computer from ac power and all connected cables.
- Unlock any locking device that secures the cover.
- Wait approximately 10 minutes until the computer is cool.

remove any media from the drives, turn off the computer and remove all connected devices and cables., disconnect power, remove all cables and locking devices, and

Prerequisites for M.2 solid-state drive replacement

Attention: The M.2 solid-state drive is sensitive. Inappropriate handling might cause damage and permanent loss of data. When handling the M.2 solid-state drive, observe the following guidelines:

- Replace the M.2 solid-state drive only for upgrade or repair. The M.2 solid-state drive is not designed for frequent changes or replacement.
- Before replacing the M.2 solid-state drive, make a backup copy of all the data that you want to keep.
- Do not touch the contact edge of the M.2 solid-state drive. Otherwise, the M.2 solid-state drive might get damaged.
- Do not apply pressure to the M.2 solid-state drive.
- Do not make the M.2 solid-state drive subject to physical shocks or vibration. Put the M.2 solid-state drive on a soft material, such as cloth, to absorb physical shocks.

Prerequisites for heat sink replacement

The heat sink might be very hot. Before you open the top cover, turn off the computer and wait several minutes until the computer is cool.

Notes:

- Carefully remove the following screws from the system board to avoid any possible damage to the system board. The screws cannot be removed from the heat sink.
- You might have to gently twist the heat sink to free it from the microprocessor.
- Do not touch the thermal grease while handling the heat sink.

Power adapter and power cord

Before you start, ensure that you have read “Prerequisite for CRU replacement” on page 23.

For access, do the following:

1. Turn off the computer and remove all connected devices and cables.
2. Disconnect the computer from ac power and all connected cables.

Removal steps

1. Remove the power adapter and power cord from the chassis.

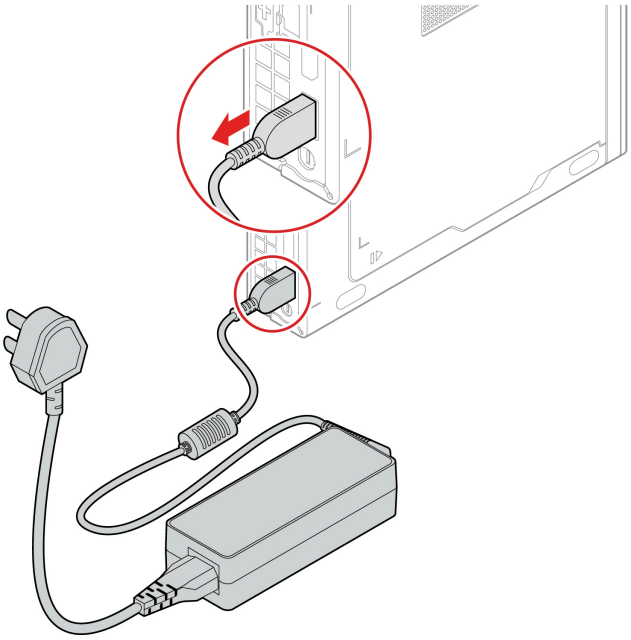

2. Remove the power cord.

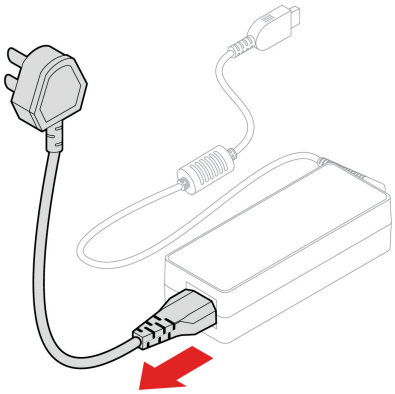

VESA mount bracket

Before you start, ensure that you have read “Prerequisite for CRU replacement” on page 23.

For access, do the following:

1. Turn off the computer and remove all connected devices and cables.
2. Disconnect the computer from ac power and all connected cables.

Removal steps

1. Remove the two screws which secure the VESA mount bracket to the chassis. Find screw specification in the following screw table.

Screw	Quantity	Torque
M3 × L6, flat-head	2	5 ± 0.5 in-lb

2. Slide the VESA mount bracket to remove it.

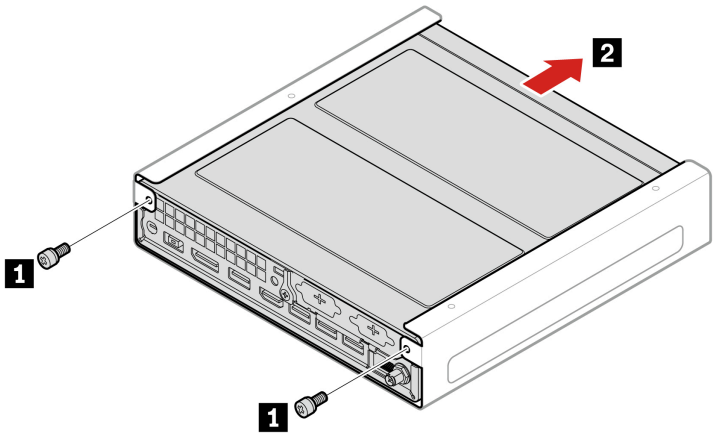

Vertical stand

Before you start, ensure that you have read “Prerequisite for CRU replacement” on page 23.

For access, do the following:

1. Turn off the computer and remove all connected devices and cables.

2. Disconnect the computer from ac power and all connected cables.

Removal steps

Lift the chassis to remove it from the vertical stand.

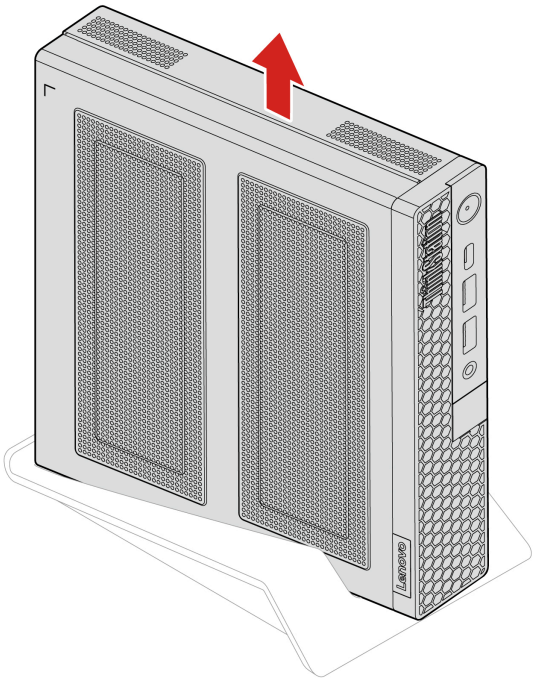

External Wi-Fi antenna

Before you start, ensure that you have read “Prerequisite for CRU replacement” on page 23.

For access, do the following:

1. Turn off the computer and remove all connected devices and cables.
2. Disconnect the computer from ac power and all connected cables.

Removal steps

Contrarotate the external Wi-Fi antenna until it’s released from the chassis.

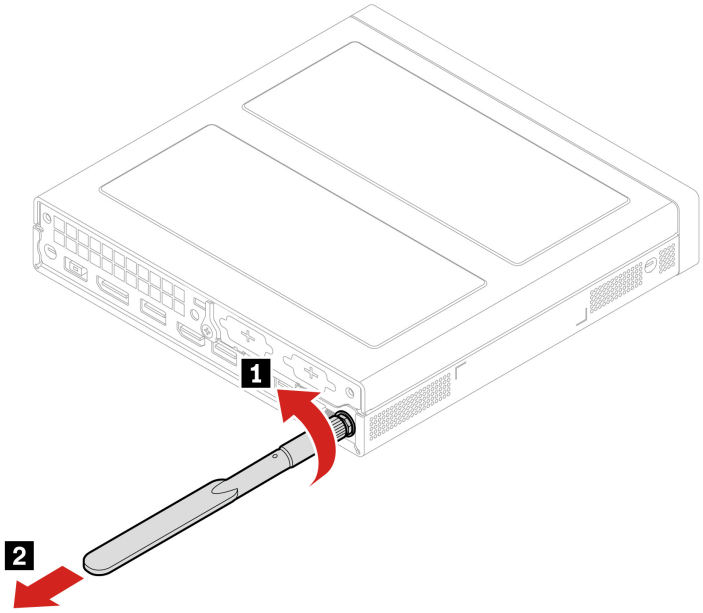

Dust filter

Before you start, ensure that you have read “Prerequisite for CRU replacement” on page 23.

Removal steps

Pull to remove the dust filter from the front cover.

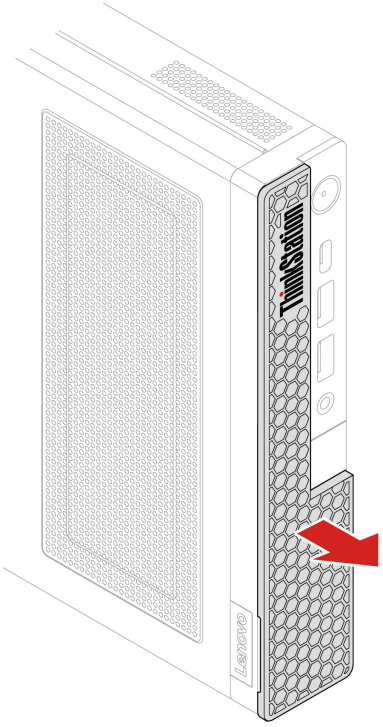

Top cover and front cover

Before you start, ensure that you have read “Prerequisite for CRU replacement” on page 23.

For access, remove these parts, if any:

- “VESA mount bracket” on page 25
- “Vertical stand” on page 25
- “External Wi-Fi antenna” on page 26
- “Dust filter” on page 27

Removal steps

1. Remove the screw which secure the top cover to the chassis. Find screw specification in the following screw table.

Screw	Quantity	Torque
M4 × L5, flat-head	1	3 ± 0.5 in-lb

2. Lift the top cover and front cover.

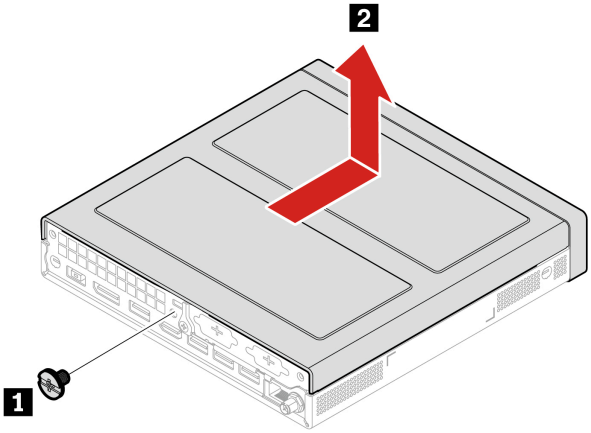

Bottom cover

Before you start, ensure that you have read “Prerequisite for CRU replacement” on page 23.

For access, do the following:

- Remove the top cover. See “Top cover” on page 28.
- Turn over the computer so that the bottom cover is facing up.

Replacement steps

Removal steps

Slide the bottom cover towards the front panel to remove it from the chassis.

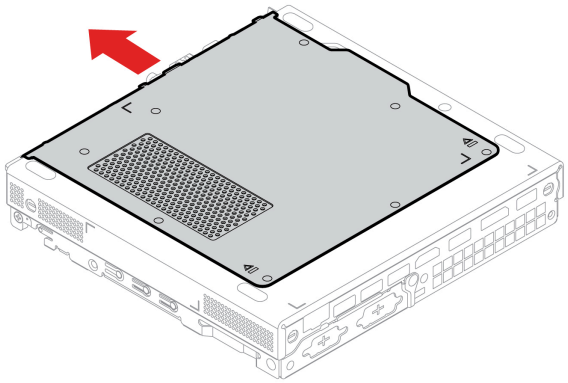

Installation steps

1. Align the three hooks on the bottom cover with the holes on the chassis.
2. Slide the bottom cover towards the rear panel until it's clicked into place.

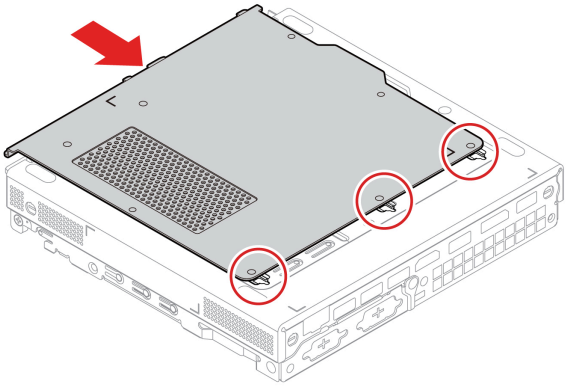

I/O bracket

Before you start, ensure that you have read "Prerequisite for CRU replacement" on page 23.

For access, remove the top cover. See "Top cover" on page 28.

Removal steps

1. Remove the two screws which secure the I/O bracket to the chassis. Find screw specification in the following screw table.

Screw	Quantity	Torque
M3 × L4, countersunk	2	3 ± 0.5 in-lb

2. Remove the I/O bracket.

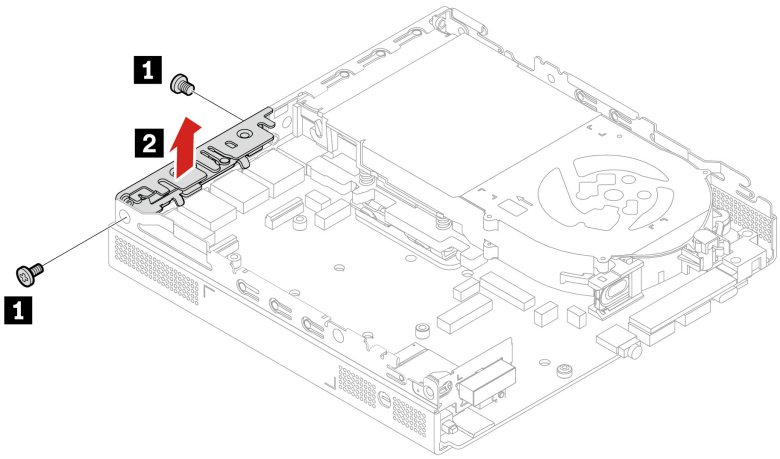

M.2 solid-state drive

Before you start, ensure that you have read “Prerequisite for CRU replacement” on page 23.

For access, remove the following parts:

- “Top cover” on page 28
- “Bottom cover” on page 28

Note: Ensure that you follow the installation order for M.2 solid-state drives shown in the following illustration.

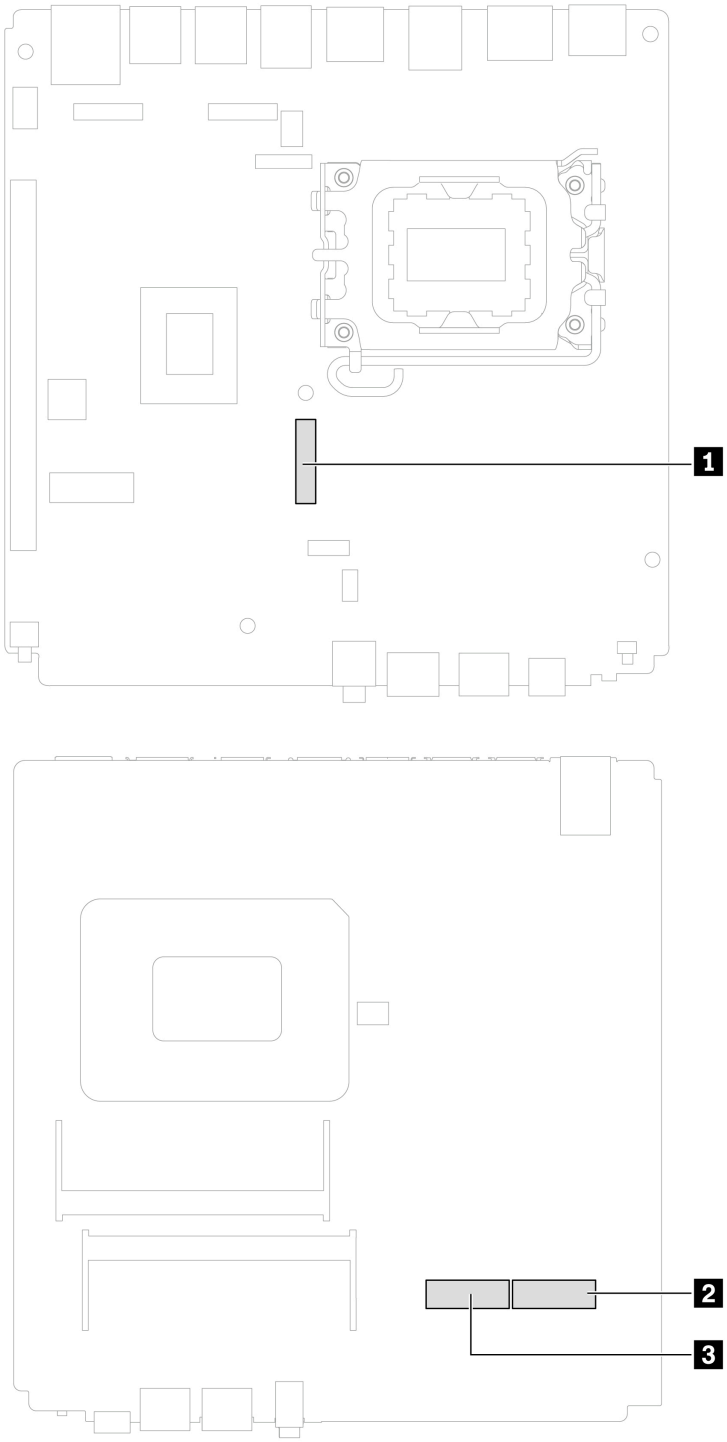

Removal steps for M.2 solid-state drive in slot 1

1. Contrarotate the clip to release the M.2 solid-state drive.
2. Pull the M.2 solid-state drive out of the slot.

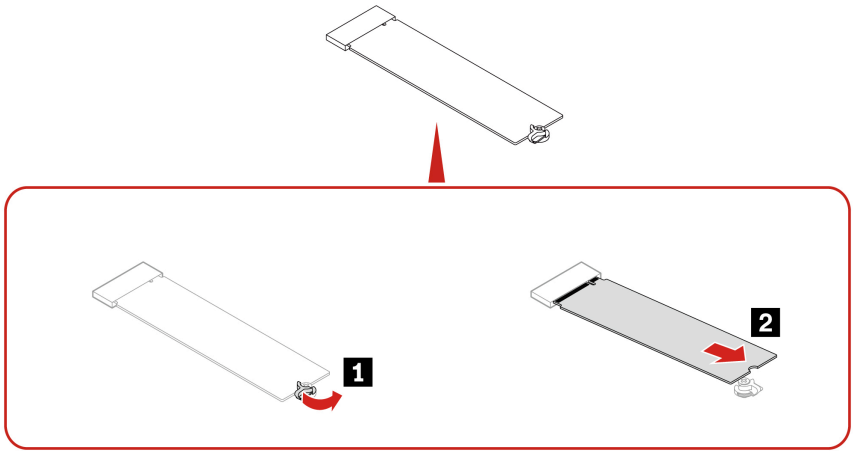

Removal steps for M.2 solid-state drive in slot 2 and slot 3

Open the clip and remove the M.2 solid-state drive from the slot.

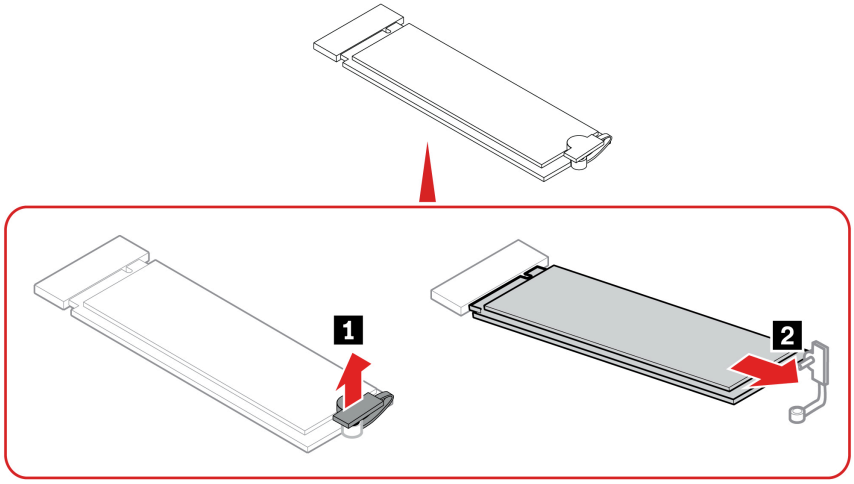

Memory module

Before you start, ensure that you have read “Prerequisite for CRU replacement” on page 23.

Notes:

- To remove or install the memory module, wait at least 20 seconds after disconnecting power cords from the system. It allows the system to be completely discharged of electricity.
- Ensure that you follow the installation order for memory modules shown in the following illustration.

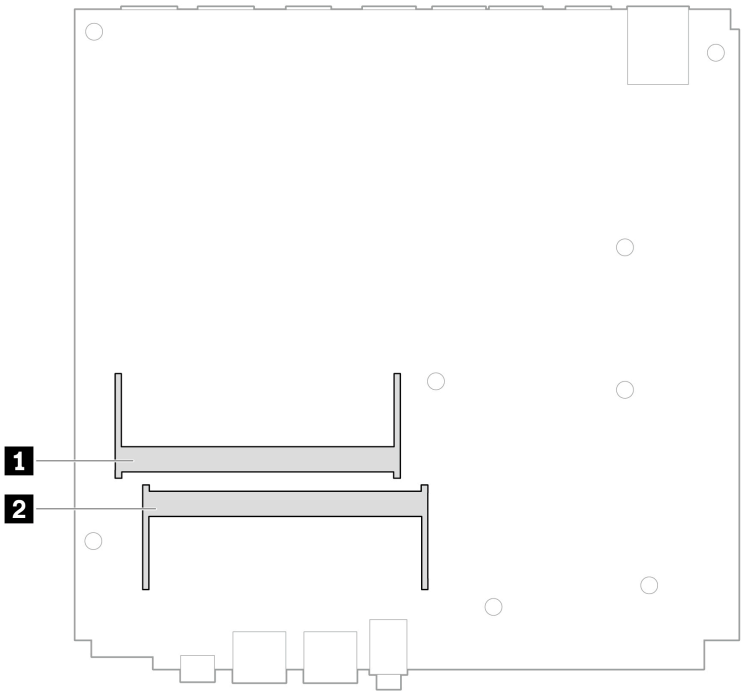

For access, remove the following parts in order:

- “Top cover” on page 28
- “Bottom cover” on page 28

Removal steps

1. Open the latches on both sides to release the memory module.

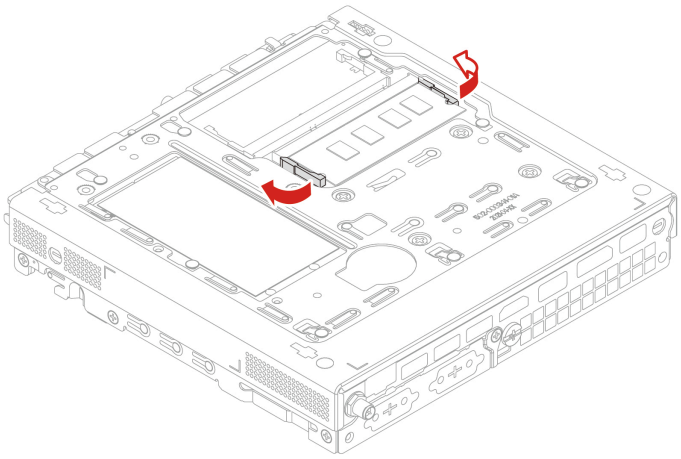

2. Pull the memory module out of the slot.

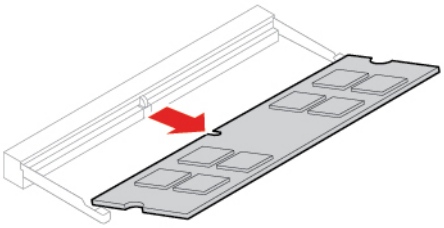

Internal speaker

Before you start, ensure that you have read “Prerequisite for CRU replacement” on page 23.

For access, do the following:

1. For access, remove the top cover. See “Top cover” on page 28.
2. Disconnect the internal speaker cable from the internal speaker connector on the system board.

Removal steps for type 1 internal speaker

Push the internal speaker outward and pull horizontally to remove it.

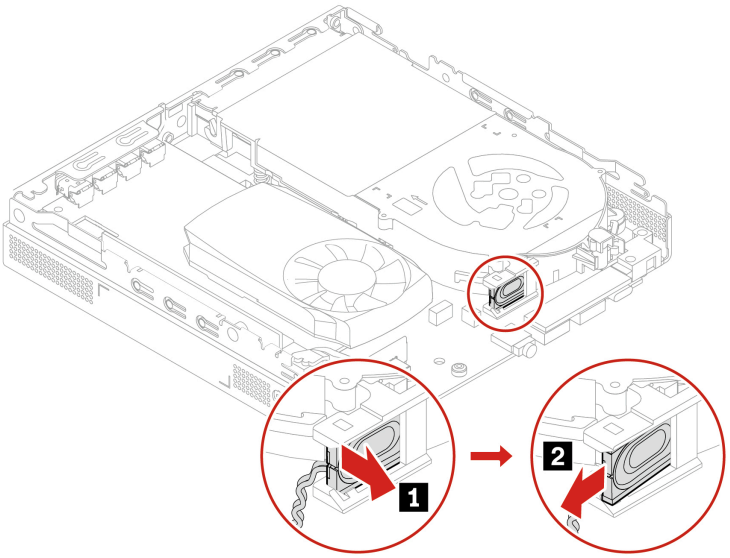

Removal steps for type 2 internal speaker

Push the internal speaker outward and pull horizontally to remove it.

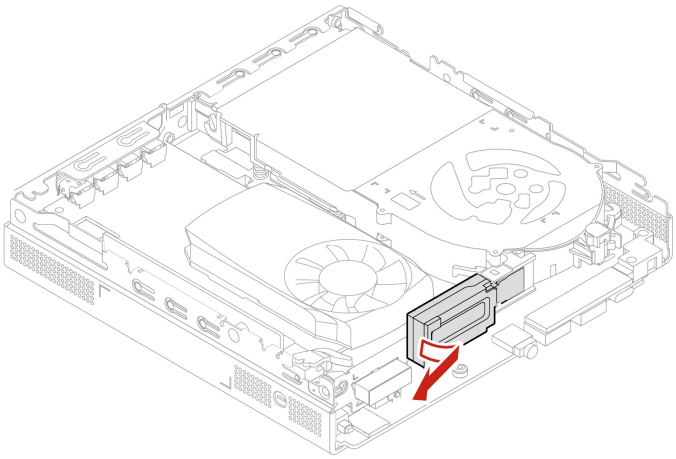

System fan

Before you start, ensure that you have read “Prerequisite for CRU replacement” on page 23.

For access, do the following:

1. Remove the top cover. See “Top cover” on page 28.
2. Remove the internal speaker. See “Internal speaker” on page 34.
3. Disconnect the system fan cable from the system board.

Replacement steps

Removal steps

Lift the system fan to remove it.

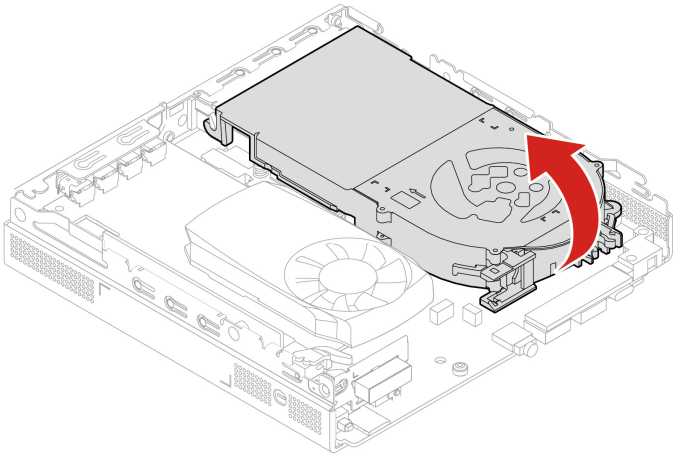

Installation steps

Align the hooks of the system fan with the tabs on the heat sink and mount the system fan on the heat sink.

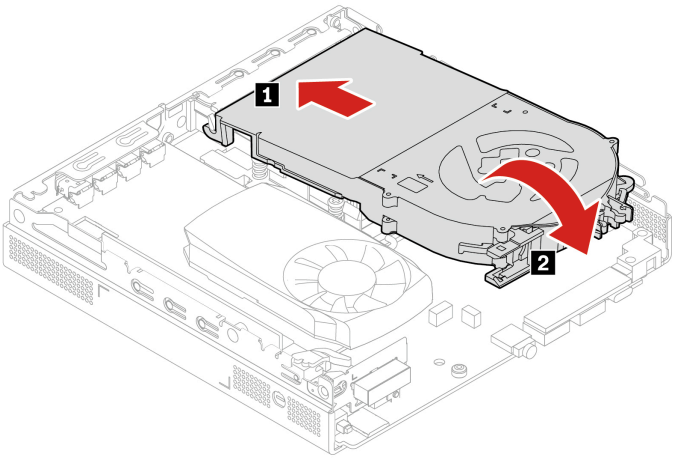

Heat sink

Prerequisite

Before you start, read *Generic Safety and Compliance Notices*, and print the following instructions.

For access, remove the following parts in order:

- “Top cover” on page 28
- “Internal speaker” on page 34
- “System fan” on page 35

Removal steps

1. Remove the four screws which secure the heat sink to the system board. Find screw specification in the following screw table.

Screw	Quantity	Torque
M3 × L7, flat-head	4	3 ± 0.5 in-lb

2. Lift the heat sink.

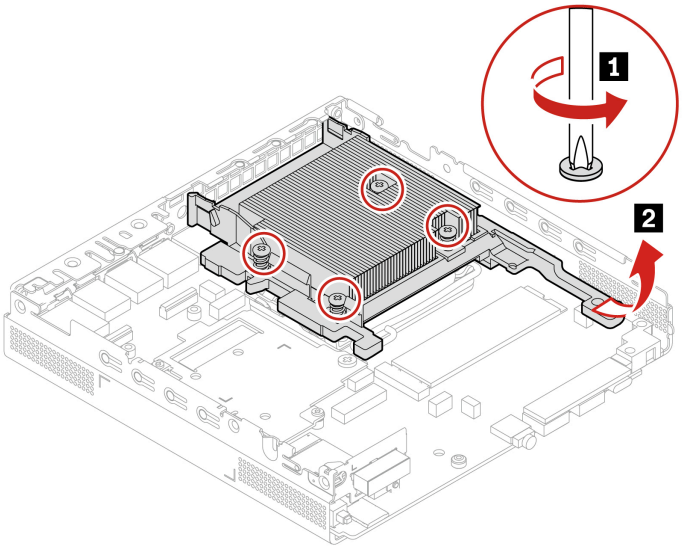

PCIe card and PCIe converter

Before you start, ensure that you have read “Prerequisite for CRU replacement” on page 23.

For access, remove the top cover, see “Top cover” on page 28.

Removal steps

1. Remove the three screws which secure the PCIe card and PCIe converter to the chassis. Find screw specification in the following screw table.

Screw	Quantity	Torque
M3 × L4, countersunk	2	3 ± 0.5 in-lb
M3 × L6.8, countersunk	1	3 ± 0.5 in-lb

2. Remove the PCIe card and PCIe converter.

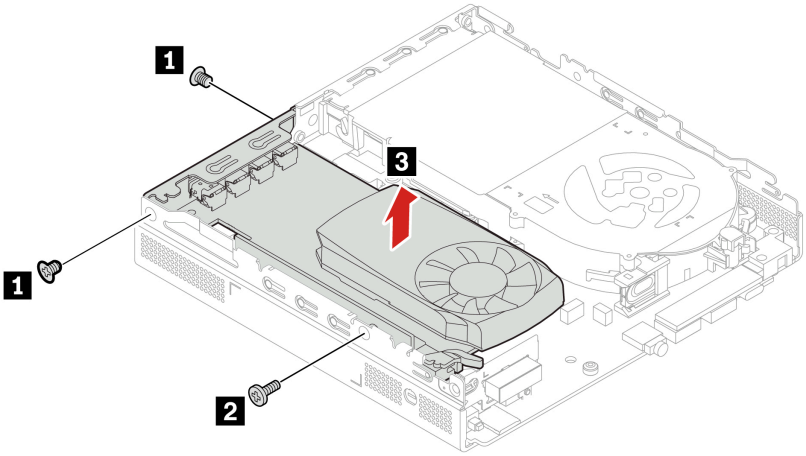

3. Open the clip and pull the PCIe card out of the PCIe converter slot.

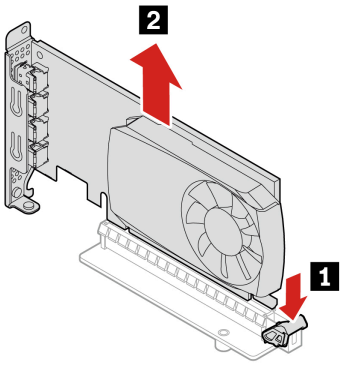

Graphics card heat sink

Some graphics cards include an integrated heat sink. Prior to the card replacement, you need to remove the heat sink.

Before you start, ensure that you have read “Prerequisite for CRU replacement” on page 23.

For access, remove the following parts in order:

- “Top cover” on page 28
- “PCIe card and PCIe converter” on page 37

Removal steps

1. Remove the four screws which secure heat sink to the graphics card. Find screw specification in the following screw table.

Screw	Quantity	Torque
M2 × L3, flat head	4	3 ± 0.5 in-lb

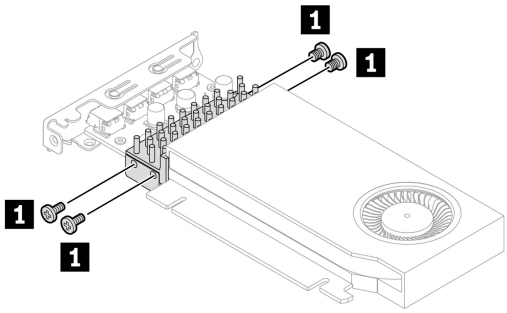

2. Remove the heat sink from the graphics card.

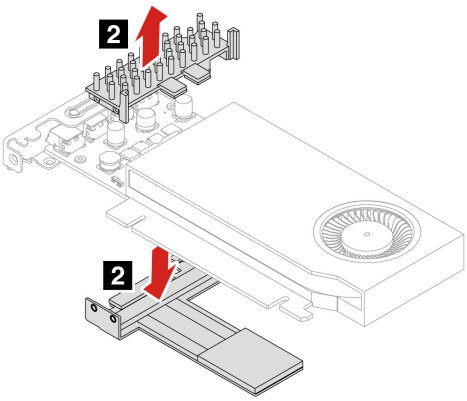

Note: Before installing the graphics card, verify that the necessary heat sink is properly mounted.

Board to board module

Before you start, ensure that you have read “Prerequisite for CRU replacement” on page 23.

For access, do the follow

1. Remove the top cover, see “Top cover” on page 28.
2. Disconnect the board to board module cable from the system board.

Removal steps for type 1 board to board module

1. Remove the screw which secures the board to board module to the chassis. Find screw specification in the following screw table.

Screw	Quantity	Torque
M3 × L4, countersunk	1	3 ± 0.5 in-lb

2. Remove the screw which secures the board to board module to the system board. Find screw specification in the following screw table.

Screw	Quantity	Torque
M3 × L3.2, cross round head	1	3 ± 0.5 in-lb

3. Remove the board to board module.

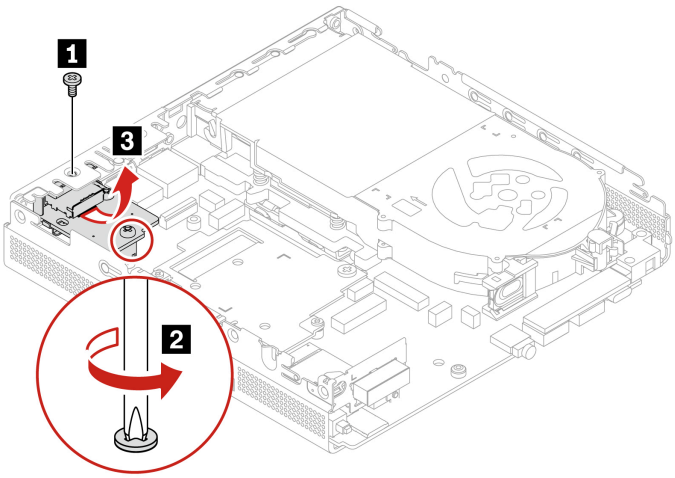

Removal steps for type 2 board to board module

1. Remove the screw which secures the board to board module to the chassis. Find screw specification in the following screw table.

Screw	Quantity	Torque
M3 × L4, countersunk	1	3 ± 0.5 in-lb

2. Remove the screw which secures the board to board module to the system board. Find screw specification in the following screw table.

Screw	Quantity	Torque
M3 × L3.2, cross round head	1	3 ± 0.5 in-lb

3. Remove the board to board module.

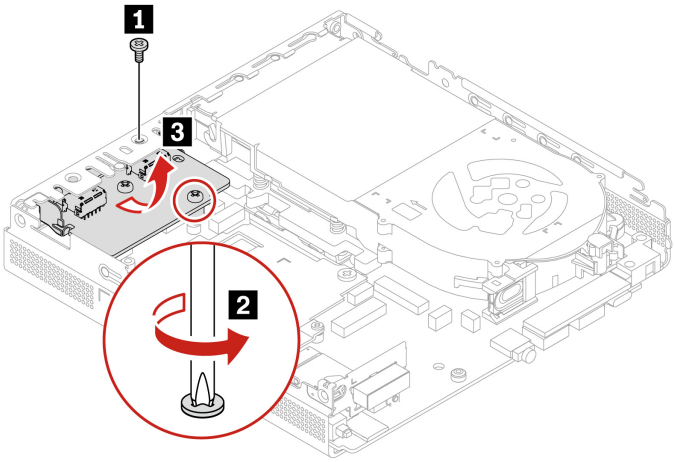

Removal steps for type 3 board to board module

1. Remove the two screws which secure the board to board module to the chassis. Find screw specification in the following screw table.

Screw	Quantity	Torque
M3 × L4, countersunk	2	3 ± 0.5 in-lb

2. Remove the screw which secures the board to board module to the system board. Find screw specification in the following screw table.

Screw	Quantity	Torque
M3 × L3.2, cross round head	1	3 ± 0.5 in-lb

3. Remove the board to board module.

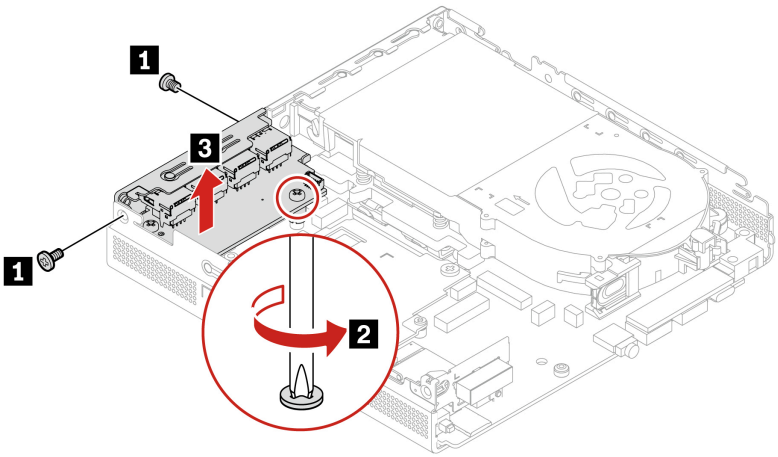

Chapter 7. Help and support

Find your serial number

This topic helps you find computer serial number.

You can find your serial number via:

- **Dashboard** or **Device** in the **Vantage** app
- Machine-type and serial-number label of your computer (shown as below illustration)

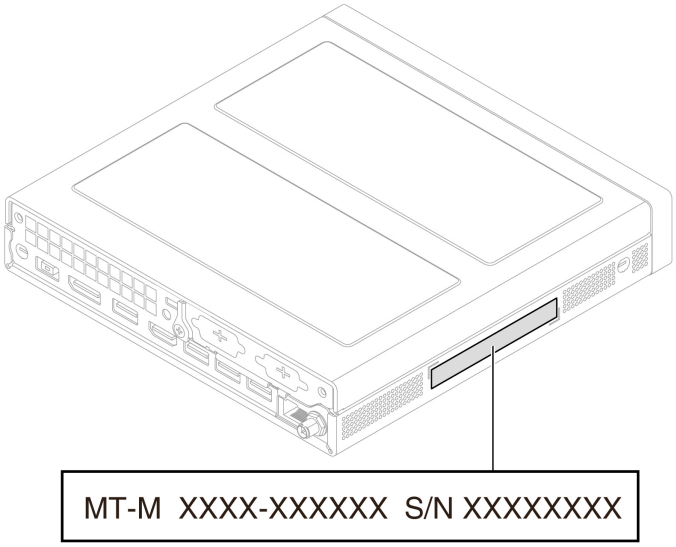

Diagnose and troubleshoot your computer

This section provides introduction to a set of diagnostics and troubleshooting tools at Lenovo Support Web site and the Vantage app. They can help you diagnose common software and hardware issues.

The following table lists these diagnostics tools and the recommended conditions for each tool.

Diagnostics tool	Recommended scenario
Troubleshoot and diagnose at Lenovo Support Web site	You want to have an online troubleshooting or scan of hardware and drivers on your computer.
Hardware scan	• Your computer is installed with the Vantage app. • You want to perform basic examinations of the hardware components.
Use ThinkStation diagnostic tool	You want to use diagnostic solutions to test hardware components and report operating-system-controlled settings that interfere with the correct operation of your computer.

© Copyright Lenovo 2025, 2026

Troubleshoot and diagnose at Lenovo Support Web site

Lenovo provides two different diagnosing solutions to help you identify and resolve problems on your computer.

Step 1. Go to https://www.pcsupport.lenovo.com/ and enter your product name in the search box.

Step 2. Click **Troubleshoot & Diagnose** and select the option that fits your need.

Notes:

- Before launching any automatic diagnosing process, a pop-up window will be prompted to install Lenovo Service Bridge. Lenovo Service Bridge helps to connect your computer with Lenovo diagnosing tools.
- Lenovo Support Web site makes periodic updates of the sections to keep improving your experience with your computer. The Web site interface and descriptions of sections might be different from that on your actual interface.

- If you are unaware of what problem your computer goes with, it is recommended that you select **Easy** and follow on-screen instructions to get your firmware updated and obtain the hardware status.
- If you have identified the problem on your computer, you can select **Custom** and follow on-screen instructions to resolve the problem.

If solutions can not resolve problems on your computer, you can follow on-screen instructions to submit an e-ticket or contact Lenovo for professional assistance.

Hardware scan

Hardware scan is an effective hardware testing tool to help you identify existing hardware issues.

To run the Hardware scan:

Step 1. Type **Vantage** in the Windows search box and then press Enter.

Step 2. Click **Hardware scan** or **Support → Hardware scan**.

Step 3. Select **QUICK SCAN** or **CUSTOMIZE** and then follow the on-screen instructions to run the hardware scan.

Notes:

- The Quick Scan tool contains a pre-selected suite of tests that performs basic examinations of the hardware components found in the system. The Customize tool enables you to select one or several hardware components to perform the examinations.
- Before selecting **QUICK SCAN**, click **Refresh Modules** to ensure that the list of hardware components is the components currently available for the computer.

Step 4. If any hardware failure is detected, the result varies depending on the warranty status and varies by country or region. Follow the on-screen instructions to resolve the issue.

Recover your Windows operating system

When you encounter some unexpected issues with your operating system, you can choose to recover your operating system by yourself or call Lenovo Customer Support Center.

Note: Microsoft constantly makes updates to the Windows operating system. Before installing a particular Windows version, check the compatibility list for the Windows version. For details, go to https://support.lenovo.com/us/en/solutions/ht512575.

To recover your operating system to...	See.
Factory defaults	Refer to the instructions in https://support.lenovo.com/HowToCreateLenovoRecovery
A previous system point	Refer to the instructions in Popular Topics: https://support.lenovo.com/solutions/ht118590

Call Lenovo

If you have tried to correct the problem yourself and still need help, you can call Lenovo Customer Support Center.

Before you contact Lenovo

Prepare the needed information before you contact Lenovo.

1. Record the problem symptoms and details:
   - What is the problem? Is it continuous or intermittent?
   - Any error message or error code?
   - What operating system are you using? Which version?
   - Which software applications were running at the time of the problem?
   - Can the problem be reproduced? If so, how?
2. Record the system information:
   - Product name.
   - Machine type and “serial number” on page 42.

Lenovo Customer Support Center

During the warranty period, you can call Lenovo Customer Support Center for help.

Telephone numbers

For a list of the Lenovo Support phone numbers for your country or region, go to: https://pcsupport.lenovo.com/supportphonelist

Note: Phone numbers are subject to change without notice. If the number for your country or region is not provided, contact your Lenovo reseller or Lenovo marketing representative.

Self-help resources

Use the following self-help resources to learn more about the computer and troubleshoot problems.

Resources	How to access?
Lenovo Support Web Site	https://pcsupport.lenovo.com
Tips	https://www.lenovo.com/tips
Lenovo Community	https://forums.lenovo.com

Resources	How to access?
Accessibility information	https://www.lenovo.com/accessibility
Windows help information	• Open the Start menu and click **Get Help** or **Tips**. • Use Windows Search. • Microsoft support Web site: https://support.microsoft.com

Purchase accessories or additional services

This topic provides instructions on how to purchase accessories or additional services.

Accessories

Lenovo has a number of hardware accessories and upgrades to help expand the functionalities of your computer. Accessories include memory modules, storage devices, network cards, power adapters, keyboards, mice, and so on.

To shop at Lenovo, go to https://www.lenovo.com/accessories.

Additional services

During and after the warranty period, you can purchase additional services from Lenovo at https://pcsupport.lenovo.com/warrantyupgrade.

Service availability and service names might vary by country or region.

Accessibility features

Lenovo is committed to making information technology accessible to everyone, including individuals with hearing, vision, mobility, cognitive, or speech disabilities. To get the most up-to-date and detailed accessibility features information for the product, go to https://support.lenovo.com/docs/product_accessibility_features.

Appendix A. Important notice for Quebec consumers

In regard to section 79.18 of Quebec's Regulation respecting the application of the Consumer Protection Act, Lenovo in no way guarantees the availability of (a) replacement parts; (b) repair services; and (c) information necessary to maintain or repair the goods. For up-to-date information on the technical support and parts available for your purchase, please consult **https://support.lenovo.com/ca/en**.

En ce qui concerne l'article 79.18 du Règlement d'application de la Loi sur la protection du consommateur du Québec, Lenovo ne garantit en aucune façon la disponibilité des éléments suivants :(a) les pièces de rechange; (b) les services de réparation; et (c) les renseignements nécessaires à l'entretien à la réparation du bien. Pour obtenir des renseignements à jour sur le soutien technique et les pièces disponibles pour votre achat, veuillez consulter **https://support.lenovo.com/ca/fr**.

© Copyright Lenovo 2025, 2026

Appendix B. Notice for USB connector name update

The USB Implementers Forum published a revision of the guideline for USB connector names in September, 2022. Lenovo follows the revised guideline and updates USB connector names accordingly. You can refer to the table below for naming update details.

Current name	Previous name
USB-A connector (Hi-Speed USB)	USB-A 2.0 connector
USB-A connector (USB 5Gbps)	USB-A 3.2 Gen 1 connector
USB-A connector (USB 10Gbps)	USB-A 3.2 Gen 2 connector
USB-A connector (USB 5Gbps, Always On USB)	Always on USB-A 3.2 Gen 1 connector
USB-A connector (USB 10Gbps, Always On USB)	Always on USB-A 3.2 Gen 2 connector
USB-C connector (USB 5Gbps)	USB-C (3.2 Gen 1) connector
USB-C connector (USB 10Gbps)	USB-C (3.2 Gen 2) connector
USB-C connector (USB 20Gbps)	USB 3.2 Gen 2x2
USB-C connector (USB4 20Gbps)	USB 4 Gen 2x2
USB-C connector (USB4 40Gbps)	USB-C (USB 4) connector
USB-C connector (Thunderbolt 3)	USB-C (Thunderbolt 3) connector
USB-C connector (Thunderbolt 4)	USB-C (Thunderbolt 4) connector

© Copyright Lenovo 2025, 2026

Appendix C. Notices and trademarks

Notices

Lenovo may not offer the products, services, or features discussed in this document in all countries. Consult your local Lenovo representative for information on the products and services currently available in your area. Any reference to a Lenovo product, program, or service is not intended to state or imply that only that Lenovo product, program, or service may be used. Any functionally equivalent product, program, or service that does not infringe any Lenovo intellectual property right may be used instead. However, it is the user's responsibility to evaluate and verify the operation of any other product, program, or service.

Lenovo may have patents or pending patent programs covering subject matter described in this document. The furnishing of this document does not give you any license to these patents. You can send license inquiries, in writing, to:

Lenovo (United States), Inc.
8001 Development Drive
Morrisville, NC 27560
U.S.A.
Attention: Lenovo Director of Licensing

LENOVO PROVIDES THIS PUBLICATION "AS IS" WITHOUT WARRANTY OF ANY KIND, EITHER EXPRESS OR IMPLIED, INCLUDING, BUT NOT LIMITED TO, THE IMPLIED WARRANTIES OF NON-INFRINGEMENT, MERCHANTABILITY OR FITNESS FOR A PARTICULAR PURPOSE. Some jurisdictions do not allow disclaimer of express or implied warranties in certain transactions, therefore, this statement may not apply to you.

Changes are made periodically to the information herein; these changes will be incorporated in new editions of the publication. To provide better service, Lenovo reserves the right to improve and/or modify the products and software programs described in the manuals included with your computer, and the content of the manual, at any time without additional notice.

The software interface and function and hardware configuration described in the manuals included with your computer might not match exactly the actual configuration of the computer that you purchase. For the configuration of the product, refer to the related contract (if any) or product packing list, or consult the distributor for the product sales. Lenovo may use or distribute any of the information you supply in any way it believes appropriate without incurring any obligation to you.

The products described in this document are not intended for use in implantation or other life support applications where malfunction may result in injury or death to persons. The information contained in this document does not affect or change Lenovo product specifications or warranties. Nothing in this document shall operate as an express or implied license or indemnity under the intellectual property rights of Lenovo or third parties. All information contained in this document was obtained in specific environments and is presented as an illustration. The result obtained in other operating environments may vary.

Lenovo may use or distribute any of the information you supply in any way it believes appropriate without incurring any obligation to you.

Any references in this publication to non-Lenovo Web sites are provided for convenience only and do not in any manner serve as an endorsement of those Web sites. The materials at those Web sites are not part of the materials for this Lenovo product, and use of those Web sites is at your own risk.

© Copyright Lenovo 2025, 2026

Any performance data contained herein was determined in a controlled environment. Therefore, the result obtained in other operating environments may vary significantly. Some measurements may have been made on development-level systems and there is no guarantee that these measurements will be the same on generally available systems. Furthermore, some measurements may have been estimated through extrapolation. Actual results may vary. Users of this document should verify the applicable data for their specific environment.

This document is copyrighted by Lenovo and is not covered by any open source license, including any Linux agreement(s) which may accompany software included with this product. Lenovo may update this document at any time without notice.

For the latest information or any questions or comments, contact or visit the Lenovo Web site: https://pcsupport.lenovo.com

HEVC Standard

This product may support digital video coding under certain versions of HEVC (High Efficiency Video Coding) standard and, if so, may be covered by patents at https://accessadvance.com/advance-patent-lists/.

Trademarks

Lenovo, Lenovo logo, ThinkStation, and ThinkStation logo are trademarks of Lenovo. Intel, core, and Thunderbolt are trademarks of Intel Corporation or its subsidiaries in the U.S. and/or other countries. Microsoft, Windows, and Cortana are trademarks of the Microsoft group of companies. Mini DisplayPort (mDP), DisplayPort, and VESA are trademarks of the Video Electronics Standards Association. The term HDMI is a trademark of HDMI Licensing LLC in the United States and other countries. Wi-Fi and Miracast are registered trademarks of Wi-Fi Alliance. USB-C is a registered trademark of USB Implementers Forum. All other trademarks are the property of their respective owners.

Lenovo