User Guide

Lenovo
ThinkPad

ThinkPad X1 2–in–1 Gen 11

Read this first

This *User Guide* provides the essential hardware and setup information for your notebook computer. It includes product illustrations, specifications, instructions for basic configuration, and guidance on hardware replacement.

Before operating your notebook computer for the first time, read the safety-related documents listed below to understand important safety and regulatory information.

- *Safety and Warranty Guide*
- *Generic Safety and Compliance Notices*

For more supporting documents, go to *Lenovo Documentation Center* and search by the product name.

First Edition (March 2026)

© Copyright Lenovo 2026.

LIMITED AND RESTRICTED RIGHTS NOTICE: If data or software is delivered pursuant to a General Services Administration “GSA” contract, use, reproduction, or disclosure is subject to restrictions set forth in Contract No. GS-35F-05925.

Contents

Read this first.....i

Preface: Discover your Lenovo notebook.....iv

Chapter 1 Meet your computer.....1
Front view.....1
Side view.....4
Bottom view.....5
Features and specifications.....7
USB specifications.....8

Chapter 2 Get started with your computer.....10
Set up your computer.....10
Turn on the computer.....10
Complete the operating system setup.....11
Access networks.....11
Connect to Wi-Fi networks.....11
Connect to the wired Ethernet.....11
Connect to a cellular network (for selected models).....12
Turn on Airplane mode.....13
Manage power.....13
Check the battery status.....13
Charge the computer with ac power.....13
Maximize the life of the battery.....14
Use the computer-to-computer charging function.....14
Change the power settings.....14
Transfer data.....15
Connect to a Bluetooth device.....15
Set up an NFC connection.....15
Interact with your computer.....16
Use the keyboard shortcuts.....16
Connect to an external display.....18
Get to know convertible multi-modes.....19

Chapter 3 Secure your computer and information.....21
Lock the computer.....21
Log in with fingerprint recognition.....21
Log in with facial recognition.....22
Use the ePrivacy screen (for selected models).....22
Use the password privacy function.....23
Protect data against power loss.....23
USB-C Restricted Mode.....23
Associate your fingerprints with passwords (for selected models).....24
FIDO (Fast Identity Online) authentication.....24
Register FIDO2 USB device in ThinkShield Passwordless Power-On Device Manager.....24
Log in to the System with Passwordless Power-On Authentication.....25
Supervisor Certificate.....25
ThinkShield secure wipe.....26

Chapter 4 Help and support.....27
Error messages.....27
Battery-charge LED indicator diagnosis.....28
Diagnostics tool.....30

Troubleshoot and diagnose at Lenovo Support Web site.... 31
Hardware scan.... 31
UEFI Diagnostics tool.... 31
Lenovo Memory Self Repair.... 32
Detect memory retraining.... 32
Windows label.... 33
Call Lenovo.... 33
Before you contact Lenovo.... 33
Find your service QR code and serial number.... 33
Lenovo Customer Support Center.... 34

Chapter 5 CRU replacement.... 36
What are CRUs.... 36
CRU list.... 36
Before you replace any CRU.... 37
Disable Fast Startup.... 37
Disable the built-in battery.... 37
Replace a CRU.... 38
Base cover assembly.... 38
Built-in battery.... 39
Wireless WAN module and wireless WAN module bracket (for selected models).... 41
M.2 solid-state drive, and M.2 solid-state drive bracket.... 45

Appendix A Compliance information.... 48
Certification-related information.... 48
Locate the UltraConnect wireless antennas.... 48
Operating environment.... 50
Laser safety information.... 50

Appendix B Important notice for Quebec consumers.... 51

Appendix C Accessibility features.... 52

Appendix D Notice for USB connector name update.... 53

Appendix E Notices and trademarks.... 54

Discover your Lenovo notebook

Thank you for choosing a Lenovo® notebook! We are dedicated to delivering the best solution to you.

Before starting your tour, please read the following information:

- Illustrations in this documentation might look different from your product.
- Depending on the model, some optional accessories, features, software programs, and user interface instructions might not be applicable to your computer.
- Documentation content is subject to change without notice. To get the latest documentation, go to https://pcsupport.lenovo.com.

HEVC Standard

This product may support digital video coding under certain versions of HEVC (High Efficiency Video Coding) standard and, if so, may be covered by patents at https://accessadvance.com/advance-patent-lists/.

HEVC Advance™
Covered by patents at patentlist.accessadvance.com

Chapter 1 Meet your computer

This chapter introduces the appearance, features and specifications of your computer.

Front view

Have a quick glance at the front view of your computer.

Microphone

Turn on the microphone to capture sound and voice when it is used with an application program capable of handling audio.

Webcam privacy shutter

Slide the webcam privacy shutter left to cover the camera lens when not in use or in public network to prevent unauthorized access and enhance privacy.

Infrared camera

Use the infrared camera (up to 10MP) to take pictures, shot videos or scan barcodes in Camera or other application programs that provide features such as photographing, video capturing, and video conferences.

Time-of-flight sensor*

The time-of-flight sensor (also referred to as ToF sensor) emits an infrared laser and uses the reflected infrared energy to measure the distance and depth of objects in front of the ToF sensor. The data collected by the sensor can be used to detect human presence or recognize gestures.

Note:

The infrared laser emitted by the ToF sensor is invisible and has no harm to human eyes.

Touch screen*

Interact with your computer through intuitive controls like tapping, swiping, pinching, and zooming.

Power button with fingerprint reader

The power button on your computer performs following functions depending on how you press it:

- Power on: Press the power button to turn on the computer and log in with your fingerprint. For more information about fingerprints enrollment, see Log in with fingerprint recognition on page 21.
- Enter sleep mode: Press the power button for one second to enter sleep mode.
- Force a shutdown: If the computer becomes unresponsive, press and hold the power button for at least 10 seconds to force a shutdown.
- Hard reset: If a forced shutdown does not work, or if you encounter issues such as the battery not charging, abnormal fan behavior, keyboard malfunction, or power management errors, disconnect the ac adapter then press and hold the power button for at least 14 seconds to perform a hard reset.

Note:

Performing a forced shutdown or hard reset might cause unsaved data loss or file corruption. Perform these operations with caution.

NFC (near field communication) label*

Simply tap and connect your computer and another NFC-enabled device over a few centimeters or inches. To set up an NFC connection, see Set up an NFC connection on page 15.

Haptic Touchpad*

Experience all the pointing, clicking, and scrolling functions of a traditional mouse through Haptic Touchpad.

Note:

Depending on the model, your computer comes with either a Trackpad or a Haptic Touchpad.

TrackPoint Three Buttons

The TrackPoint left button and TrackPoint right button correspond to the left and right buttons of a traditional mouse. Press and hold the TrackPoint center button while using your finger to applying pressure to the pointing stick in the vertical or horizontal direction. Then, you can scroll through the document, Web site, or apps.

TrackPoint pointing stick

Use your finger to apply pressure to the pointing-stick nonslip cap in any direction parallel to the keyboard. The pointer on the screen moves accordingly.

* for selected models

Important information

Your computer contains magnets. Keep a safe distance away from devices and objects that might be affected by magnets, such as credit cards.

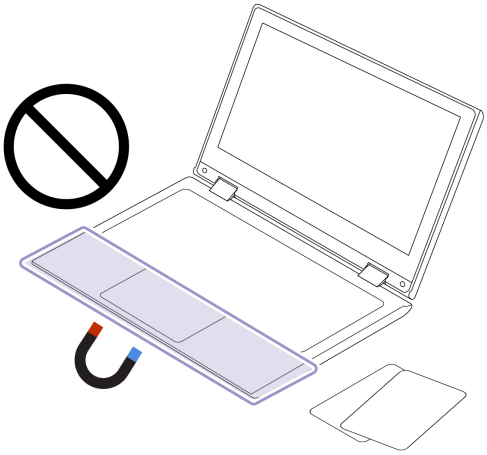

Side view

Have a quick glance at ports on both sides of your computer.

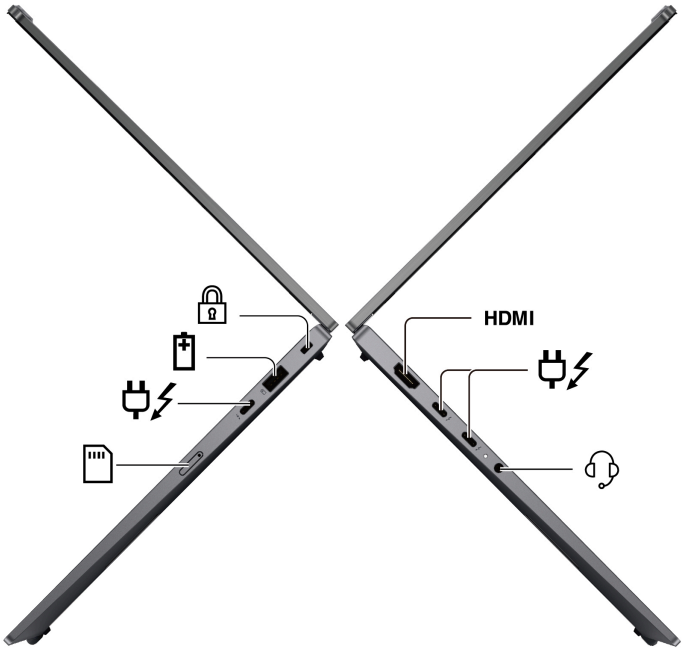

HDMI™ connector

Connect your computer to external displays, projectors, or HDTVs through the HDMI connector. For more information about the external display connection, see Connect to an external display on page 18

USB-C® power connector (Thunderbolt™ 4)

Experience high-speed data transfer, power delivery, or multi-device support through the USB-C connector. For more information about USB specifications, see USB specifications on page 8.

Audio connector

Connect wired headphones, headsets, external speakers, or microphones for audio playback and recording through the audio connector.

Nano-SIM-card tray*

Insert a Nano-SIM card to connect a 4G or 5G cellular data network. To install or remove a nano-SIM card, seeConnect to a cellular network (for selected models) on page 12.

USB-A connector (USB 5Gbps, Always On USB)

Charge smart phones, tablets, or other USB devices even when your computer is turned off, in sleep mode, or hibernating through the USB-A connector. For more information about USB specifications, see USB specifications on page 8.

Security slot

Lock your computer to a desk, table, or other fixtures through a compatible security cable lock. For more information about the security slot, see Lock the computer on page 21.

Note:

For more information about the USB connector name update, see Notice for USB connector name update on page 53.

* for selected models

Statement on USB transfer rate

Depending on many factors such as the processing capability of the host and peripheral devices, file attributes, and other factors related to system configuration and operating environments, the actual transfer rate using the various USB connectors on this device will vary and will be slower than the data rate listed in the connector name or below for each corresponding device.

USB device	Data rate (Gbps)
Thunderbolt 3	40
Thunderbolt 4	40

Bottom view

Have a quick glance at the bottom part of your computer.

Speaker

The built-in dual stereo speakers deliver clear, balanced audio for everyday tasks from streaming movies to video calls.

Emergency-reset hole

Emergency-reset hole can help you to recover computer when the computer stops responding and you cannot turn it off by pressing the power button. Do the following to reset your computer:

1. Disconnect your computer from ac power.
2. Insert a straightened paper clip into the hole to cut off power supply temporarily.
3. Connect your computer to ac power and then turn on your computer.

If your computer is still no response, you can call Lenovo Customer Support Center to get further help.

CAUTION:

When the computer is operating, it should be placed on a hard and flat surface with its bottom area not in contact with user's bare skin. Under normal operating conditions, the temperature of the bottom surface will remain within an acceptable range as defined in *IEC 62368-1*, but such temperatures can still be high enough to cause discomfort or harm to the user if directly touched for over 10 seconds at a time. As such, it is recommended that users avoid prolonged direct contact with the bottom of the computer.

Note:

Some Lenovo computers include a display that can be rotated 360 degrees. When those products are used as a tablet computer, the temperatures of all the accessible parts are within an acceptable range as defined in *IEC 62368-1*.

Features and specifications

Get to know more hardware and software details of your computer.

Specification	Description
Memory	Low Power Double Data Rate 5X (LPDDR5X), soldered on board, up to 64 GB
Storage device	One slot, 2280 M.2 solid-state drive, up to 2 TB **Note:** In case of M.2 SSD replacement, your computer only supports single-sided M.2 SSD. Double-sided M.2 SSD is not applicable due to the height limitation of the slot.
Audio	• Dolby Atmos® • Smart Noise Cancellation
Display	• 2.8K,120Hz refresh rate OLED or WUXGA 60Hz refresh rate LCD display • Display ratio: 16:10 • Display resolution: - OLED display: 2880 x 1800 pixels pixels - LCD display: 1920 x 1200 pixels • Multi-touch technology • TUV Eye Safe certified • Dolby Vision® (for OLED display models only)
Security features	• Face authentication • Presence Sensing • Fingerprint reader • Trusted Platform Module (TPM)*
Wireless features	• Bluetooth • NFC* • GPS (on wireless WAN model)* • Wireless LAN • Wireless WAN (4G or 5G)*

Specification	Description
	Note: The 4G or 5G cellular service is provided by authorized mobile service carriers in some countries or regions. You must have a cellular plan from a service carrier to connect to the cellular network. The cellular data plan might vary by location.

* for selected models

USB specifications

Get to know more USB specifications.

Note:

- Depending on the model, some USB connectors might not be available on your computer.
- On very rare occasions, the USB-C compatible devices connected to the USB-C connector might interfere with the wireless feature. If you computer cannot be connected to the Wi-Fi or cellular network, or if your location cannot be pinpointed through the GPS function, detach the USB-C compatible devices from the USB-C connector.

Connector name	Description
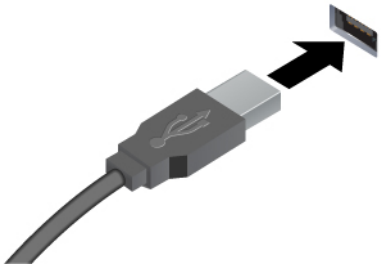 • USB-A connector (Hi-Speed USB) • USB-A connector (USB 5Gbps) • USB-A connector (USB 10Gbps)	Connect USB-compatible devices, such as a USB keyboard, USB mouse, USB storage device, or USB printer.
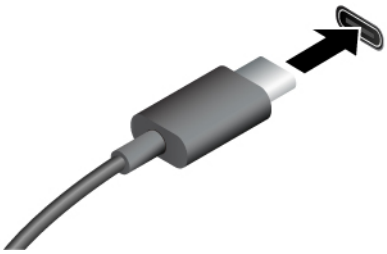 • USB-C connector (USB 5Gbps) • USB-C connector (USB 10Gbps)	• Charge USB-C compatible devices with the output voltage and current of 5 V and 1.5 A. • Connect to an external display: - USB-C to VGA: up to 1920 x 1200 pixels, 60 Hz - USB-C to DP 1.4: up to 5120 x 3200 pixels, 60 Hz - USB-C to DP 2.1: up to 7680 x 4320pixels, 60 Hz • Connect to USB-C accessories to help expand your computer functionality. To purchase USB-C accessories, go to https://www.lenovo.com/accessories.

Connector name	Description
• USB-C connector (Thunderbolt 3) • USB-C connector (Thunderbolt 4) • USB-C connector (USB4 40Gbps) • USB-C connector (DP Alt mode DP 2.1)	

Chapter 2 Get started with your computer

This chapter introduces the instructions of setting up your computer, various ways to connect to networks, and to interact with your computer.

Set up your computer

This section helps you to set up your computer and get it ready for use.

Turn on the computer

Follow the instructions to turn on your computer.

1. Connect the power cord to the ac power adapter.
2. Connect the power adapter to your computer.
3. Plug the power cord into the ac power.
4. Press the power button to turn on your computer.

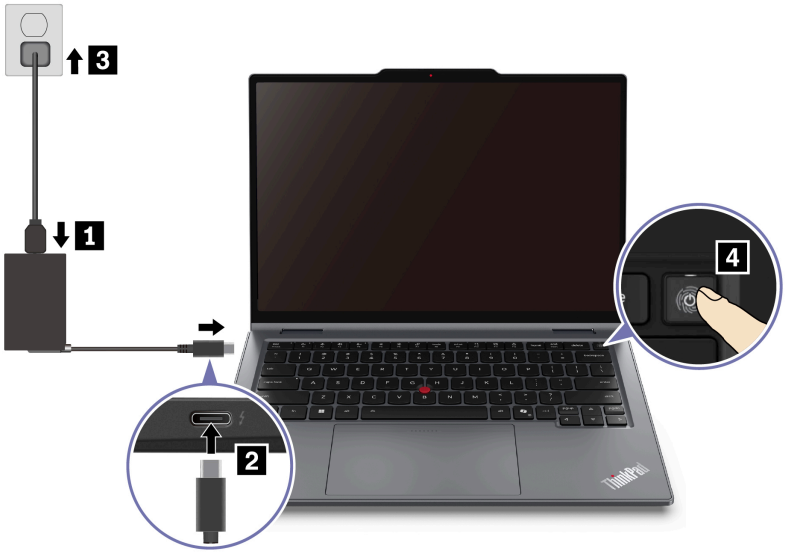

Note:

- The appearance varies depending on the computer model.
- Some models might not ship with ac adapters or power cords. Use only the certified adapters and power cords that comply with the requirements of relevant national standards (such as UL/EN/IEC 62368-1) to charge the product. It is recommended to use the Lenovo qualified adapters. Unqualified adapters may cause hazards. You can refer to https://www.lenovo.com/us/en/compliance/eu-doc.
- It is recommended to fully charge the computer when using it for the first time. Click the battery status icon at the bottom right of your desktop to check the battery status.

Related topics

- Check the battery status on page 13
- Charge the computer with ac power on page 13

Complete the operating system setup

Before exploring your computer, you need to complete the operating system setup. The setup includes but is not limited to:

- Select the country or region.
- Connect to an available network.
- Accept the license agreement.
- Create a Microsoft account or log in with your Microsoft account.
- Set up your password, fingerprint, or facial recognition as preferred.
- Customize your experience.

> **Note:**
>
> - Depending on the model, some settings might not be available on your computer.
> - Do not turn off your computer and ensure it is connected to the ac power during the whole process.

Follow the instructions to set up the operating system.

1. Connect the computer to the ac power and turn it on.
2. Follow the on-screen instructions to complete the operating system setup.

Related topics

- Log in with your fingerprint on page 21
- Log in with facial recognition (for selected models) on page 22

Access networks

This section helps you connect to a wireless or wired network.

Connect to Wi-Fi networks

Click the network icon on the bottom right of your display to connect to an available network. Provide required information, if needed.

> **Note:**
>
> The wireless LAN module on your computer might support different standards. For some countries or regions, use of 802.11ax/be and/or 6 GHz frequency band might be disabled according to local regulations.

Connect to the wired Ethernet

To connect your computer to a local network, you need a Lenovo USB-C to Ethernet Adapter. Lenovo USB-C to Ethernet Adapter is available as an option and shipped with some computer models. You can purchase one from Lenovo at https://www.lenovo.com/accessories.

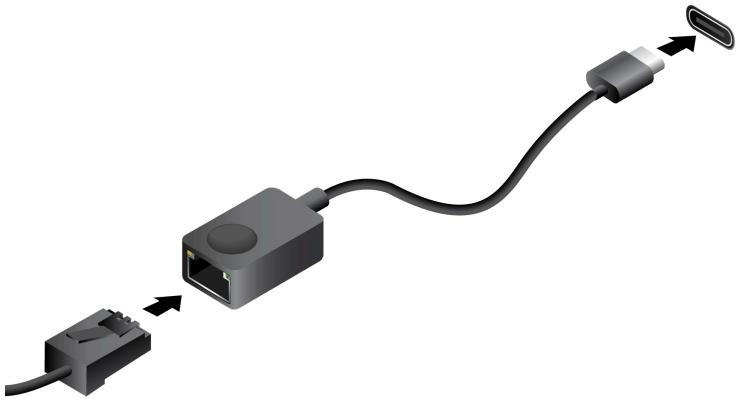

Connect to a cellular network (for selected models)

This section introduces how to establish a cellular connection.

To connect a 4G or 5G cellular data network, you must have a wireless wide area network (WWAN) module and a nano-SIM card installed. The nano-SIM card might come with your computer by countries or regions. If no nano-SIM card is shipped, you will need to purchase one from authorized service carriers.

Note:

- Depending on the model, your computer might have no WWAN module installed.
- The 4G or 5G cellular service is provided by authorized mobile service carriers in some countries or regions. You must have a cellular plan from a service carrier to connect to the cellular network. The cellular data plan might vary by location.
- Network connection speeds might also vary by location, environment, network conditions and other factors.

Establish a cellular connection

This section introduces how to establish a cellular connection.

1. Turn off the computer.
2. Insert a straightened paper clip into the hole in the nano-SIM-card tray. The tray ejects. Install a nano-SIM card as shown and insert the tray into the nano-SIM-card slot. Note the orientation of the card and ensure that it is seated correctly.

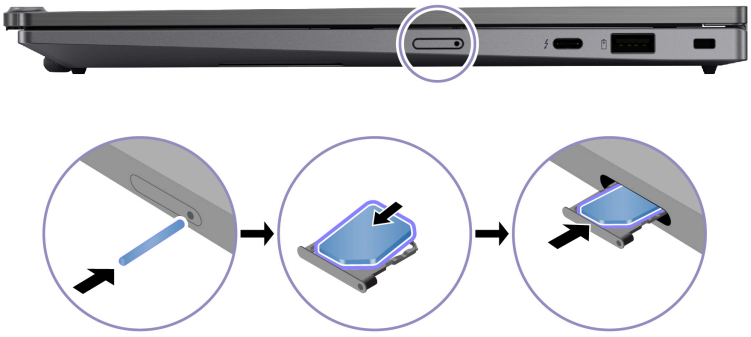

3. Turn on the computer.

4. Click the network icon, and then select the cellular network icon from the list. Provide required information, if needed.

Turn on Airplane mode

You might need to turn on Airplane mode if you board an airplane. When Airplane mode is on, all wireless features are turned off automatically. Click the network icon on the bottom right of your display to turn on Airplane mode.

> **Note:**
>
> You can enable Wi-Fi networks in this mode according to your actual needs.

Manage power

Use the information in this section to achieve the best balance between performance and power efficiency.

Check the battery status

Check the battery status to help use computer properly.

Go to **Settings** > **System** to check the battery status. For more details about your battery, refer to the Vantage app.

Charge the computer with ac power

Power source of the ac power adapter:

- Power: 65 W
- Sine-wave input at 50 Hz to 60 Hz
- Input rating of the ac power adapter: 100 V to 240 V ac, 50 Hz to 60 Hz
- Output rating of the ac power adapter: 20 V dc, 3.25 A

When the battery power is low, charge your battery by connecting your computer to ac power with the supplied power adapter. The 65 W ac power adapter supports the rapid charge function, the battery is 80% charged in about one hour when the computer is turned off. The actual charging time depends on the battery size, the physical environment, and whether you are using the computer.

Battery charging is also affected by its temperature. The recommended temperature range for charging the battery is between 10°C (50°F) and 35°C (95°F).

> **Note:**
>
> Some models might not ship with ac adapters or power cords. Use only the certified adapters and power cords that comply with the requirements of relevant national standards (such as UL/EN/IEC 62368-1) to charge the product. It is recommended to use the Lenovo qualified adapters. Unqualified adapters may cause hazards. You can refer to https://www.lenovo.com/us/en/compliance/eu-doc.

Maximize the life of the battery

Follow the instructions to maximize the life of the battery.

- Use the battery until the charge is depleted and recharge the battery completely before using it. Once the battery is fully charged, it must discharge to 94% or lower before it will be allowed to recharge again.
- Keep the battery from full charge when it is not in heavy use. For more information, refer to the **Battery settings** tab in the **Power** section of the Vantage app.
- The battery might optimize its full charge capacity based on your usage. After prolonged periods of limited use, full battery capacity might not be available until you discharge to as low as 20% and recharge completely. For more information, refer to the **Battery settings** tab in the **Power** section of the Vantage app.

Use the computer-to-computer charging function

Your computer supports charging between two Lenovo computers. Before using this function, ensure the following requirements are met:

- Use a USB-C to USB-C charging cable. The data-transfer cable will not deliver power.
- The USB-C connectors must support charging function.
- Both computers must be Lenovo computers and support the computer-to-computer charging function.

To use this function, do the following:

1. Connect the power adapter to either of the computers (computer A).
2. Use a USB-C to USB-C charging cable to connect computer A and computer B via their USB-C connectors.

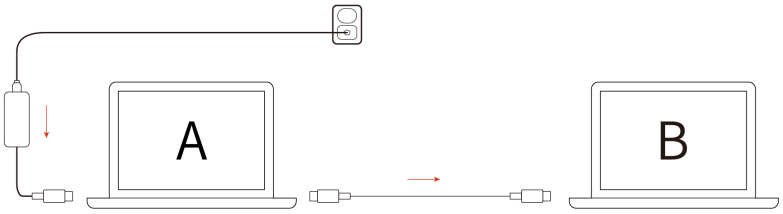

Note:

The charging speed might vary depending on many factors, such as the battery level of both computers, the wattage of the ac power adapter, and whether the computers are in use during charging.

Change the power settings

Follow the instructions to change the power settings of your preference.

For ENERGY STAR® compliant computers, the following power plan takes effect by default when your computer is on ac power and has been idle for a specified duration:

- Turn off the display: After 5 minutes
- Put the computer to sleep: After 5 minutes

To change the power plan, the power button function and other settings, do the following:

1. Go to **Control Panel** and view by Large icons or Small icons.
2. Click **Power Options**.
3. Change the settings as you prefer.

Transfer data

Quickly share your files using the built-in Bluetooth among devices with the same features.

Connect to a Bluetooth device

You can connect all types of Bluetooth-enabled devices to your computer, such as a keyboard, a mouse, a smartphone, or speakers. To ensure successful connection, place the devices at most 10 meters (33 feet) from the computer.

Conventional pair

This topic helps you connect to a Bluetooth device by conventional pair.

1. Type **Bluetooth** in the Windows search box and then press Enter.
2. Turn on both the Bluetooth on your computer and the Bluetooth device. Make sure the device is discoverable.
3. Select the device when it is displayed on the **Add device** list, and then follow the on-screen instructions.

Swift pair

This topic helps you connect to a Bluetooth device by swift pair.

If your Bluetooth device supports swift pair, do the following:

1. Enable swift pair notification on Bluetooth settings page.
2. Turn on both the Bluetooth on your computer and the Bluetooth device. Make sure the device is discoverable.
3. Click **Connect** when a swift pair notification appears on your computer.

Set up an NFC connection

Simply tap and connect your computer and another NFC-enabled device over a few centimeters or inches.

If your computer supports NFC, you will see an NFC mark or label around the Trackpad area.

To turn on NFC:

1. Type **Airplane mode** in the Windows search box and then press Enter.
2. Ensure that Airplane mode is off and turn on the NFC function.

By using NFC, you can simply tap and connect your computer and another NFC-enabled device over a few centimeters or inches. To pair with an NFC card:

Note:

Ensure that the NFC card is in NFC Data Exchange Format (NDEF), otherwise the card cannot be detected.

Interact with your computer

Explore various ways to interact with your computer.

Use the keyboard shortcuts

Keyboard shortcuts are keys or combinations of keys that provide a quick way to perform particular functions. They help you work more efficiently.

The following tables introduce the functions of keyboard shortcuts.

FnLock and function keys

Key / Key combination	Function description
fn+fn lock	Switch between the special and standard functions of the function keys (F1–F12). Function keys provide two sets of functions: special function and standard function. Icons on the key denote the special function, such as 🔇 and 🔉. Characters on the key denote the standard function, such as F1 and F2. LED indicator on esc key indicates which function of the function keys is enabled: ● When the indicator is off, the special function is enabled. ● When the indicator is on, the standard function is enabled.
🔇	Mute / Unmute (Speakers).
🔉	Decrease volume.

Key / Key combination	Function description
🔊	Increase volume.
🎤×	Enable / Disable the microphone.
☼	Decrease screen brightness.
☼	Increase screen brightness.
⧉	Select and set up display devices.
mode	Change power mode.
prt sc	Print screen.
⛶	Open Snipping Tool.
📱	Open Microsoft® Phone Link.
☆	Customize the function of this key on the Vantage app.

Other general keyboard shortcuts

Key / key combination	Function description
⊞	• Launch Copilot in Windows. • Launch Windows Search. ⓘ **Note:** The function varies by countries or regions.
fn+☰	Open the context menu of the current active app.
fn+⛶	Open the Snipping Tool.
fn+☀	Adjust the keyboard backlight.
fn+◁	Go to beginning.
fn+▷	Go to end.
fn+tab	Open Magnifier. ⓘ **Note:** Press the Windows logo key+esc to turn it off.
fn+4	Enter sleep mode.
fn+B	Break operation.

Key / key combination	Function description
fn+K	Scroll lock.
fn+P	Pause operation.
fn+S	Send system request.
fn+N	Open system information window.
fn+G	Enable / Disable the tapping gesture to launch TrackPoint Quick Menu.

You can customize keyboard settings in Vantage app. To customize detailed settings, open the Vantage app, and then click **Device** > **Input & Accessories**.

For more keyboard shortcuts, go to https://support.lenovo.com/solutions/windows-support.

Connect to an external display

Connect your computer to a projector or a monitor to give presentations or expand your workspace.

> **Note:**
>
> It's not recommended that you connect or disconnect the external display when in pre-OS environment. Otherwise, your computer screen might go black.

Connect to a wired display

You can connect a wired display with your computer through the USB-C connector or HDMI connector.

If your computer cannot detect the external display, right-click a blank area on the desktop and select **Display settings**. Then follow the on-screen instructions to detect the external display.

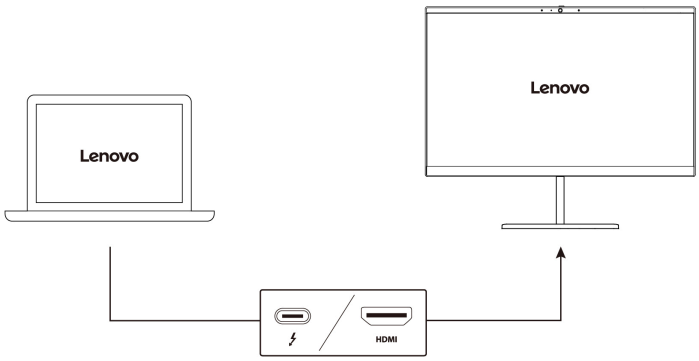

Supported resolution

The following table lists the supported maximum resolution of the external display.

Connect the external display to	Supported resolution
USB-C connector (Thunderbolt 4)	Up to 8K / 60 Hz
HDMI connector	Up to 4K / 60 Hz

Note:

The refresh rate higher than 60 Hz can also be supported. If you set the refresh rate higher than 60 Hz, the maximum resolution might be limited.

Connect to a wireless display

To use a wireless display, ensure that both your computer and the external display support the Miracast® feature.

Press Windows logo key+K and then select a wireless display to connect with.

Set the display mode

Press or Fn key+ and then select a display mode of your preference.

Change display settings

You can change the settings for both the computer display and the external display, such as the main or the secondary display, brightness, resolution, and orientation.

To change the settings, do the following:

1. Right-click a blank area on the desktop and select **Display settings**.
2. Select the display that you want to configure and change display settings of your preference.

Get to know convertible multi-modes

The computer display can be opened up to an angle of 360 degrees. Rotate the computer display to switch among different convertible multi-modes for different purposes.

Note:

- Do not rotate the display with too much force, or apply too much force to the upper-right or upper-left corner of the display. Otherwise, the computer display or hinges might get damaged.
- The keyboard and the pointing device are automatically disabled in the stand mode, tent mode, and tablet mode. Use the touch screen to control your computer instead. The keyboard and the pointing device will be enabled again automatically when you switch from other modes to notebook mode.

Recommended scenario	Recommended scenario
Notebook mode Enter text. Use the Trackpad and the pointing device.	**Stand mode** Have a video call. Give a presentation.

Recommended scenario	Recommended scenario
Tent mode Watch a video. View a slide show. 	**Tablet mode** Write and draw. Play touch-enabled games.

Chapter 3 Secure your computer and information

Your computer can safeguard your privacy and information through some privacy protection functions.

Lock the computer

Lock your computer to a desk, table, or other fixtures through a compatible security cable lock.

> **Note:**
>
> The slot supports cable locks that conform to the Kensington NanoSaver® lock standards using Cleat™ locking technology. You are responsible for evaluating, selecting, and implementing the locking device and security feature. Lenovo is not responsible for the locking device and security feature. You can purchase the cable locks at https://smartfind.lenovo.com.

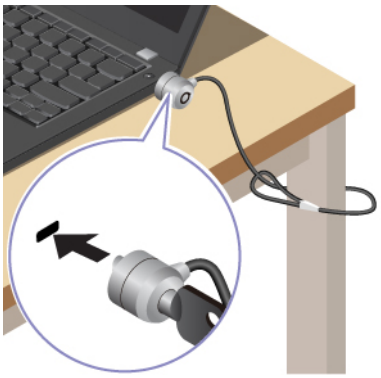

Log in with fingerprint recognition

The fingerprint reader is integrated with the power button. You can power on and log in to the computer with your fingerprint. It eliminates the need to enter complex passwords, saving your time and boosting your productivity.

To enroll your fingerprints, do the following:

1. Type **Sign-in options** in the Windows search box and then press Enter.
2. Select **Fingerprint recognition (Windows Hello)** and then follow the on-screen instruction to enroll your fingerprint.

   > **Note:**
   >
   > It is recommended that you put your finger at the center of the fingerprint reader key during enrollment and enroll more than one fingerprint in case of any injuries to your fingers. After the enrollment, the fingerprints are associated with the Windows password automatically.

3. Log in with your fingerprint. When the fingerprint reader indicator is solid green, tap your finger on the fingerprint reader for authentication.

Note:

You can associate your fingerprints with your power-on password and NVMe password. See Associate your fingerprints with passwords (for selected models) on page 24.

Maintenance tips:

- Do not scratch the surface of the reader with anything hard or sharp.
- Do not use or touch the reader with a wet, dirty, wrinkled, or injured finger.

Log in with facial recognition

You can log in to the computer with your facial recognition. It provides precise and secure authentication.

For models come with a webcam privacy shutter, slide the webcam privacy shutter to uncover the camera lens before using the Windows Hello face recognition.

Set up facial recognition and unlock your computer by scanning your face:

1. Type **Sign-in options** in the Windows search box and then press Enter.
2. Select **Facial recognition (Windows Hello)** and then follow the on-screen instruction to enroll your facial ID.

Use the ePrivacy screen (for selected models)

Your computer might come with an ePrivacy screen. It can reduce screen visibility from side angles to protect screen content against visual hacking.

This function is disabled by default. You can press F12 or Fn+D to enable it. You will be prompted by the on-screen icon ▨ or ▩ every time the function is enabled or disabled.

You can press ☼ to increase the privacy level or ☼ to decrease the privacy level.

Note:

The privacy level of this function varies depending on the screen brightness level, the contrast ratio, and the physical environment where you are using this function. The recommended range of the screen brightness level is 50-60.

Use the password privacy function

Once enabled, the password privacy function can be automatically activated in case that you are required to input passwords.

To enable this function:

1. Open the Vantage app, and then click **Device** > **Display & Camera**.
2. Locate the **Privacy Guard** option, and select **Enable this feature when typing passwords** to enable this function.

> **Note:**
>
> Once enabled, the password privacy function is available even when you disable the ePrivacy function.

Protect data against power loss

NVMe (Non-Volatile Memory express) M.2 solid-state drive features the Lenovo-unique PLP (Power Loss Protection) function to avoid data loss or damage.

If your computer is not responding and you might have to shut down your computer by pressing and holding the power button for several seconds. In this case, the PLP function enables your computer data to be saved timely. However, there is no guarantee that all data is saved in any situation.

To check the type of your M.2 solid-state drive:

1. Restart the computer. When the logo screen is displayed, press F10 to enter the Lenovo diagnostics window.
2. On the TOOLS tab, select **SYSTEM INFORMATION** > **STORAGE** using the arrow keys.
3. Locate the **Device Type** section to check the information.

USB-C Restricted Mode

USB-C Restricted Mode is a security feature that allows you to disable data transfer through USB-C connectors while the charge function of the USB-C connectors is kept. It helps prevent data from being copied from the computer to USB storage devices connected to the computer. By enabling this feature, you can use public USB charging stations, such as those found in cafes and hotel lobbies, without worrying about data leakage from the USB-C connector.

> **Note:**
>
> - Before using this feature, ensure that the remaining battery power is not less than 5%. Otherwise, this feature can not be enabled.
> - This feature can be enabled or disabled by key combinations only when the computer is turned on.

To enable or disable this feature, press Fn+U, and then press Fn+S.

After this feature is enabled, the LED indicator blinks briefly when a USB device is connected.

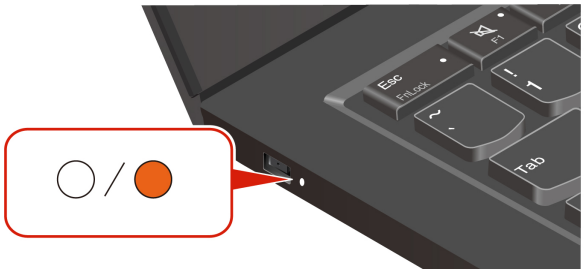

Associate your fingerprints with passwords (for selected models)

You can associate the fingerprints with passwords to get quick access to the computer and the data on the storage drive without entering the power-on password or NVMe password.

Do the following to associate your fingerprints with the power-on password and NVMe password:

1. Turn off and then turn on the computer.
2. When prompted, scan your finger on the fingerprint reader.
3. Enter your power-on password, NVMe password, or both as required. The association is established.

When you start the computer again, you can use your fingerprints to log in to the computer without entering your Windows password, power-on password, or NVMe password. To change settings, press F1 to enter the UEFI BIOS menu, and then select **Security** > **Fingerprint**.

Attention:

If you always use your fingerprint to log in to the computer, you might forget your passwords. Write down your passwords, and keep them in a safe place.

FIDO (Fast Identity Online) authentication

Your computer supports FIDO (Fast Identity Online) authentication feature. This feature works as an alternative to password-based authentication to achieve passwordless authentication.

This feature only works when a power-on password is set in UEFI BIOS and the FIDO2 USB device is registered in ThinkShield™ Passwordless Power-On Device Manager. With this feature, you can input the power-on password or use the registered FIDO2 USB device to power on your computer.

Register FIDO2 USB device in ThinkShield Passwordless Power-On Device Manager

Follow the instructions to register FIDO2 USB device in ThinkShield Passwordless Power-On Device Manager.

1. Turn on the computer.
2. Press F12 during the power-on process.
3. If you set a power-on password, you are prompted to enter the correct password.
4. Select **App Menu** > **ThinkShield Passwordless Power-On Device Manager** and press Enter
5. Insert the FIDO2 USB device to register the device by following steps:
   a. Select the available FIDO2 USB device that you want to register in the **Discovered Devices** field.
   b. Click **Yes** in the displayed window to confirm the device you selected
   c. If you set a power-on password, you are prompted to enter the correct password.

d. The **User operation request** window is displayed. You are prompted to press the button on the connected FIDO2 USB device, and then follow the on-screen instructions to close the window.
e. Press Esc to exit and restart your computer.

> **Note:**
>
> - If you want to unregister your devices, click the available FIDO2 USB device that you want to unregister in the **My Device** field and enter the correct power-on password for verification.
> - If you use more than one FIDO2 USB device with a common identifier for registration, only one device is available.

Log in to the System with Passwordless Power-On Authentication

Follow the instructions to log in to the System with Passwordless Power-On Authentication.

1. Restart the computer.
2. **ThinkShield Passwordless Power-On Authentication** window is displayed.
3. Insert your registered FIDO2 USB device for detection.
4. Then follow the on-screen instructions to press the button on your FIDO2 USB device for verification.
5. After your device is verified, the power-on process continues.

> **Note:**
>
> You should insert the FIDO2 USB device or enter the power-on password within 60 seconds. Otherwise, your computer will shut down automatically.

Supervisor Certificate

Supervisor Certificate (also called the password-less management mode) provides more secure UEFI BIOS management with password-free solution. It is used to replace the supervisor password / system management password for authentication if you have set one.

> **Note:**
>
> Supervisor password / system management password are disabled automatically when certificate mode is enabled. But the power-on password / NVMe password still can be used normally in certificate mode if you have set one.

For certificate enrollment, go to: Certificate-based BIOS Authentication .

Enter the BIOS menu with certificate

Once you have enrolled the certificate, you can enter the BIOS menu with the certificate.

1. Restart the computer. When the logo screen is displayed, press F1 to enter the BIOS menu.
2. The QR code is displayed. Scan the QR code to save the request data and send the request data to IT admin by e-mail or phone.

> **Note:**
>
> If you choose to authenticate without the QR code, save the request data in a USB key and send the request data to IT admin by e-mail or phone.

3. Enter the unlock code provided by IT admin and click **OK**.

> **Note:**
>
> - The unlock encode is a one-time password and is valid only during logon prompt (in one power-on cycle) for up to two hours.
> - If you click **Skip**, you can enter the BIOS setup menu without BIOS management authority. But certificate reset is allowed.

Reset certificate

The enrolled certificate cannot be disabled. You can reset or remove it:

1. Restart the computer. When the logo screen is displayed, press F1.
2. Enter the BIOS menu with the certificate or skip the certification authentication process.
3. Select **Security** > **Reset Certificate**.
4. Follow the on-screen instructions to enter the reset code provided by IT admin.

ThinkShield secure wipe

ThinkShield secure wipe feature is ThinkPad Drive Erase Utility for the Resetting the Cryptographic Key and the Erasing the Solid State Drive. This feature provides you a secure method to wipe all the data on your computer.

1. Restart the computer. When the logo screen is displayed, press F12.
2. Select **App Menu** > **ThinkShield secure wipe**, and then follow the on-screen instructions.

Chapter 4 Help and support

This chapter provides solutions to some hardware and software issues.

Error messages

An error message is displayed for each error detected in POST or system operation. Refer to the error messages in the table below to solve your computer problems.

If you see a message that is not included in the following table, record the error message first, then shut down the computer and call Lenovo for help. See Lenovo Customer Support Center on page 34.

Message	Solution
0190: Critical low-battery error	The computer turned off because the battery power is low. Connect the ac power adapter to the computer and charge the batteries.
0191: System Security - Invalid remote change requested	The system configuration change has failed. Confirm the operation and try again.
0199: System Security - Security password retry count exceeded.	This message is displayed when you enter a wrong supervisor password more than three times. Confirm the supervisor password and try again.
0271: Check Date and Time settings.	The date or the time is not set in the computer. Enter the UEFI BIOS menu and set the date and time.
210x/211x: Detection/Read error on HDDx/SSDx	The storage drive is not working. Reinstall the storage drive. If the problem still exists, replace the storage drive.
Error: The non-volatile system UEFI variable storage is nearly full.	**Note:** This error indicates that the operating system or programs cannot create, modify, or delete data in the non-volatile system UEFI variable storage due to insufficient storage space after POST. The non-volatile system UEFI variable storage is used by the UEFI BIOS and by the operating system or programs. This error occurs when the operating system or programs store large amounts of data in the variable storage. All data needed for POST, such as UEFI BIOS setup settings, chipset, or platform configuration data, are stored in a separate UEFI variable storage.

Message	Solution
	Press F1 after the error message is displayed to enter the UEFI BIOS menu. A dialog asks for confirmation to clean up the storage. If you select “Yes”, all data that were created by the operating system or programs will be deleted except global variables defined by the Unified Extensible Firmware Interface Specification. If you select “No”, all data will be kept, but the operating system or programs will not be able to create, modify, or delete data in the storage. If this error happens at a service center, Lenovo-authorized service personnel will clean up the non-volatile system UEFI variable storage using the preceding solution.

Battery-charge LED indicator diagnosis

The battery-charge LED indicator (hereafter referred to as LED indicator) blinks to help you diagnose and solve some computer problems.

Indicator blinking patterns

The LED indicator blinks amber first and then white continually, consisting of different blinking patterns. Each blinking pattern corresponds to an error code. For example, when the LED indicator blinks amber once 🟠 and then blinks white twice ⚪⚪, the blinking pattern 🟠⚪⚪ corresponds to error code 0001.

Note:

- The LED indicator blinks automatically only when the error in the following table occurs.
- The LED indicator blinks continually until the computer turns off. If you need to interrupt the process, press power button for a few seconds.
- We recommend that you speak to our Customer Support Center before attempting to service the computer yourself so that you can be directed to the correct documentation and repair information. It might be recommended to have a Lenovo-authorized service provider repair your computer depending on the complexity of the error or fault.

Refer to the blinking patterns and error codes in the table below to solve your computer problems.

Blinking patterns	Error codes	Solutions
🟠⚪⚪	0001: Reset error (platform reset not de-asserted)	**1.** Do the following to perform a hard reset:

Blinking patterns	Error codes	Solutions
		a. Disconnect your computer from ac power. **b.** Insert a straightened paper clip into the hole to cut off power supply temporarily. **c.** Restart the computer with ac power connected. **2.** If step 1 does not work, replace the system board (service provider only).
●○○○	0002: Internal bus error	Replace the system board (service provider only).
●○○○○	0003: Non-Volatile Memory programming error in system power circuit	Replace the system board (service provider only).
●●○	0282: Memory module error	**1.** Reinstall or replace the memory module. **2.** If step 1 does not work, replace the system board (service provider only).
●●○○	0283: PCI resource error	**1.** Remove PCIe devices (the M.2 card, PCIe card, and so on) (service provider only). **2.** If step 1 does not work, replace the system board (service provider only).
●●○○○	0284: TCG-compliant functionality-related error (might be the BIOS code validation failure)	Replace the system board (service provider only).
●●○○○○	0285: TCG-compliant functionality-related error (might be the TPM initialization failure)	Replace the system board (service provider only).
●●●○	0286: Integrated graphics error	Replace the system board (service provider only).
●●●○○	0287: Discrete graphics error	**1.** Reinstall or replace the discrete graphics card (service provider only).

Blinking patterns	Error codes	Solutions
		2. If step 1 does not work, replace the system board (service provider only).
●●●○○○	0288: Computer display error	**1.** Reconnect the display cable on both the system board side and the computer display side (servi ce provider only) and check the display panel. **2.** If step 1 does not work, connect an external display to your computer and check the status (customer or service provider). ● If the external display works, replace the display panel (servi ce provider only). ● If the external display does not work, replace the system board (service provider only).
●●●●○	0281: General embedded controller error	Replace the system board (service provider only).

Diagnostics tool

This section provides introduction to a set of diagnostics and troubleshooting tools at Lenovo Support Web site, the Vantage app, and in your computer. They can help you diagnose common software and hardware issues.

The following table lists these diagnostics tools and the recommended conditions for each tool.

Diagnostics tool	Recommended scenario
Troubleshoot and diagnose at Lenovo Support Web site	You want to have an online troubleshooting or scan of hardware and drivers on your computer.
Hardware scan	● Your computer is installed with the Vantage app. ● You want to perform basic examinations of the hardware components.
UEFI Diagnostics tool	● You cannot log in to the operating system. ● Your computer cannot connect to the network.

Troubleshoot and diagnose at Lenovo Support Web site

Lenovo provides two different diagnosing options to help you identify and resolve problems on your computer.

1. Go to https://www.pcsupport.lenovo.com/ and enter your product name in the search box.
2. Click **Troubleshoot & Diagnose** and select from the following two options depending on your needs.
   - If you are unsure of the problem with your computer, it is recommended that you select **Easy** and follow on-screen instructions to get your firmware updated and obtain the hardware status.
   - If you have identified the problem on your computer, you can select **Custom** and follow on-screen instructions to resolve the problem.

   Note:

   - Before launching any automatic diagnosing process, a pop-up window will prompt you to install Lenovo Service Bridge. Lenovo Service Bridge helps to connect your computer with Lenovo diagnosing tools.
   - Lenovo Support Web site makes periodic updates of the sections to keep improving your experience with your computer. The Web site interface and descriptions of sections might be different from that on your actual interface.

If solutions cannot resolve problems on your computer, you can follow on-screen instructions to submit an e-ticket or contact Lenovo for professional assistance.

Hardware scan

Hardware scan is an effective hardware testing tool to help you identify existing hardware issues.

To run the Hardware scan:

1. Type **Vantage** in the Windows search box and then press Enter.
2. Click **Hardware scan** or **Support** > **Hardware scan**.
3. Select **QUICK SCAN** or **CUSTOMIZE** and then follow the on-screen instructions to run the hardware scan.

   Note:

   - The Quick Scan tool contains a pre-selected suite of tests that performs basic examinations of the hardware components found in the system. The Customize tool enables you to select one or several hardware components to perform the examinations.
   - Before selecting **QUICK SCAN**, click **Refresh Modules** to ensure that the list of hardware components is the components currently available for the computer.
4. If any hardware failure is detected, the result varies depending on the warranty status and varies by country or region. Follow the on-screen instructions to resolve the issue.

UEFI Diagnostics tool

UEFI Diagnostics tool enables you to view system information and identify hardware issues when you cannot log in to the operating system, or the computer cannot connect to the network.

To use the UEFI Diagnostics tool:

1. Connect your computer to ac power.
2. Turn on your computer, and press F10 immediately to enter the UEFI Diagnostics tool.
3. Follow the on-screen instructions to run the test.

4. Press Esc to exit the tool. Your computer will restart immediately.
5. If any hardware failure is detected and you are unable to locate and resolve the problem, you can call Lenovo Customer Support Center. See Call Lenovo on page 33.

Lenovo Memory Self Repair

Lenovo Memory Self Repair (hereafter referred to as repair tool) enables you to repair memory single-bit or single-row failure with internal redundant resources.

It is recommended that you use the repair tool in the following situations:

- The operating system is unstable, such as having blue screen error or system crash.
- Any application operates abnormally, such as crashing or quitting unexpectedly.
- Any test result indicates memory-related errors.

> **Note:**
>
> The repair tool can be used only when your computer can be turned on normally.

1. Restart the computer.
2. When the logo screen is displayed, trigger the repair tool by one of the following methods:
   - Press F4.
   - Press Enter to enter **Startup Interrupt Menu**, and then press F4.
   - Press F12 to enter **App Menu**, and then select **Lenovo Memory Self Repair**.
3. Read through the important information in the displayed window and click **Yes** to run the tool.
4. Check the repair result on the pop-up dialog box. There are three types of results.
   - **Memory Repaired**: it means that the memory failure is detected and repaired.
   - **Memory failure detected but repair was unsuccessful**: it means that the memory failure is detected but cannot be repaired.
   - **No failure detected**: it means that no memory failure is detected.

   If the issue persists, you can try again or contact Lenovo for additional support.
5. Click **Continue** to turn on the computer.

Related topics

Call Lenovo on page 33

Detect memory retraining

Memory retraining is a process to initialize the memory module and run diagnostic tests for the memory module in your computer.

The memory retraining might occur during POST if any of the following situations is detected:

- Total Memory Encryption setting change in the UEFI BIOS
- Memory Reference Code (MRC) change when the UEFI BIOS updates

When memory retraining occurs, the screen might be blank. You might see the LED indicators on Esc, F1, and F4 blinking sequentially to indicate the progress. Do not press the power button to interrupt the process. Wait a few minutes until the logo screen is displayed.

Windows label

Windows Genuine Microsoft label indicates the edition of Windows preinstalled on your computer and whether the device is preinstalled with or licensed for genuine Windows.

Your computer might have a Windows Genuine Microsoft label affixed to its cover depending on the following factors:

- Your geographic location
- Edition of Windows that is preinstalled

Go to https://www.microsoft.com/howtotell/Hardware.aspx for illustrations of the various types of Genuine Microsoft labels.

- In the People's Republic of China, the Genuine Microsoft label is required on all computer models preinstalled with any edition of the Windows operating system.
- In other countries and regions, the Genuine Microsoft label is required only on computer models licensed for Windows Pro editions.

The absence of a Genuine Microsoft label does not indicate that the preinstalled Windows version is not genuine. For details on how to tell whether your preinstalled Windows product is genuine, refer to the information provided by Microsoft at https://www.microsoft.com/howtotell/default.aspx.

There are no external, visual indicators of the Product ID or Windows version for which the computer is licensed. Instead, the Product ID is recorded in the computer firmware. Whenever a Windows product is installed, the installation program checks the computer firmware for a valid, matching Product ID to complete the activation.

In some cases, an earlier Windows version might be preinstalled under the terms of the Windows Pro edition license downgrade rights.

Call Lenovo

If you have tried to correct the problem yourself and still need help, you can call Lenovo Customer Support Center.

Before you contact Lenovo

Prepare the needed information before you contact Lenovo.

1. Record the problem symptoms and details:
   - What is the problem? Is it continuous or intermittent?
   - Any error message or error code?
   - What operating system are you using? Which version?
   - Which software applications were running at the time of the problem?
   - Can the problem be reproduced? If so, how?
2. Record the system information:
   - Product name.
   - Machine type and serial number on page 33.

Find your service QR code and serial number

This topic helps you find service QR code and serial number.

Scan the QR code on the base cover assembly to view the following information:

- Your product information and warranty status

- The latest Lenovo-verified drivers and software
- Troubleshooting and diagnosing solutions when hardware or software issue is encountered
- Customer support center and e-ticket entry for professional support

You can find your serial number via:

- **Dashboard** or **Device** in the **Vantage** app
- Serial-number label of your computer (shown as below illustration)

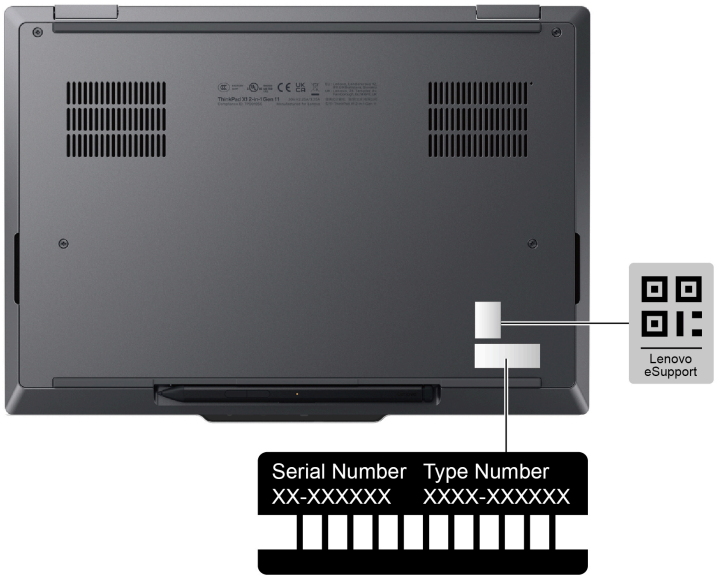

Lenovo Customer Support Center

During the warranty period, you can call Lenovo Customer Support Center for help.

Telephone numbers

For a list of the Lenovo Support phone numbers for your country or region, go to https://pcsupport.lenovo.com/supportphonelist for the latest phone numbers.

> **Note:**
>
> Phone numbers are subject to change without notice. If the number for your country or region is not provided, contact your Lenovo reseller or Lenovo marketing representative.

Services available during the warranty period

- Problem determination - Trained personnel are available to assist you with determining if you have a hardware problem and deciding what action is necessary to fix the problem.
- Lenovo hardware repair - If the problem is determined to be caused by Lenovo hardware under warranty, trained service personnel are available to provide the applicable level of service.
- Engineering change management - Occasionally, there might be changes that are required after a product has been sold. Lenovo or your reseller, if authorized by Lenovo, will make selected Engineering Changes (ECs) that apply to your hardware available.

Services not covered

- Replacement or use of parts not manufactured for or by Lenovo or nonwarranted parts

- Identification of software problem sources
- Configuration of UEFI BIOS as part of an installation or upgrade
- Changes, modifications, or upgrades to device drivers
- Installation and maintenance of network operating systems (NOS)
- Installation and maintenance of programs

For the terms and conditions of the Lenovo Limited Warranty that apply to your Lenovo hardware product, go to:

- https://www.lenovo.com/warranty/llw_02
- https://pcsupport.lenovo.com/warrantylookup

Chapter 5 CRU replacement

This section provides instructions on how to replace Customer Replaceable Units (CRUs).

What are CRUs

Customer Replaceable Units (CRUs) are parts that can be replaced by the customer. The computers contain the following types of CRUs:

- **Self-service CRUs**: Refer to parts that can be replaced easily by customer themselves or by trained service technicians at an additional cost.
- **Optional-service CRUs**: Refer to parts that can be replaced by customers with a greater skill level. Trained service technicians can also provide service to replace the parts under the type of warranty designated for the customer's machine.

If you intend on installing a CRU, Lenovo will ship the CRU to you. CRU information and replacement instructions are shipped with your product and are available from Lenovo at any time upon request. You might be required to return the defective part that is replaced by the CRU. When return is required: (1) return instructions, a prepaid shipping label, and a container will be included with the replacement CRU; and (2) you might be charged for the replacement CRU if Lenovo does not receive the defective CRU within thirty (30) days of your receipt of the replacement CRU. For full details, see the Lenovo Limited Warranty documentation at https://www.lenovo.com/warranty/llw_02.

CRU list

This topic provides the CRU list of your computer.

Self-service CRUs

- ac power adapter*
- Base cover assembly
- M.2 solid-state drive
- M.2 solid-state drive bracket
- Nano-SIM-card tray*
- Power cord*
- Lenovo Slim Pen 2*

Optional-service CRUs

- Built-in battery*
- Wireless WAN module*
- Wireless WAN module bracket* (for 4G wireless WAN module only)
- Captive bracket*

* for selected models

> **Note:**
>
> Replacement of any parts not listed above should be done by a qualified repair technician or by ensuring that you carefully follow all instructions provided by Lenovo. You can also find Lenovo-authorized repair facilities by going to https://support.lenovo.com/partnerlocator for more information.

Before you replace any CRU

Before replacing any CRU, ensure that you disable Fast Startup first and then disable the built-in battery.

Disable Fast Startup

Follow the instructions to disable Fast Startup.

1. Go to **Control Panel** and view by Large icons or Small icons.
2. Click **Power Options**, and then click **Choose what the power buttons do** on the left pane.
3. Click **Change settings that are currently unavailable** at the top.
4. If prompted by User Account Control (UAC), click **Yes**.
5. Clear the **Turn on fast startup** check box, and then click **Save changes**.

Disable the built-in battery

Follow the instructions to disable the built-in battery.

1. Connect the power adapter to your computer and power on.
2. Restart your computer. When the logo screen is displayed, immediately press F1 to enter the UEFI BIOS menu.
3. Select **Config** > **Power**. The **Power** submenu is displayed.
4. Select **Disable Built-in Battery** and press Enter.
5. Select **Yes** in the Setup Confirmation window.

   The built-in battery is disabled and the computer turns off automatically.
6. Disconnect the power adapter from your computer.

Wait three to five minutes to let the computer cool.

> **Note:**
>
> If your computer cannot enter the UEFI BIOS menu, you cannot disable the built-in battery. To ensure safety when you replace a CRU, it is recommended to do the following:

- For the built-in battery connected to the system board with cables: Disconnect the battery cables.
- For the CRUable built-in battery connected to the system board with comb connectors: Remove the battery. For the removal procedure, refer to the built-in battery replacement instructions in this documentation.
- For the non-CRUable built-in battery connected to the system board with comb connectors: Call Lenovo Customer Support Center for help.

To check whether the built-in battery on your computer is a CRU, see the CRU list in CRU replacement on page 36.

Replace a CRU

Follow the instructions to replace a CRU.

Base cover assembly

Follow the instructions to replace the base cover assembly.

Before you start, read *Generic Safety and Compliance Notices*.

> **Note:**
>
> Do not remove the base cover assembly in the following situations. Otherwise, there might be a risk of short circuits.
>
> - When your computer has the removable battery installed
> - When your computer is connected to ac power

For access, do the following:

1. Disable Fast Startup and the built-in battery. See Before you replace any CRU on page 37.
2. Turn off the computer and disconnect the computer from ac power and all connected cables.
3. Close the computer display and turn over the computer.

Tools needed:

- Phillips head screwdriver
- Pry tool

1. Remove the base cover assembly as shown below.

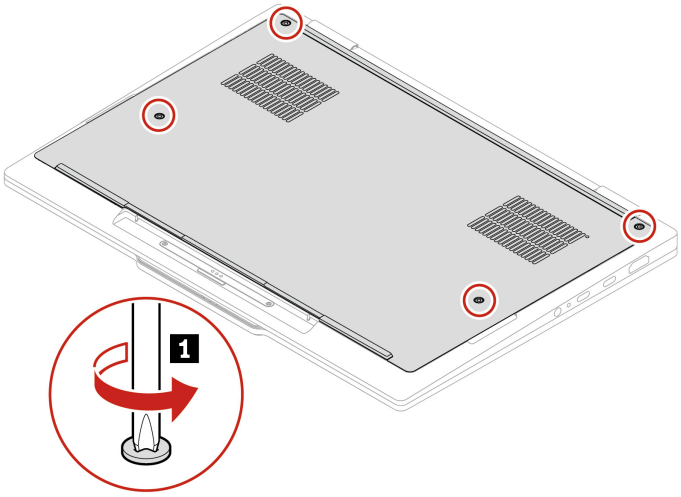

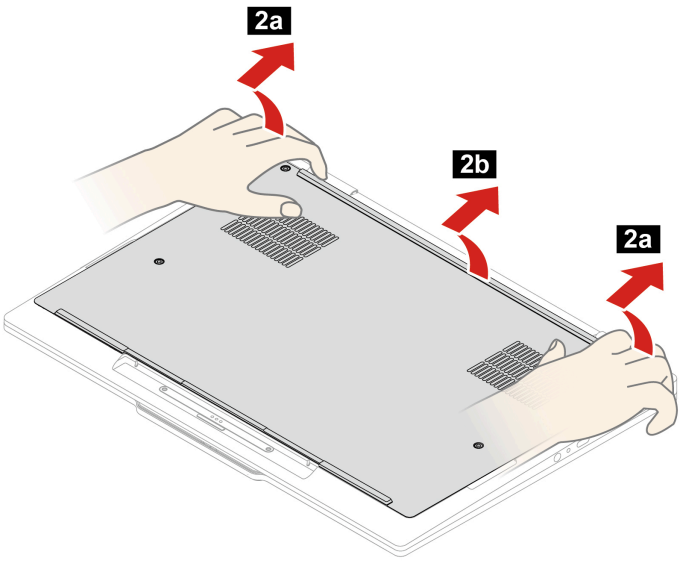

2. Install the base cover assembly as shown below.

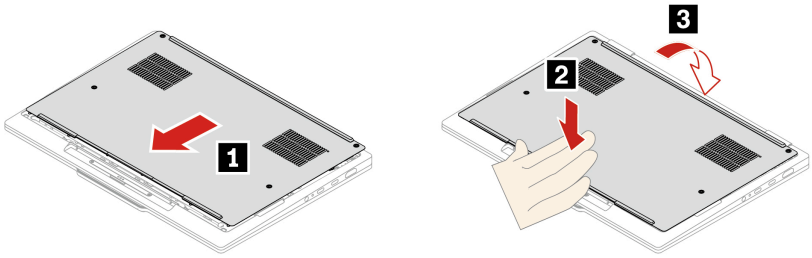

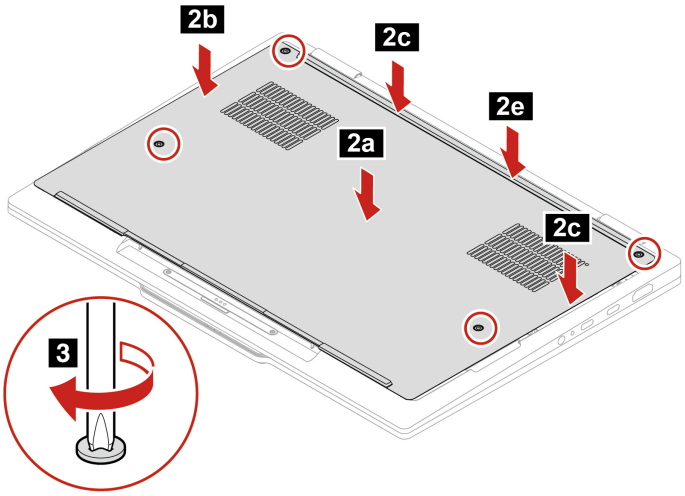

If the computer does not start up after you reinstall the base cover assembly, disconnect the ac power adapter and then reconnect it to the computer.

Built-in battery

Follow the instructions to replace the built-in battery.

Before you start, read *Generic Safety and Compliance Notices*.

CAUTION:

Use only the Lenovo-authorized battery specified for the computer. Any other battery could ignite or explode.

Batteries supplied by Lenovo for use with your product have been tested for compatibility and should only be replaced with approved parts. A battery other than the one specified by Lenovo, or a disassembled or modified battery may not be covered by warranty.

Battery abuse or mishandling can cause overheat, liquid leakage, or an explosion. To avoid possible injury:

- **Do not open, disassemble or service any battery unless you are competent to do so and ensure that you carefully follow all instructions provided by Lenovo.**
- **Do not crush or puncture the battery.**
- **Do not short-circuit the battery, or expose it to water or other liquids.**
- **Keep the battery away from children.**
- **Keep the battery away from fire.**
- **Stop using the battery if it is damaged, or if you notice any discharge or the buildup of foreign materials on the battery leads.**
- **Store the rechargeable batteries or products containing the rechargeable batteries at room temperature, charged to approximately 30 to 50% of capacity. We recommend that the batteries be charged about once per year to prevent overdischarge.**
- **Do not put the battery in trash that is disposed of in landfills. When disposing of the battery, comply with local ordinances or regulations.**
- **If the battery is incorrectly replaced, there is danger of an explosion. The battery contains a small amount of harmful substances.**

Note:

When the built-in battery is removed, certain system settings will be reset:

- The system date and time will be cleared. Windows will automatically restore the correct time via the internet once your computer connects to a network.
- All configured alarm settings will be lost.
- The power-on password will be cleared.
- The system management password will be cleared.

Lenovo recommends you use a qualified repair technician or ensure that you carefully follow all instructions provided by Lenovo. The Lenovo-authorized repair facilities or technicians recycle Lenovo batteries according to local laws and regulations. Please do not dispose of your battery with your household waste. For recycling information go to https://www.lenovo.com/recycling.

Attention:

Lenovo has no responsibility for the performance or safety of unauthorized batteries, and provides no warranties for failures or damage arising out of their use.

The Vantage app provides an automatic battery diagnostic test that determines if the built-in battery is defective. A built-in battery should not be replaced unless this diagnostic test shows that the battery is defective. The only exception to this is if the built-in battery is physically damaged or a customer is reporting a possible safety issue.

If the Vantage app is not installed on the computer, the customer should download and install the program to diagnose the built-in battery, before replacing a non-physically damaged built-in battery. Note that the replacement of a physically damaged built-in battery is not covered by the warranty.

For access, do the following:

1. Disable Fast Startup and the built-in battery. See Before you replace any CRU on page 37.
2. Turn off the computer and disconnect the computer from ac power and all connected cables.
3. Close the computer display and turn over the computer.
4. Remove the base cover assembly. See Base cover assembly on page 38.

Tool needed: Phillips head screwdriver

1. Remove the built-in battery as shown below.

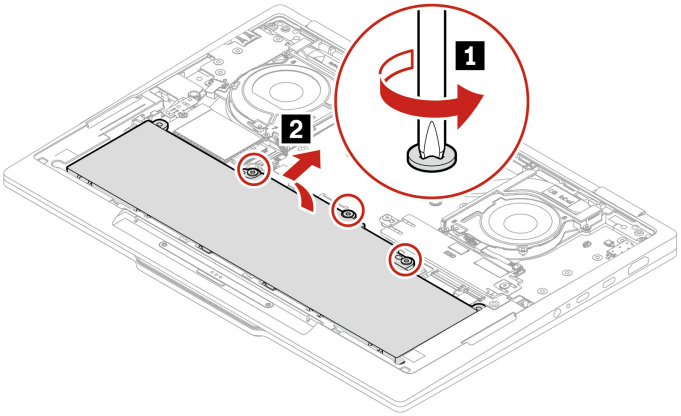

2. Before installing the built-in battery, thoroughly check the battery compartment and ensure that there are no foreign or sharp objects that could cause damage to the battery.
3. Install the built-in battery in reverse order.

   When installing:

   - Ensure that the connector is attached firmly.
   - Ensure that the base cover assembly is secured in place. Otherwise, the battery connection might fail.

Wireless WAN module and wireless WAN module bracket (for selected models)

Follow the instructions to replace the Wireless WAN module.

The following information is only for the computer with user-installable modules. Ensure that you use only a Lenovo-authorized wireless module specifically tested for this computer model. Otherwise, the computer will generate an error-code beep sequence when you turn on the computer.

Before you start, read *Generic Safety and Compliance Notices*.

Note:

- Wireless WAN ready model identifies that product has preinstalled wireless WAN antennas and allows a user-installable wireless WAN module.
- Only wireless WAN model or wireless WAN ready model is allowed to install the optional Lenovo wireless WAN module.

Attention:

Do not touch the contact edge of the wireless WAN module. Otherwise, the wireless WAN module might get damaged.

For access, do the following:

1. Disable Fast Startup and the built-in battery. See Before you replace any CRU on page 37.
2. Turn off the computer and disconnect the computer from ac power and all connected cables.
3. Close the computer display and turn over the computer.
4. Remove the base cover assembly. See Base cover assembly on page 38.

Tools needed:

- Phillips head screwdriver
- Pry tool

Type one – 4G wireless WAN module

1. Remove the captive bracket, wireless WAN module bracket and wireless WAN module as shown below.

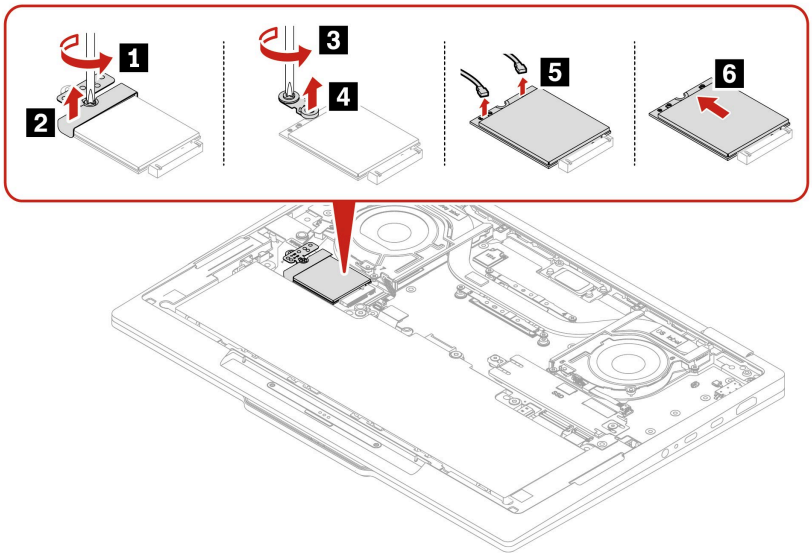

2. Install the captive bracket, wireless WAN module bracket and wireless WAN module in reverse order.

Type two – 5G wireless WAN module

1. Remove the captive bracket and wireless WAN module as shown below.

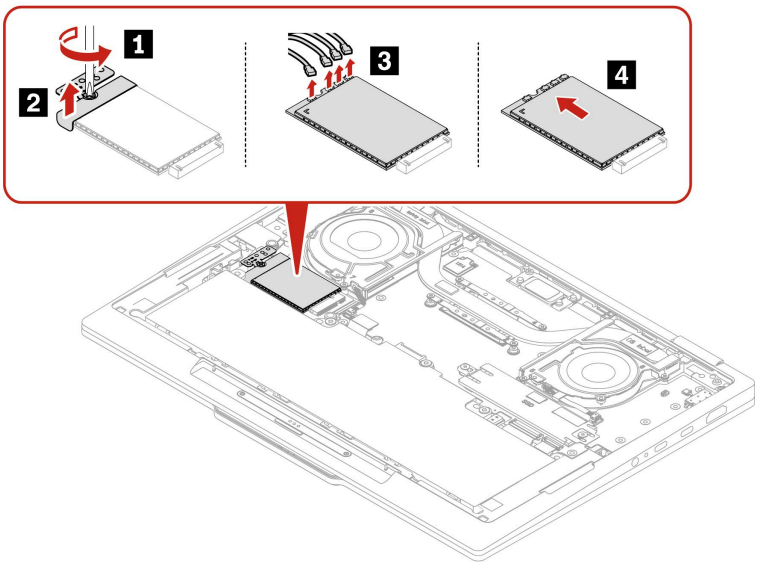

2. Install the captive bracket and wireless WAN module in reverse order.

Type three – captive bracket only

1. Remove the captive bracket as shown below.

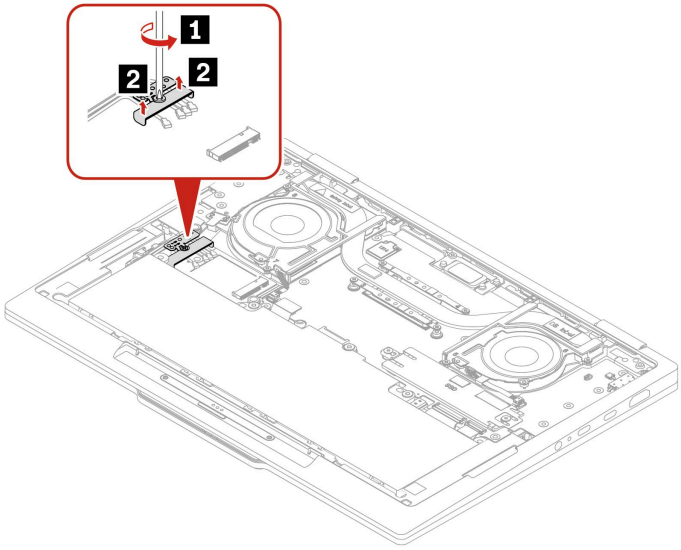

2. Install the captive bracket in reverse order.

Type four – captive bracket and wireless WAN module bracket

1. Remove the captive bracket and wireless WAN module bracket as shown below.

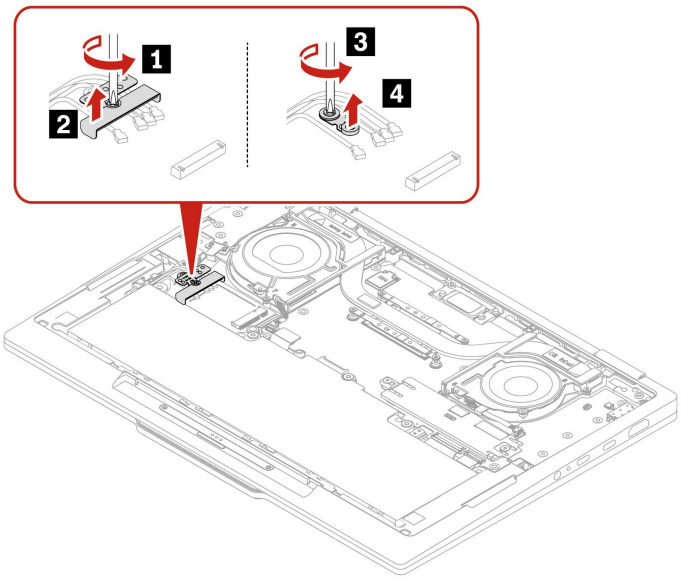

2. Install the captive bracket and wireless WAN module bracket in reverse order.

> **Note:**
>
> Wireless WAN module bracket is needed for 4G models only.
>
>

Antenna cable routing

The cable routing is different for 4G wireless WAN module and 5G wireless WAN module. Ensure that the antenna cables are installed appropriately when installing a wireless WWAN module.

Type one – 4G wireless WAN module

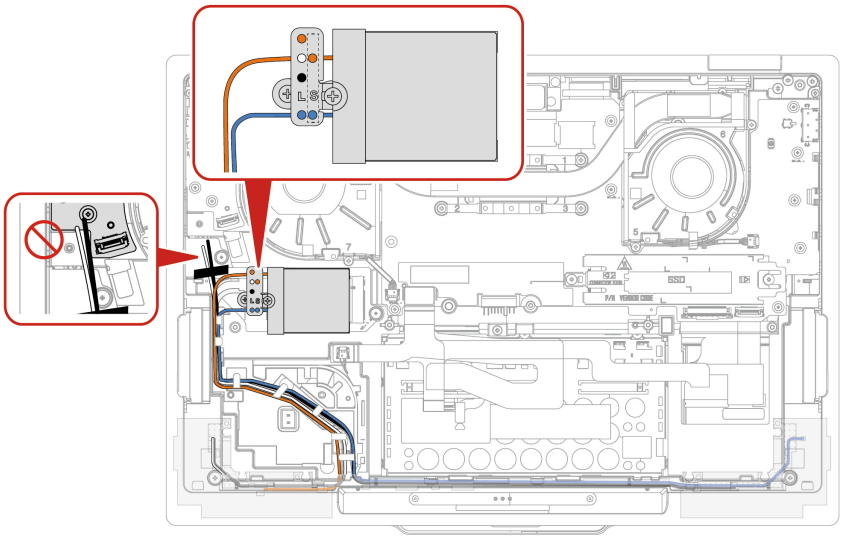

Type two – 5G wireless WAN module

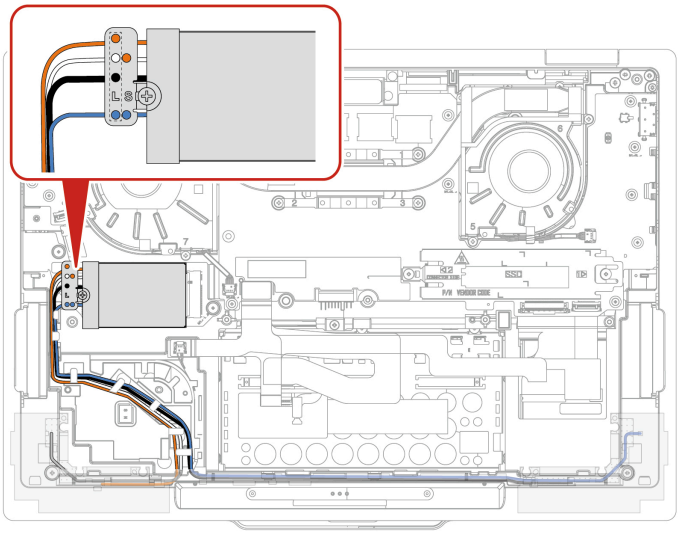

Note:

Do not remove the plastic cover from new antenna connectors until you install the new antennas.

M.2 solid-state drive, and M.2 solid-state drive bracket

Follow the instructions to replace the M.2 solid-state drive and M.2 solid-state drive bracket.

Before you start, read *Generic Safety and Compliance Notices*.

Attention:

If you replace an M.2 solid-state drive, you might need to install a new operating system.

The M.2 solid-state drive is sensitive. Inappropriate handling might cause damage and permanent loss of data.

When handling the M.2 solid-state drive, remove or insert the M.2 solid-state drive horizontally. Otherwise the slot might get damaged.

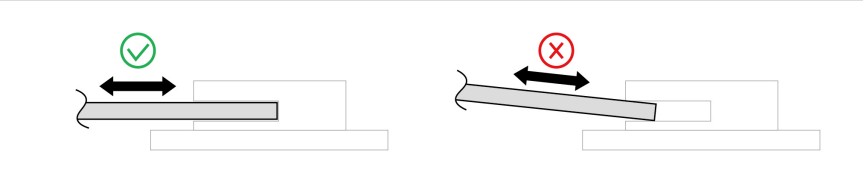

When handling the M.2 solid-state drive, observe the following guidelines:

- Replace the M.2 solid-state drive only for repair. The M.2 solid-state drive is not designed for frequent changes or replacement.
- Before replacing the M.2 solid-state drive, make a backup copy of all the data that you want to keep.
- Do not apply pressure to the M.2 solid-state drive.
- Do not touch the contact edge or circuit board of the M.2 solid-state drive. Otherwise, the M.2 solid-state drive might get damaged.
- Do not subject the M.2 solid-state drive to physical shocks or vibration. Put the M.2 solid-state drive on a soft material, such as cloth, to absorb physical shocks.

1. Disable Fast Startup and the built-in battery. See Before you replace any CRU on page 37.
2. Turn off the computer and disconnect the computer from ac power and all connected cables.
3. Close the computer display and turn over the computer.
4. Remove the base cover assembly. See Base cover assembly on page 38.

Tool needed: Phillips head screwdriver

Type one – short bracket

1. Remove the M.2 solid-state drive and M.2 solid-state drive bracket as shown below.

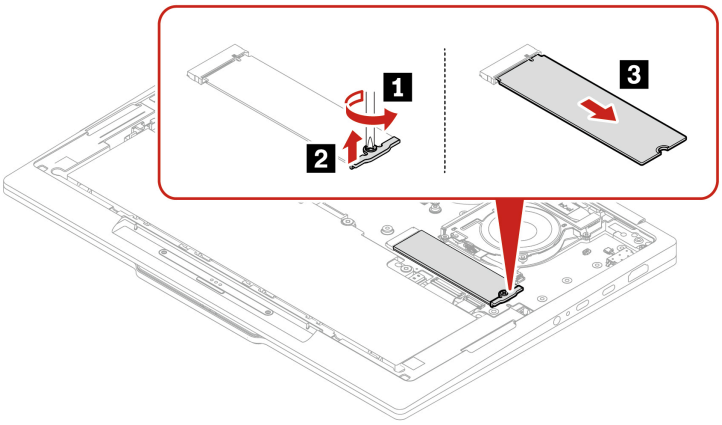

2. Install the M.2 solid-state drive and M.2 solid-state drive bracket in reverse order.

Type two – long bracket

1. Remove the M.2 solid-state drive and M.2 solid-state drive bracket as shown below.

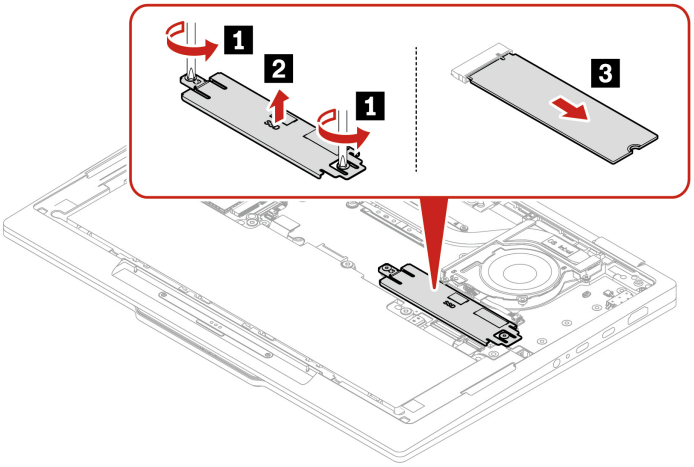

2. Install the M.2 solid-state drive and M.2 solid-state drive bracket in reverse order.

Note:

Ensure correct orientation of the bracket when installation.

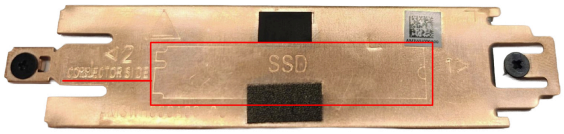

Appendix A Compliance information

This chapter provides the compliance information of your computer.

For compliance information, refer to *Regulatory Notice* at https://pcsupport.lenovo.com and *Generic Safety and Compliance Notices* at https://pcsupport.lenovo.com/docs/generic_notices.

Certification-related information

This section provides certification-related information, such as product name and machine type.

Product name	Compliance ID	Machine type(s)
ThinkPad X1 2-in-1 Gen 11	TP00171A	21V9 and 21VA

[1] for mainland China only

Further compliance information related to your product is available at https://www.lenovo.com/compliance.

Locate the UltraConnect wireless antennas

Your computer has an UltraConnect™ wireless antenna system. You can enable wireless communication wherever you are.

The following illustration shows the antenna locations on your computer:

1 Wireless LAN antenna (auxiliary)
2 Wireless LAN antenna (main)
3 Wireless WAN antenna (MIMO1)*
4 Wireless WAN antenna (main)*
5 Wireless WAN antenna (auxiliary)*
6 Wireless WAN antenna (MIMO2)*

* for selected models

Operating environment

This section provides information about the operating environment of your computer.

Maximum altitude (without pressurization)

3048 m (10 000 ft)

Temperature

- Operating: 5°C to 35°C (41°F to 95°F)
- Storage and transportation in original shipping packaging: -20°C to 60°C (-4°F to 140°F)
- Storage without packaging: 5°C to 43°C (41°F to 109°F)

Note:

When you charge the battery, its temperature must be no lower than 10°C (50°F).

Relative humidity

- Operating: 8% to 95% at wet-bulb temperature 23°C (73°F)
- Storage and transportation: 5% to 95% at wet-bulb temperature 27°C (81°F)

Laser safety information

This device is classified as a Class 1 consumer laser product per *IEC 60825-1:2014*, *EN 60825-1:2014+A11:2021*, and *EN 50689:2021*. This device complies with FDA performance standards for laser products except for conformance with *IEC 60825-1 Ed. 3*, as described in *Laser Notice No. 56*, dated May 8, 2019.

CAUTION:

This device contains a laser that could be damaged during repair or disassembly, which could result in hazardous exposure to infrared laser emissions.

Appendix B Important notice for Quebec consumers

In regard to section 79.18 of Quebec's Regulation respecting the application of the Consumer Protection Act, Lenovo in no way guarantees the availability of (a) replacement parts; (b) repair services; and (c) information necessary to maintain or repair the goods. For up-to-date information on the technical support and parts available for your purchase, please consult **https://support.lenovo.com/ca/en**.

En ce qui concerne l'article 79.18 du Règlement d'application de la Loi sur la protection du consommateur du Québec, Lenovo ne garantit en aucune façon la disponibilité des éléments suivants:(a) les pièces de rechange; (b) les services de réparation; et (c) les renseignements nécessaires à l'entretien à la réparation du bien. Pour obtenir des renseignements à jour sur le soutien technique et les pièces disponibles pour votre achat, veuillez consulter **https://support.lenovo.com/ca/fr**.

Appendix C Accessibility features

Lenovo is committed to making information technology accessible to everyone, including individuals with hearing, vision, mobility, cognitive, or speech disabilities. To get the most up-to-date and detailed accessibility features information for the product, go to https://support.lenovo.com/docs/product_accessibility_features.

Appendix D Notice for USB connector name update

The USB Implementers Forum published a revision of the guideline for USB connector names in September, 2022. Lenovo follows the revised guideline and updates USB connector names accordingly. You can refer to the table below for naming update details.

Current name	**Previous name**
USB-A connector (Hi-Speed USB)	USB-A 2.0 connector
USB-A connector (USB 5Gbps)	USB-A 3.2 Gen 1 connector
USB-A connector (USB 10Gbps)	USB-A 3.2 Gen 2 connector
USB-A connector (USB 5Gbps, Always On USB)	Always on USB-A 3.2 Gen 1 connector
USB-A connector (USB 10Gbps, Always On USB)	Always on USB-A 3.2 Gen 2 connector
USB-C connector (USB 5Gbps)	USB-C (3.2 Gen 1) connector
USB-C connector (USB 10Gbps)	USB-C (3.2 Gen 2) connector
USB-C connector (USB 20Gbps)	USB 3.2 Gen 2x2
USB-C connector (USB4 20Gbps)	USB 4 Gen 2x2
USB-C connector (USB4 40Gbps)	USB-C (USB 4) connector
USB-C connector (Thunderbolt 3)	USB-C (Thunderbolt 3) connector
USB-C connector (Thunderbolt 4)	USB-C (Thunderbolt 4) connector

Appendix E Notices and trademarks

Notices

Lenovo may not offer the products, services, or features discussed in this document in all countries. Consult your local Lenovo representative for information on the products and services currently available in your area. Any reference to a Lenovo product, program, or service is not intended to state or imply that only that Lenovo product, program, or service may be used. Any functionally equivalent product, program, or service that does not infringe any Lenovo intellectual property right may be used instead. However, it is the user's responsibility to evaluate and verify the operation of any other product, program, or service.

Lenovo may have patents or pending patent programs covering subject matter described in this document. The furnishing of this document does not give you any license to these patents. You can send license inquiries, in writing, to:

Lenovo (United States), Inc.
8001 Development Drive
Morrisville, NC 27560
U.S.A.
Attention: Lenovo Director of Licensing

LENOVO PROVIDES THIS PUBLICATION "AS IS" WITHOUT WARRANTY OF ANY KIND, EITHER EXPRESS OR IMPLIED, INCLUDING, BUT NOT LIMITED TO, THE IMPLIED WARRANTIES OF NON-INFRINGEMENT, MERCHANTABILITY OR FITNESS FOR A PARTICULAR PURPOSE. Some jurisdictions do not allow disclaimer of express or implied warranties in certain transactions, therefore, this statement may not apply to you.

Changes are made periodically to the information herein; these changes will be incorporated in new editions of the publication. To provide better service, Lenovo reserves the right to improve and/or modify the products and software programs described in the manuals included with your computer, and the content of the manual, at any time without additional notice.

The software interface and function and hardware configuration described in the manuals included with your computer might not match exactly the actual configuration of the computer that you purchase. For the configuration of the product, refer to the related contract (if any) or product packing list, or consult the distributor for the product sales. Lenovo may use or distribute any of the information you supply in any way it believes appropriate without incurring any obligation to you.

The products described in this document are not intended for use in implantation or other life support applications where malfunction may result in injury or death to persons. The information contained in this document does not affect or change Lenovo product specifications or warranties. Nothing in this document shall operate as an express or implied license or indemnity under the intellectual property rights of Lenovo or third parties. All information contained in this document was obtained in specific environments and is presented as an illustration. The result obtained in other operating environments may vary.

Lenovo may use or distribute any of the information you supply in any way it believes appropriate without incurring any obligation to you.

Any references in this publication to non-Lenovo Web sites are provided for convenience only and do not in any manner serve as an endorsement of those Web sites. The materials at those Web sites are not part of the materials for this Lenovo product, and use of those Web sites is at your own risk.

Any performance data contained herein was determined in a controlled environment. Therefore, the result obtained in other operating environments may vary significantly. Some measurements may have been made on development-level systems and there is no guarantee that these measurements will be the same on generally available systems. Furthermore, some measurements may have been

estimated through extrapolation. Actual results may vary. Users of this document should verify the applicable data for their specific environment.

This document is copyrighted by Lenovo and is not covered by any open source license, including any Linux® agreement(s) which may accompany software included with this product. Lenovo may update this document at any time without notice.

For the latest information or any questions or comments, contact or visit the Lenovo Web site:

https://pcsupport.lenovo.com

Trademarks

Lenovo, Lenovo logo, ThinkPad, ThinkPad logo, and TrackPoint are trademarks of Lenovo. Intel, and Thunderbolt are trademarks of Intel Corporation or its subsidiaries in the U.S. and/or other countries. Linux is the registered trademark of Linus Torvalds in the U.S. and other countries. Microsoft, Microsoft Teams, Windows, Windows Hello, One Drive, Outlook, Skype, Office 365, Direct3D, BitLocker, and are trademarks of the Microsoft group of companies. Dolby, Dolby Audio and Dolby Atmos are trademarks of Dolby Laboratories Licensing Corporation. The terms HDMI and HDMI High-Definition Multimedia Interface are trademarks or registered trademarks of HDMI Licensing LLC in the United States and other countries. USB-C® is registered trademarks of USB Implementers Forum. Wi-Fi and Miracast are registered trademarks of Wi-Fi Alliance. All other trademarks are the property of their respective owners.