# CX2

## CX2E0RA/10-080V

**Area Sen, H=800mm-10mm pitch,E+R,I+V**

**AREA SENSORS WITH HIGH RESOLUTION AND COMPACT HOUSING WITH DIGITAL AND ANALOGUE OUTPUT**

# OVERVIEW

- Parallel beams and floating crossbeams with variable amplitude
- Synchronization by cable. Pitch 5, 10 and 20mm
- Control height up 480mm (pitch 5mm) and up 960mm (pitch10mm and 20mm)
- Maximum operating distance up to 3m (for 5mm pitch) and 6m (for 10mm and 20 pitch)
- Digital outputs NPN and PNP ; analogue current output (4…20mA) and analogue voltage output (0..10V), mix outputs : digital PNP and analogue voltage output (0..10V)
- Adjustment by teach-in , 2 levels of adjustment
- Blanking function . Available analogue versions TOP BEAM

# TECHNICAL FEATURES

Detection properties

| | |
|---|---|
| Nominal sensing distance | 0,3 … 6m |
| Beams space | 10mm |
| controlled height | 800mm |
| minimum detectable object | Ø 10mm |

| | |
|---|---|
| number of rays | 81 |
| Sensitivity adjustment | Teach-in by wire |

Application

| | |
|---|---|
| Function Principle | emitter/receiver |

Outputs

| | |
|---|---|
| Output type | 0,,,10V + 4,,,20mA |
| Output Function | positive/negative slope |
| Switching frequency | 14,7Hz |

Electrical data

| | |
|---|---|
| Operating Voltage | 16,8... 30Vdc |
| No-Load supply current | ≤330mA |
| Load current | < 100mA |
| Leakage current | ≤ 10µA |
| Output voltage drop | < 1,5V @ 100mA |
| Max ripple content | < 1,2Vpp |
| LED indicators | Blue, red and yellow (emitter) - green, red and yellow (receiver) |
| Time delay before availability | < 3s |
| Short-circuit protection | Yes |
| Reverse Polarity Protection | Yes |

| | |
|---|---|
| Emission | Infrared (880nm) |
| Interference to external light | IEC EN 60947-5-2 |
| Impulsive Overvoltage Protection | Yes |

Mechanical data

| | |
|---|---|
| Dimensions | 20mm x 809mm x 35mm |
| Housing material | Aluminium |
| Weight | 2250g |
| Connections | M12 4pin + cable PVC 200mm ; M12 8pin + cable PVC 200mm |
| Active Head Material | PMMA |
| Operating temperature | -10°C…+ 55° C (without freeze) |
| Storage temperature | - 25°C…+ 60° C (without freeze) |

Test/Approvals

| | |
|---|---|
| Approvals | CE, cULus |
| EMC compatibility | IEC 60947-5-2 |
| Shocks and vibrations | IEC EN 60947-5-2 |
| Degree of protection | IP67 |

Accessories

| | |
|---|---|
| Supplied Accessories | ST151 fixing kit |

Generical Data

| | |
|---|---|
| Dimensions | 809x36x20 |
| Operating Temperature | -10°C…+ 55° C (without freeze) |
| Mechanical Protection | IP67 |

# CONNECTIONS

Eletrical diagram

## CX2E0

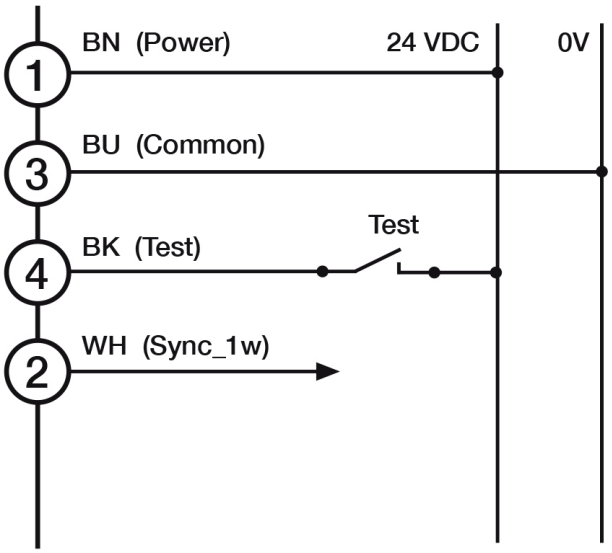


## CX2RA

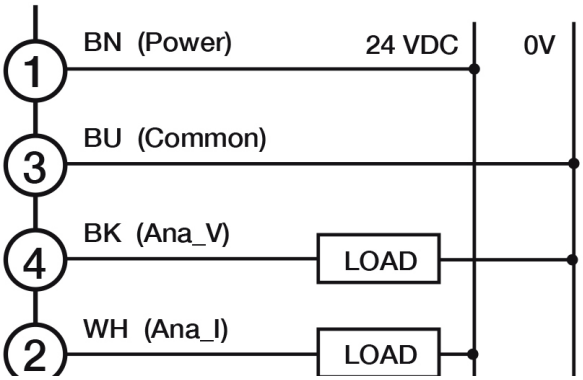

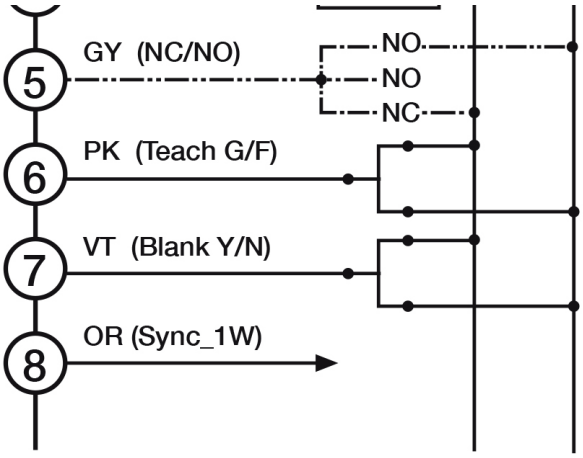


| | | | |
|---|---|---|---|
| G | coarse calibration | F | fine calibration |
| BK | black | BU | blue |
| BN | brown | GY | gray |
| RD | red | WH | white |
| PK | pink | VT | violet |
| OR | orange | | |

Connector

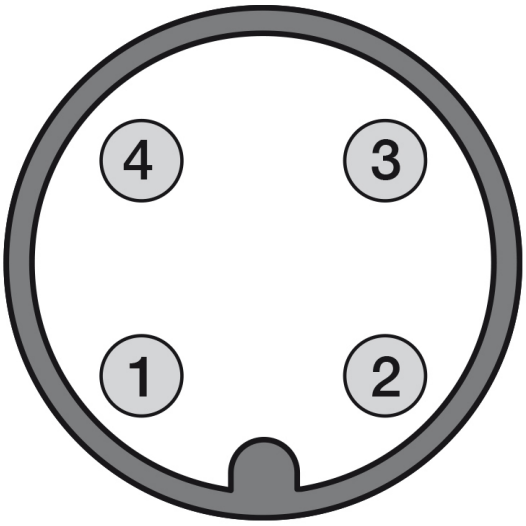


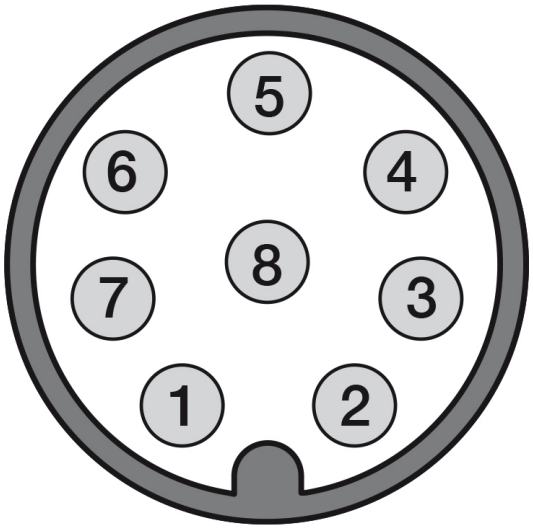


# OTHERS

Dimensions

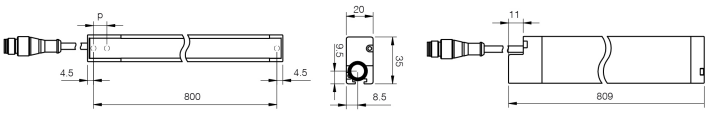


H (barrier height) = h (controlled height) + 9 mm

**Datasensing S.r.l.**
Strada S.Caterina, 235
41122 Modena (MO)
Tel. 059 420411
Fax 059 253973
E-mail
info@datasensing.com

**date of printing**
25/10/2026
03:22:16