CX2

CX2E0RF/10-032V

Area Sen, H=320mm-10mm pitch,E+R,PNP+V

AREA SENSORS WITH HIGH RESOLUTION AND COMPACT HOUSING WITH DIGITAL AND ANALOGUE OUTPUT

OVERVIEW

- Parallel beams and floating crossbeams with variable amplitude
- Synchronization by cable. Pitch 5, 10 and 20mm
- Control height up 480mm (pitch 5mm) and up 960mm (pitch10mm and 20mm)
- Maximum operating distance up to 3m (for 5mm pitch) and 6m (for 10mm and 20 pitch)
- Digital outputs NPN and PNP ; analogue current output (4…20mA) and analogue voltage output (0..10V), mix outputs : digital PNP and analogue voltage output (0..10V)
- Adjustment by teach-in , 2 levels of adjustment
- Blanking function . Available analogue versions TOP BEAM

TECHNICAL FEATURES

Detection properties

Nominal sensing distance	0,3 … 6m
Beams space	10mm
controlled height	320mm
minimum detectable object	Ø 5mm

number of rays	33
Sensitivity adjustment	Teach-in by wire

Application

Function Principle	emitter/receiver

Outputs

Output type	PNP + 0...10V
Output Function	NO/NC + positive/negative slope
Switching frequency	33,7Hz

Electrical data

Operating Voltage	16,8... 30Vdc
No-Load supply current	≤330mA
Load current	< 100mA
Leakage current	≤ 10µA
Output voltage drop	< 1,5V @ 100mA
Max ripple content	< 1,2Vpp
LED indicators	Blue, red and yellow (emitter) - green, red and yellow (receiver)
Time delay before availability	< 3s
Short-circuit protection	Yes
Reverse Polarity Protection	Yes

Emission	Infrared (880nm)
Interference to external light	IEC EN 60947-5-2
Impulsive Overvoltage Protection	Yes

Mechanical data

Dimensions	20mm x 329mm x 35mm
Housing material	Aluminium
Weight	750g
Connections	M12 4pin + cable PVC 200mm ; M12 8pin + cable PVC 200mm
Active Head Material	PMMA
Operating temperature	-10°C…+ 55° C (without freeze)
Storage temperature	- 25°C…+ 60° C (without freeze)

Test/Approvals

Approvals	CE, cULus
EMC compatibility	IEC 60947-5-2
Shocks and vibrations	IEC EN 60947-5-2
Degree of protection	IP67

Accessories

Supplied Accessories	ST151 fixing kit

Generical Data

Dimensions	329x36x20
Operating Temperature	-10°C…+ 55° C (without freeze)
Mechanical Protection	IP67

CONNECTIONS

Eletrical diagram

CX2E0

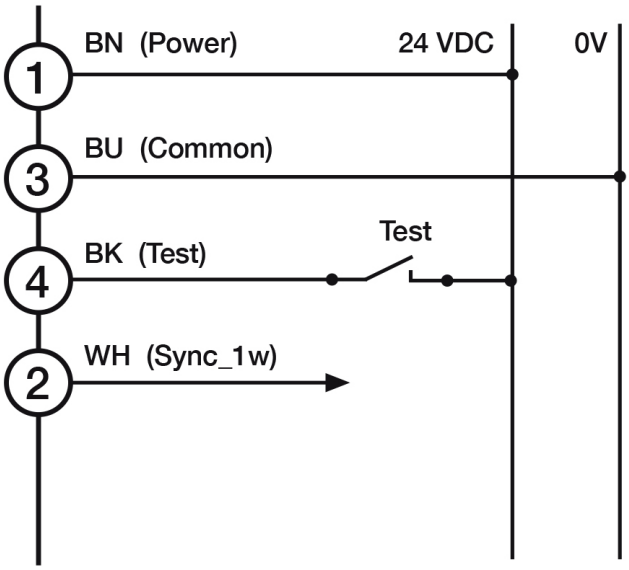

CX2RF

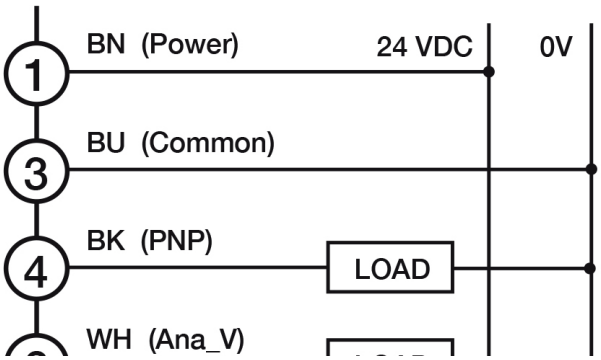

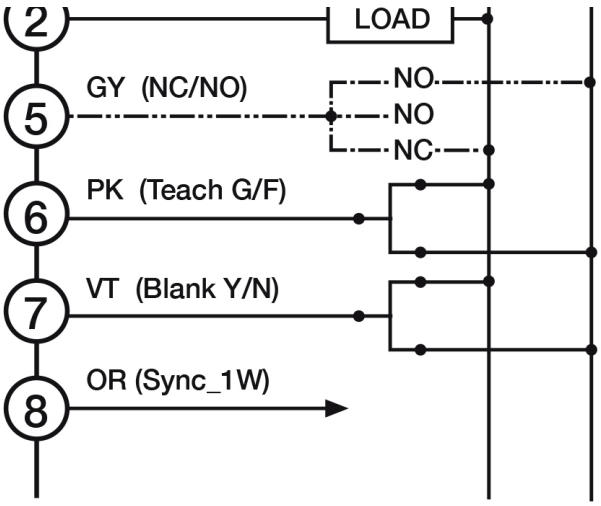

G	coarse calibration	F	fine calibration
BK	black	BU	blue
BN	brown	GY	gray
RD	red	WH	white
PK	pink	VT	violet
OR	orange		

Connector

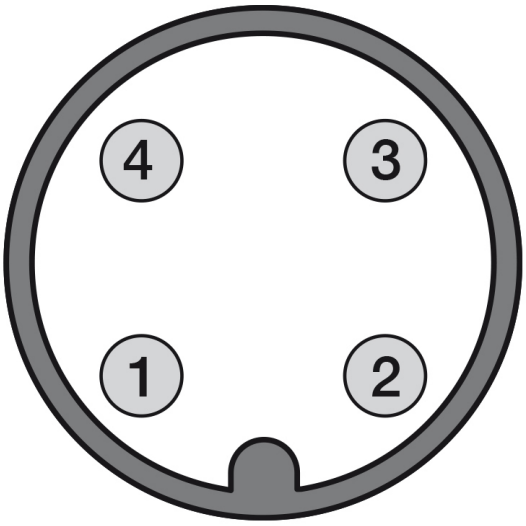

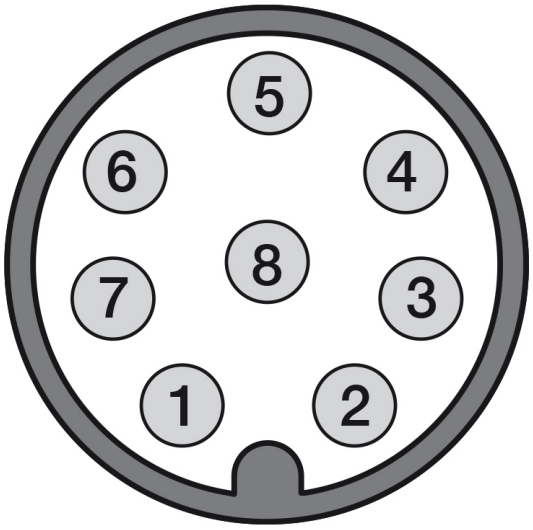

OTHERS

Dimensions

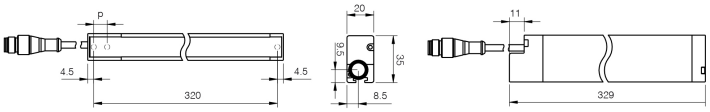

H (barrier height) = h (controlled height) + 9 mm

Datasensing S.r.l.
Strada S.Caterina, 235
41122 Modena (MO)
Tel. 059 420411
Fax 059 253973
E-mail
info@datasensing.com

date of printing
25/10/2026
03:22:33