CX0

CX0E1RP/10-016V

Area Sen, H=160mm-10mm pitch,E+R,PNP

AREA SENSORS WITH HIGH RESOLUTION AND COMPACT HOUSING

OVERVIEW

- Total crossbeam through all the optics
- Crossed area 160 and 320mm
- Pitch 5mm and 10mm
- Operating distance up to 3m (for 5mm pitch) and 6m (for 10mm pitch)
- 2 digital NPN and PNP outputs (teach-in model available only with PNP logic) NO/NC configurable
- Available with Teach in adjustment or with external trimmer
- High switching frequency to detection
- Intrinsic synchronism by cable (Teach-in models)

TECHNICAL FEATURES

Detection properties

Nominal sensing distance	0,5 … 6m
Beams space	10mm
controlled height	160mm
minimum detectable object	Ø 5mm

number of rays	17
Sensitivity adjustment	Teach-in by wire

Application

Function Principle	emitter/receiver

Outputs

Output type	PNP
Output Function	NO/NC
Switching frequency	135Hz

Electrical data

Operating Voltage	16,8... 30Vdc
No-Load supply current	≤330mA
Load current	< 100mA
Leakage current	≤ 10µA
Output voltage drop	< 1,5V @ 100mA
Max ripple content	< 1,2Vpp
LED indicators	Blue, red and yellow (emitter) - green, red and yellow (receiver)
Time delay before availability	200ms
Short-circuit protection	Yes
Reverse Polarity Protection	Yes

Emission	Infrared (880nm)
Interference to external light	IEC EN 60947-5-2
Impulsive Overvoltage Protection	Yes

Mechanical data

Dimensions	20mm x 169mm x 35mm
Housing material	Aluminium
Weight	450g
Connections	M12 4pin + cable PVC 200mm ; M12 5pin + cable PVC 200mm
Active Head Material	PMMA
Operating temperature	-10°C…+ 55° C (without freeze)
Storage temperature	- 25°C…+ 60° C (without freeze)

Test/Approvals

Approvals	CE, cULus
EMC compatibility	IEC 60947-5-2
Shocks and vibrations	IEC EN 60947-5-2
Degree of protection	IP67

Accessories

Supplied Accessories	ST151 fixing kit

Generical Data

Dimensions	169x36x20
Operating Temperature	-10°C…+ 55° C (without freeze)
Mechanical Protection	IP67

CONNECTIONS

Eletrical diagram

CX0E0

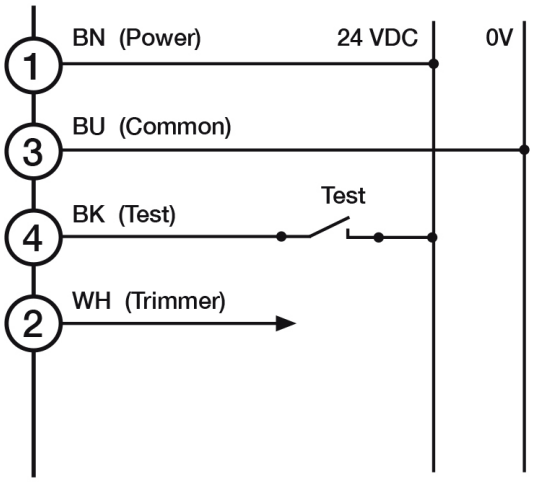

CX0BP

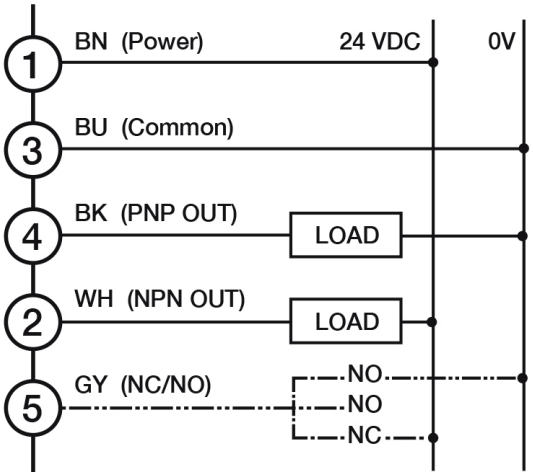

Connector

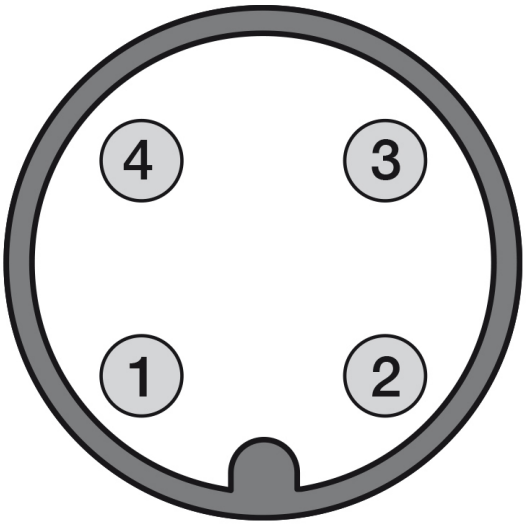

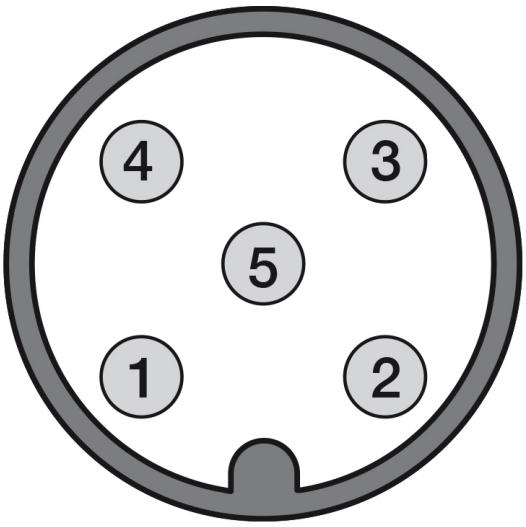

OTHERS

Dimensions

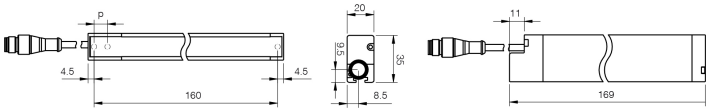

H (barrier height) = h (controlled height) + 9 mm

Datasensing S.r.l.
Strada S.Caterina, 235
41122 Modena (MO)
Tel. 059 420411
Fax 059 253973
E-mail
info@datasensing.com

date of printing
25/10/2026
03:19:24