# RX

## RXR/0T-3A

**Photo.Maxi,Relay-NO/NC,M12 plug,Receiver**

**MAXI WITH STATIC OUTPUT DC OR WITH RELAY OUTPUT AC/DC**

# OVERVIEW

- Models: diffuse reflection, retro-reflective, polarized, through-beam and background suppression
- Series with high performances and wide possibilities of installation
- High sensing distance and very small dimensions
- Relay output or multifunctional DECOUT®
- Timer function delay on, delay off, one shot; trimmer for sensitivity adjustment
- Switch reducing the emission for fine detection in through-beam types
- LED alignment indicator with 360° visibility, 2 LED indicators (stable signal, output)
- M12 standard plug cable exit; axial and right angle brackets

# TECHNICAL FEATURES

Detection properties

| | |
|---|---|
| Nominal sensing distance | 16-32m selectable with switch |
| Thermal drift of Sr | 10% Sr |
| Repeat Accuracy | 5% |

Application

| | |
|---|---|
| Function Principle | Receiver |

| | |
|---|---|
| Optic position | Axial |

Outputs

| | |
|---|---|
| Output type | Relay SPST NO/NC |
| Output Function | NO/NC |
| Switching frequency | 25Hz |
| Response time | 20ms |

Electrical data

| | |
|---|---|
| Operating Voltage | 20...60VDC /20...253VAC/50-60Hz |
| No-Load supply current | ≤ 30mARMS |
| Load current | 3A-250Vac/3A-30Vdc (750VA/90W) |
| Max ripple content | ≤10% |
| LED indicators | Red (output status) o (alineament), Green (stability) |
| Time delay before availability | ≤200ms |
| Reverse Polarity Protection | Yes |
| Emission | LED Infrared (880nm) |
| Interference to external light | ≥ 10000lux (incandescent lamp) |
| Impulsive Overvoltage Protection | Yes |

Mechanical data

| | |
|---|---|
| Dimensions | 26x86,6x50 |
| Housing material | PC |
| Weight | 75g |
| Connections | M12 plug |
| Active Head Material | PMMA |
| Operating temperature | - 25°C…+ 70°C ( without freeze) |
| Diameter/Dimension | Cubic |

Test/Approvals

| | |
|---|---|
| Approvals | CE |
| EMC compatibility | EN 60947-5-2 |
| Shocks and vibrations | Vibration IEC 60068-2-6 / Shock IEC 60068-2-28 |
| Degree of protection | IP65 |

Accessories

| | |
|---|---|
| Supplied Accessories | ST80 mounting bracket and screws |

Generical Data

| | |
|---|---|
| Dimensions | 26x86,6x50 |
| Operating Temperature | - 25°C…+ 70°C (Without freeze) |
| Mechanical Protection | IP65 |

# CONNECTIONS

Eletrical diagram

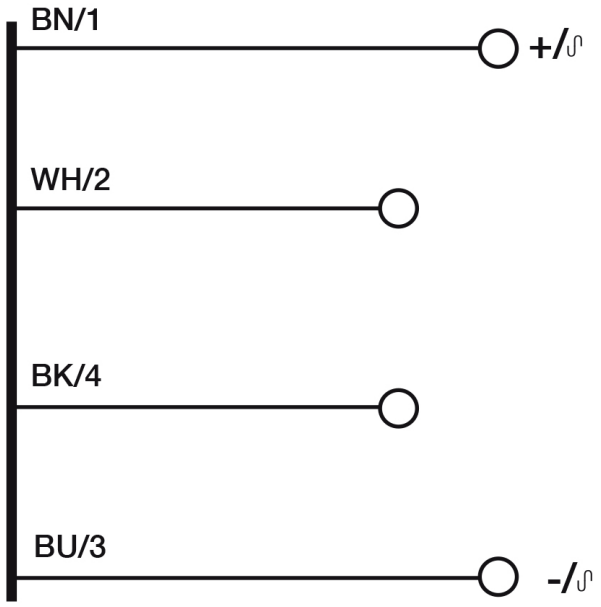


Connector

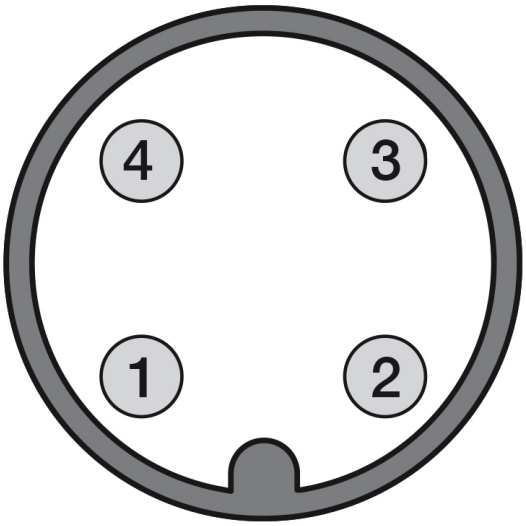


# OTHERS

## Dimensions

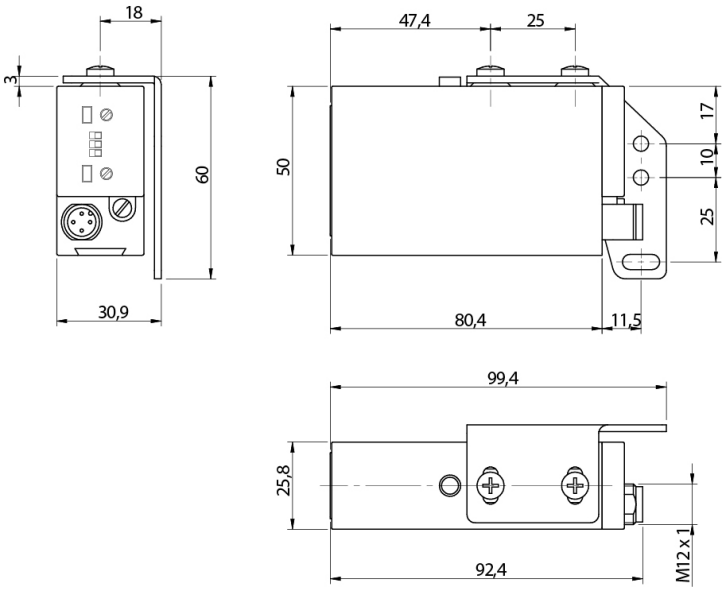


## Response curves

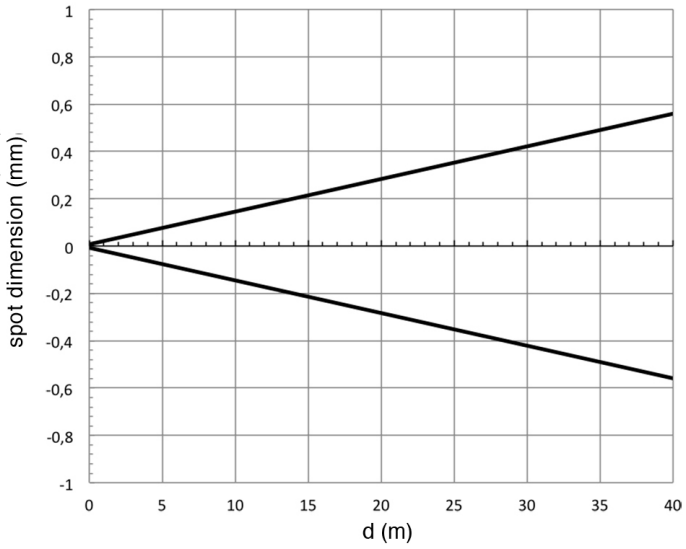


**Datasensing S.r.l.**
Strada S.Caterina, 235
41122 Modena (MO)
Tel. 059 420411
Fax 059 253973
E-mail
info@datasensing.com

**date of printing**
25/10/2026
03:50:07