RX

RX8/0T-1B37

Photo.Maxi,NPN/PNP-NO/NC,M12 plug,Diff.

MAXI WITH STATIC OUTPUT DC OR WITH RELAY OUTPUT AC/DC

OVERVIEW

- Models: diffuse reflection, retro-reflective, polarized, through-beam and background suppression
- Series with high performances and wide possibilities of installation
- High sensing distance and very small dimensions
- Relay output or multifunctional DECOUT®
- Timer function delay on, delay off, one shot; trimmer for sensitivity adjustment
- Switch reducing the emission for fine detection in through-beam types
- LED alignment indicator with 360° visibility, 2 LED indicators (stable signal, output)
- M12 standard plug cable exit; axial and right angle brackets

CE

TECHNICAL FEATURES

Detection properties

Nominal sensing distance	4,5m
Thermal drift of Sr	10% Sr
Repeat Accuracy	5%
Sensitivity adjustment	Trimmer

Application

Function Principle	Diffuse reflection (long distance, >600mm)
Notes	white target Kodak 90% 400 x 400mm EG=1,5
Optic position	Axial

Outputs

Output type	Decout NPN/PNP Selectable Decout NO/NC Selectable
Output Function	Decout NO/NC Selectable
Switching frequency	500Hz
Response time	1ms

Electrical data

Operating Voltage	10…30VDC
No-Load supply current	≤ 25mA
Load current	≤100mA
Leakage current	≤ 10µA
Output voltage drop	≤1,2V@Iload=100mA
Max ripple content	≤10%
LED indicators	Red (output status) o (alineament), Green (stability)
Time delay before availability	≤200ms
Short-circuit protection	Yes

Reverse Polarity Protection	Yes
Emission	LED Infrared (880nm)
Interference to external light	≥ 5000lux (incandescent lamp)

Mechanical data

Dimensions	26x86,6x61
Housing material	PC
Weight	90g
Connections	M12 plug
Active Head Material	PMMA
Operating temperature	- 25°C…+ 70°C (without freeze)
Diameter/Dimension	Cubic

Test/Approvals

Approvals	CE cULus
EMC compatibility	EN 60947-5-2
Shocks and vibrations	Vibration IEC 60068-2-6 / Shock IEC 60068-2-28
Degree of protection	IP65

Accessories

Supplied Accessories	ST81 mounting bracket and screws

Generical Data

Dimensions	26x86,6x61
Operating Temperature	- 25°C…+ 70°C (Without freeze)
Mechanical Protection	IP65

CONNECTIONS

Eletrical diagram

NPN

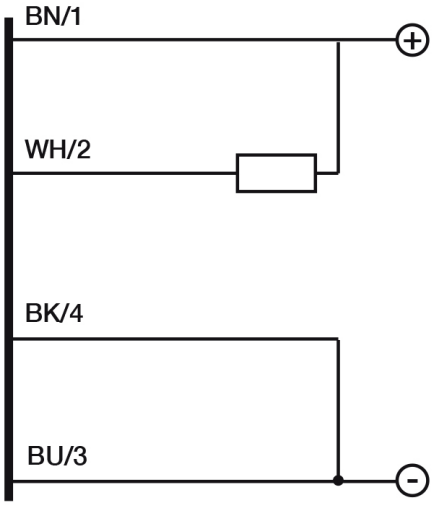

PNP

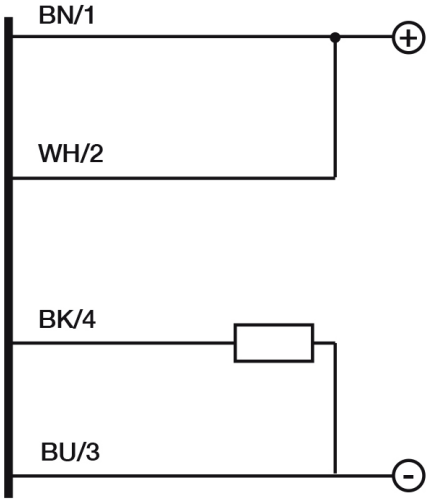

Connector

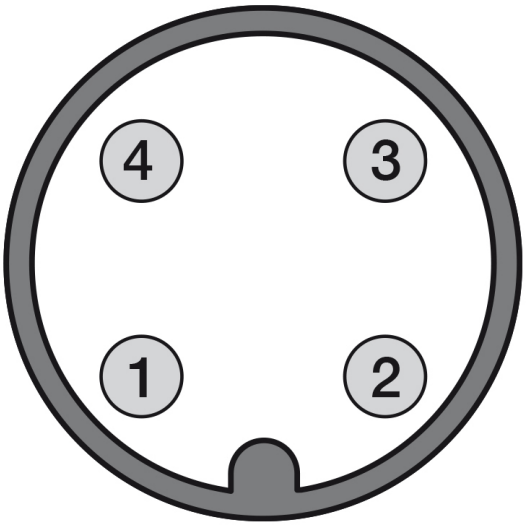

OTHERS

Dimensions

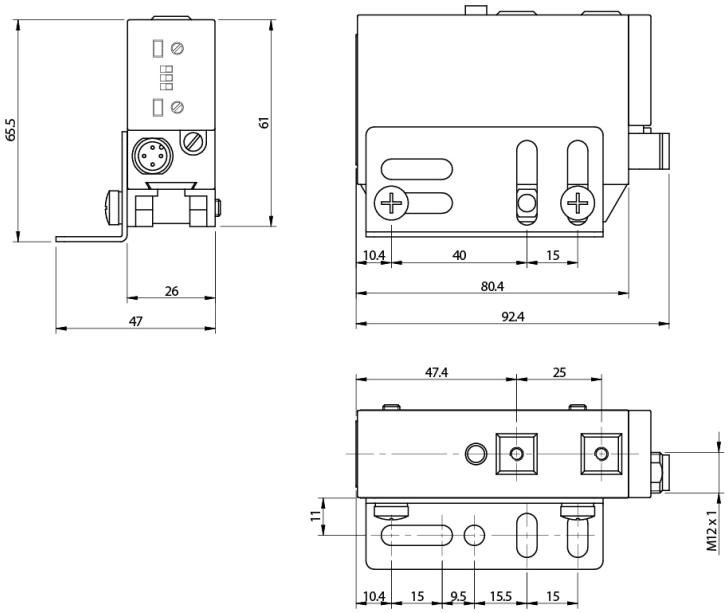

Response curves

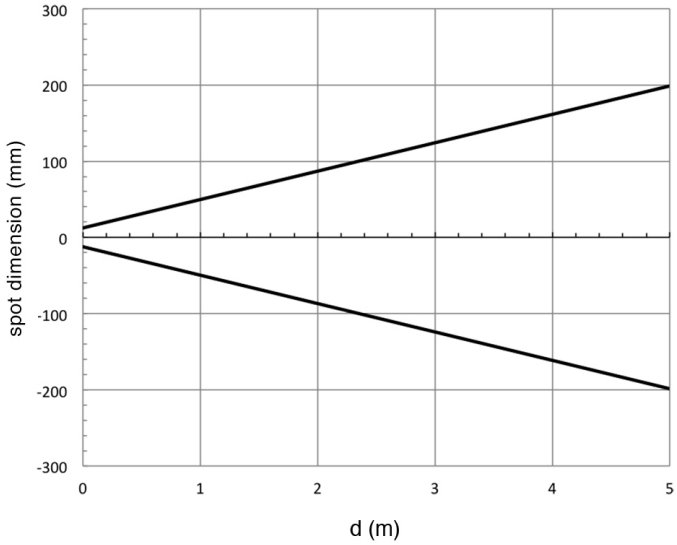

Datasensing S.r.l.
Strada S.Caterina, 235
41122 Modena (MO)
Tel. 059 420411
Fax 059 253973
E-mail
info@datasensing.com

date of printing
25/10/2026
03:49:48