# SA

## SA8/0P-1K

**Photo.M18,PNP-NO/NC,M12 plug 90°,Diffuse**

**M18 DC HIGH PERFORMANCES WITH REAR ADJUSTMENT**

# OVERVIEW

- Wide range of models: diffuse, retro-reflective, polarized and fixed-focus
- All models are available with sensitivity adjustment trimmer
- Double LED indicator (ON/OFF - supply)
- NO/NC selectable output
- IP65 protection degree
- Complete protection against electrical damage
- Wide range of plugs, accessories and reflectors available
- Approvals: CE

# TECHNICAL FEATURES

Detection properties

| | |
|---|---|
| Nominal sensing distance | 1m |
| Thermal drift of Sr | 10% Sr |
| Repeat Accuracy | 5% |
| Sensitivity adjustment | Trimmer |

## Application

| | |
|---|---|
| Function Principle | Diffuse reflection (long distance, >600mm) |
| Notes | white target Kodak 90% 200 x 200mm |
| Optic position | Axial |

## Outputs

| | |
|---|---|
| Output type | PNP L/D Selectable |
| Output Function | L/D Selectable |
| Switching frequency | 1Khz |
| Response time | 500µs |

## Electrical data

| | |
|---|---|
| Operating Voltage | 10…30VDC |
| No-Load supply current | ≤ 30mA |
| Load current | ≤100mA |
| Leakage current | ≤10µA |
| Output voltage drop | ≤2V@Iload=100mA |
| Max ripple content | ≤10% |
| LED indicators | Green (powerON), Yellow (Status output) |
| Time delay before availability | ≤200ms |
| Short-circuit protection | Yes |

| | |
|---|---|
| Reverse Polarity Protection | Yes |
| Emission | LED Infrared (880nm) |
| Interference to external light | 3.000lux (incandescent lamp), 10.000lux (sunlight) |

Mechanical data

| | |
|---|---|
| Dimensions | 21,4mmx90mm |
| Housing material | Nickel-plated brass / Nylon plug |
| Weight | 100g |
| Connections | M12 plug 90° |
| Active Head Material | PMMA |
| Tightening torque | 25Nm |
| Operating temperature | - 25°C…+ 70° C (without freeze) |
| Diameter/Dimension | M18 |

Test/Approvals

| | |
|---|---|
| Approvals | CE |
| EMC compatibility | EN 60947-5-2 |
| Shocks and vibrations | Vibration IEC 60068-2-6 / Shock IEC 60068-2-27 |
| Degree of protection | IP67 |

Accessories

| | |
|---|---|
| Supplied Accessories | Nuts M18 x 1 |

Generical Data

| | |
|---|---|
| Dimensions | 21,4mmx90mm |
| Operating Temperature | - 25°C…+ 70°C (Without freeze) |
| Mechanical Protection | IP67 |

# CONNECTIONS

Eletrical diagram

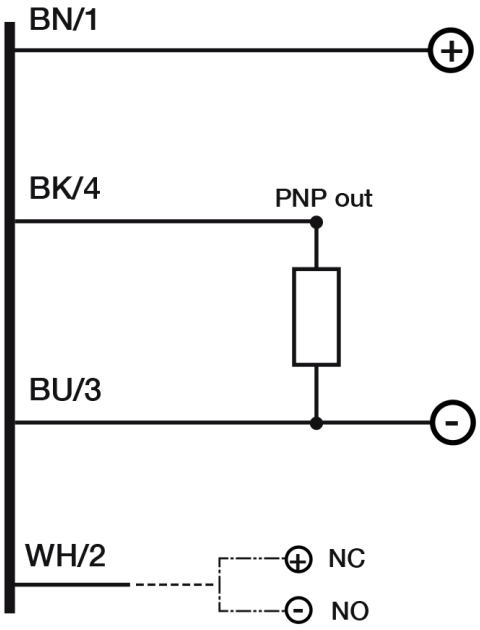


Connector

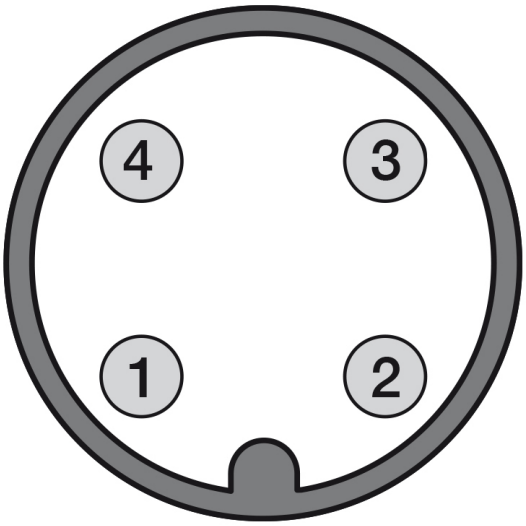


# OTHERS

Dimensions

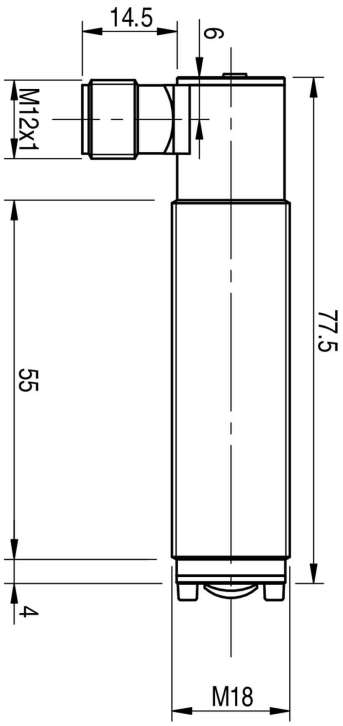


Response curves

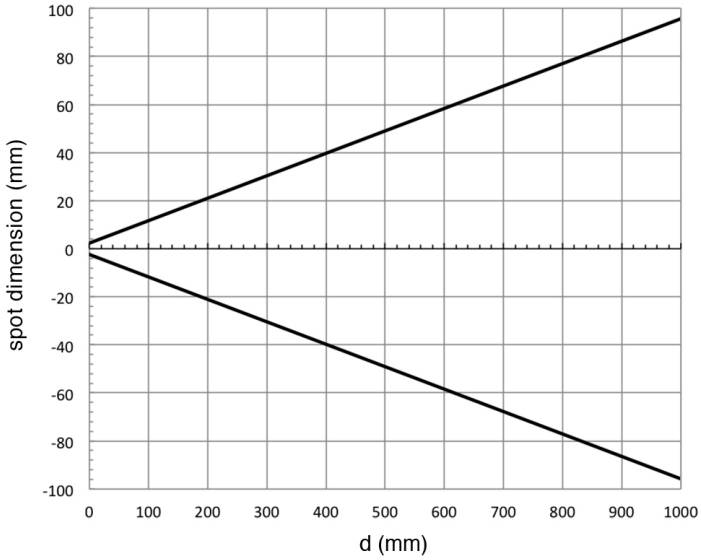


**Datasensing S.r.l.**
Strada S.Caterina, 235
41122 Modena (MO)
Tel. 059 420411
Fax 059 253973
E-mail
info@datasensing.com

**date of printing**
25/10/2026
03:41:57