SS-SP

SP2/0P-1E

Photo.M18,PNP-NO/NC,M12 plug,Diffuse

M18 DC WITH LATERAL ADJUSTMENT

OVERVIEW

- Models with side sens. adjustment on axial and right angle optic
- LO/DO selectable output
- ATEX models, cat. 3, available on request
- LED status indicator for all versions
- Complete protection against electrical damages
- IP67 protection degree for all models
- Approvals: CE and cULus listed

TECHNICAL FEATURES

Detection properties

Nominal sensing distance	100mm
Thermal drift of Sr	≤10% Sr
Repeat Accuracy	5%
Sensitivity adjustment	No

Application

Function Principle	Diffuse reflection (short distance, ≤200mm)
Notes	white target Kodak 90% 100 x 100mm
Optic position	Radial 90°

Outputs

Output type	PNP L/D Selectable
Output Function	L/D Selectable
Switching frequency	250Hz
Response time	2ms

Electrical data

Operating Voltage	10…30VDC
No-Load supply current	≤ 30mA
Load current	≤100mA
Leakage current	≤10µA
Output voltage drop	≤1,2V@Iload=100mA
Max ripple content	≤10%
LED indicators	Yellow (status output)
Time delay before availability	≤200ms
Short-circuit protection	Yes

Reverse Polarity Protection	Yes
Emission	LED Infrared (880nm)
Interference to external light	3000lux (incandescent lamp), 10000lux (sunlight)
Impulsive Overvoltage Protection	Yes

Mechanical data

Dimensions	M18 x 1 /L =75,7mm
Housing material	Nickel plated brass / PC plug
Weight	100g
Connections	M12 plug
Active Head Material	PMMA
Tightening torque	25Nm
Operating temperature	- 25°C…+ 70° C (Without freeze)
Diameter/Dimension	M18

Test/Approvals

Approvals	CE cULus
EMC compatibility	EN 60947-5-2
Shocks and vibrations	Vibration IEC 60068-2-6 / Shock IEC 60068-2-27
Degree of protection	IP67

Accessories

Supplied Accessories	nuts M18 x 1

Generical Data

Dimensions	M18 x 1 /L =75,7mm
Operating Temperature	- 25°C…+ 70°C (Without freeze)
Mechanical Protection	IP67

CONNECTIONS

Eletrical diagram

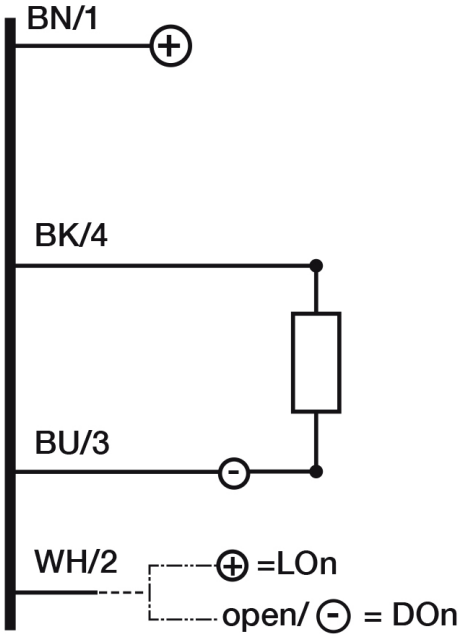

Connector

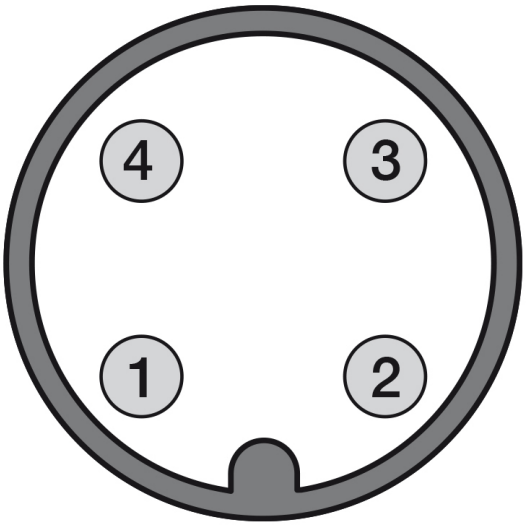

OTHERS

Dimensions

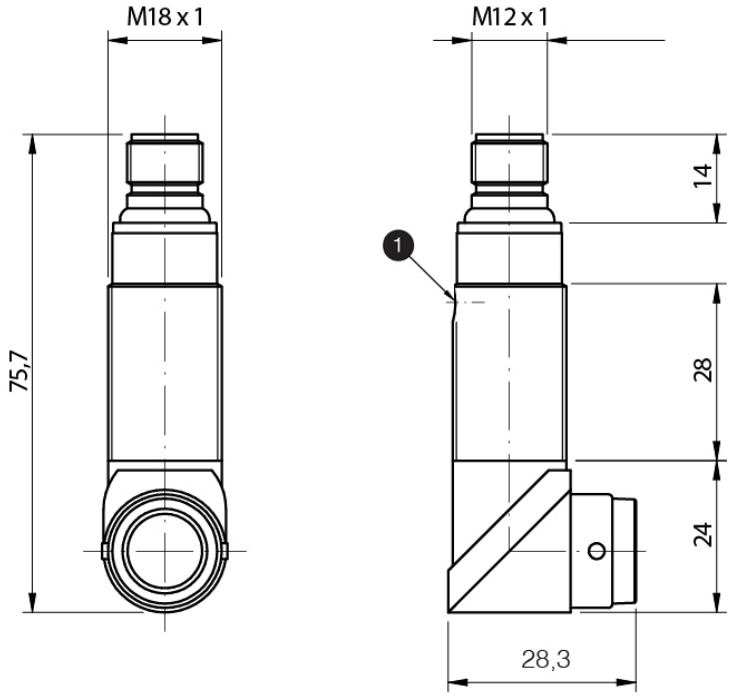

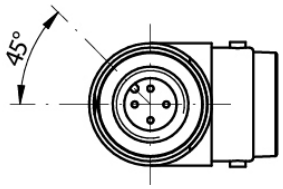

1 trimmer

Response curves

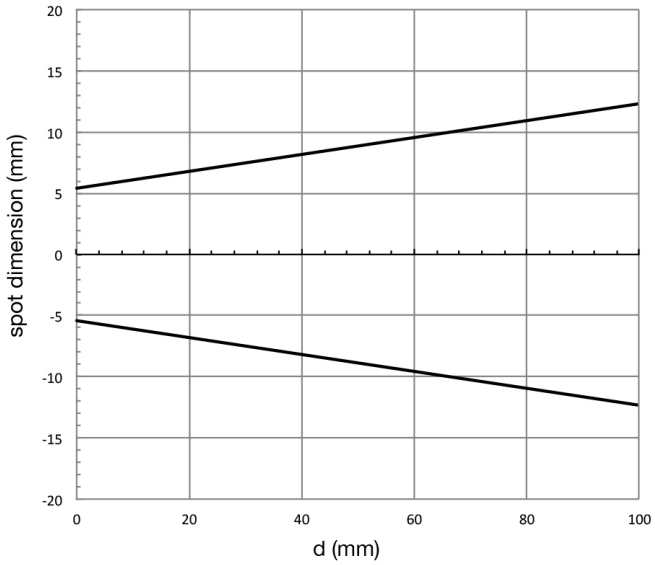

S.r.l.
Strada S.Caterina, 235
41122 Modena (MO)
Tel. 059 420411
Fax 059 253973
E-mail
info@datasensing.com

printing
25/10/2026
08:42:31