# QM

## QMI9/0P-0F

**Photo.Mini,PNP-NO/NC,M8 plug,Diffuse**

**MINIATURIZED PHOTOELECTRIC SENSORS WITH HIGH PERFORMANCE**

# OVERVIEW

- Cubic miniaturized photoelectric high-performance sensors with long sensing distance
- 2 kHz switching frequency, background suppression with mechanical adjustment
- Wide range of models: diffuse reflection with short, medium and long sensing distance, polarized, reflective for transparent objects, through-beam and background suppression
- Available with cable and M8 plug exit or with M8-M12 pig-tail
- Selectable LO/DO output state
- Completely filled with resin (except background suppression models)
- Complete protection against electrical damages

# TECHNICAL FEATURES

Detection properties

| | |
|---|---|
| Nominal sensing distance | 1,5m |
| Thermal drift of Sr | ≤10% Sr |
| Repeat Accuracy | 5% |
| Sensitivity adjustment | Trimmer |

Application

| | |
|---|---|
| Function Principle | Diffuse reflection (long distance, >600mm) |
| Notes | white target Kodak 90% 400 x 400mm |
| Optic position | Radial 90° |

Outputs

| | |
|---|---|
| Output type | PNP L/D Selectable |
| Output Function | L/D Selectable |
| Switching frequency | 1Khz |
| Response time | 500µs |

Electrical data

| | |
|---|---|
| Operating Voltage | 10…30VDC |
| No-Load supply current | ≤ 30mA |
| Load current | ≤100mA |
| Leakage current | ≤10µA |
| Output voltage drop | ≤2V@Iload=100mA |
| Max ripple content | ≤10% |
| LED indicators | Yellow (status output), green (stability) |
| Time delay before availability | ≤200ms |
| Short-circuit protection | Yes |

| | |
|---|---|
| Reverse Polarity Protection | Yes |
| Emission | LED Infrared (850nm) |
| Interference to external light | 3000lux (incandescent lamp), 10000lux (sunlight) |
| Impulsive Overvoltage Protection | Yes |

Mechanical data

| | |
|---|---|
| Dimensions | 40,6x21x13mm |
| Housing material | PA66 |
| Weight | 10g |
| Connections | M8 plug 4pin |
| Active Head Material | PMMA |
| Tightening torque | 1Nm |
| Operating temperature | - 25°C…+ 70° C (Without freeze) |
| Storage temperature | - 30°C…+ 80° C (Without freeze) |
| Diameter/Dimension | Cubic |

Test/Approvals

| | |
|---|---|
| Approvals | CE cULus |
| EMC compatibility | EN 60947-5-2 |
| Shocks and vibrations | Vibration IEC 60068-2-6 / Shock IEC 60068-2-27 |

| | |
|---|---|
| Degree of protection | IP67 |

Generical Data

| | |
|---|---|
| Dimensions | 40,6x21x13mm |
| Operating Temperature | - 25°C…+ 70°C (Without freeze) |
| Mechanical Protection | IP67 |

# CONNECTIONS

Eletrical diagram

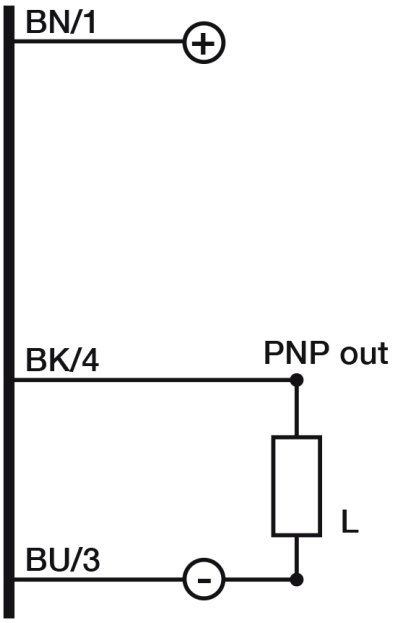


Connector

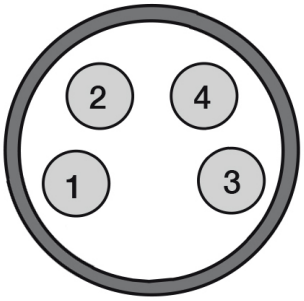


# OTHERS

Dimensions

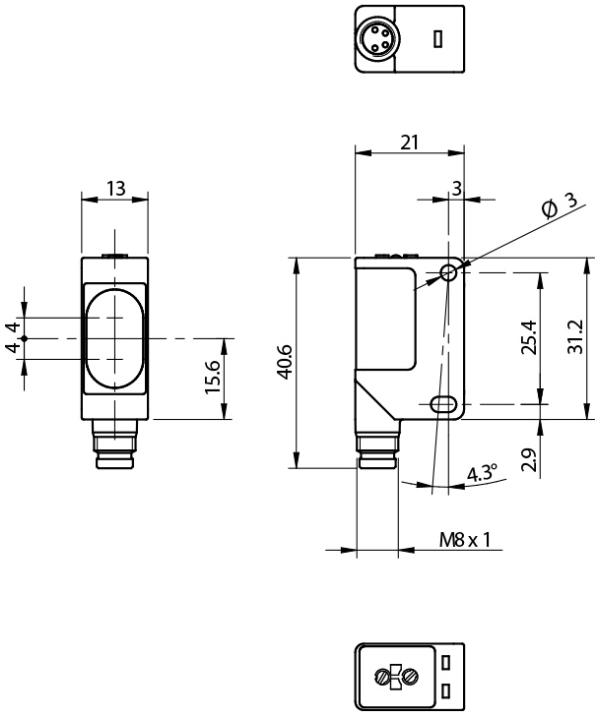


Response curves

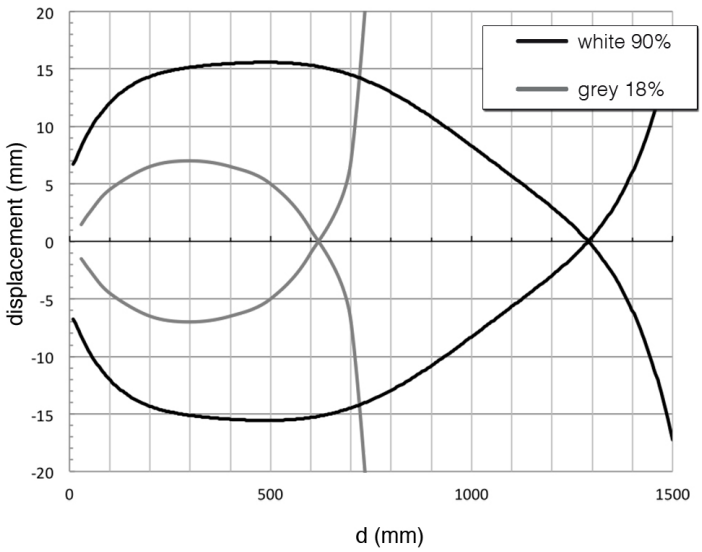


**Datasensing S.r.l.**
Strada S.Caterina, 235
41122 Modena (MO)
Tel. 059 420411
Fax 059 253973
E-mail
info@datasensing.com

**date of printing**
25/10/2026
03:51:04