# QM

## QMIHD/0P-0A

**Photo.Mini,PNP-NO/NC,Cable,Emit+Receiv**

**MINIATURIZED PHOTOELECTRIC SENSORS WITH HIGH PERFORMANCE**

# OVERVIEW

- Cubic miniaturized photoelectric high-performance sensors with long sensing distance
- 2 kHz switching frequency, background suppression with mechanical adjustment
- Wide range of models: diffuse reflection with short, medium and long sensing distance, polarized, reflective for transparent objects, through-beam and background suppression
- Available with cable and M8 plug exit or with M8-M12 pig-tail
- Selectable LO/DO output state
- Completely filled with resin (except background suppression models)
- Complete protection against electrical damages

# TECHNICAL FEATURES

Detection properties

| | |
|---|---|
| Nominal sensing distance | 30m |
| Thermal drift of Sr | ≤10% Sr |
| Repeat Accuracy | 5% |
| Sensitivity adjustment | Trimmer |

Application

| | |
|---|---|
| Function Principle | Emitter and Receiver |
| Notes | EG=2 |
| Optic position | Radial 90° |
| Emitter Code | |
| Receiver Code | |

Outputs

| | |
|---|---|
| Output type | PNP L/D Selectable |
| Output Function | L/D Selectable |
| Switching frequency | 2kHz |
| Response time | 250µs |

Electrical data

| | |
|---|---|
| Operating Voltage | 10…30VDC |
| No-Load supply current | ≤45mA |
| Load current | ≤100mA |
| Leakage current | ≤10µA |
| Output voltage drop | ≤2V@Iload=100mA |
| Max ripple content | ≤10% |
| LED indicators | Yellow (status output), green (stability) |

| | |
|---|---|
| Time delay before availability | ≤200ms |
| Short-circuit protection | Yes |
| Reverse Polarity Protection | Yes |
| Emission | LED Infrared (850nm) |
| Interference to external light | 3000lux (incandescent lamp), 10000lux (sunlight) |
| Impulsive Overvoltage Protection | Yes |

Mechanical data

| | |
|---|---|
| Dimensions | |
| Housing material | PA66 |
| Weight | |
| Connections | 2m PVC cable |
| Active Head Material | PMMA |
| Tightening torque | 1Nm |
| Operating temperature | |
| Storage temperature | - 30°C…+ 80° C (Without freeze) |
| Diameter/Dimension | Cubic |

Test/Approvals

| | |
|---|---|
| Approvals | CE cULus |

| | |
|---|---|
| EMC compatibility | EN 60947-5-2 |
| Shocks and vibrations | Vibration IEC 60068-2-6 / Shock IEC 60068-2-27 |
| Degree of protection | IP67 |

Generical Data

| | |
|---|---|
| Dimensions | 31,2x21x13mm |
| Operating Temperature | - 25°C…+ 70°C (Without freeze) |
| Mechanical Protection | IP67 |

# CONNECTIONS

Eletrical diagram

## QM**/0P

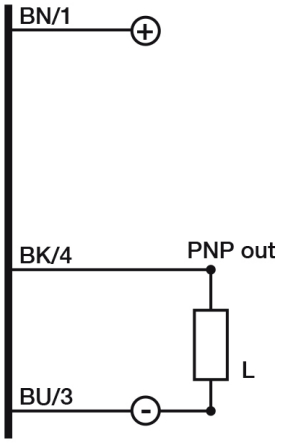


## QM*H

# OTHERS

Dimensions

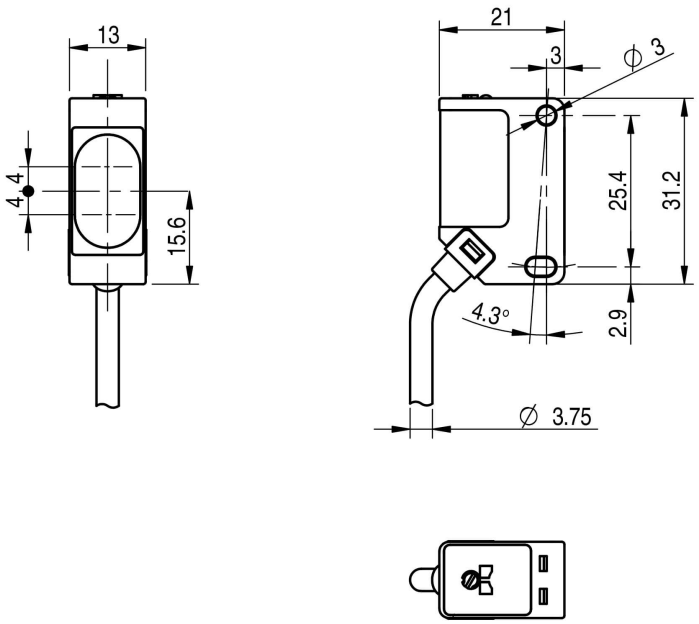


Response curves

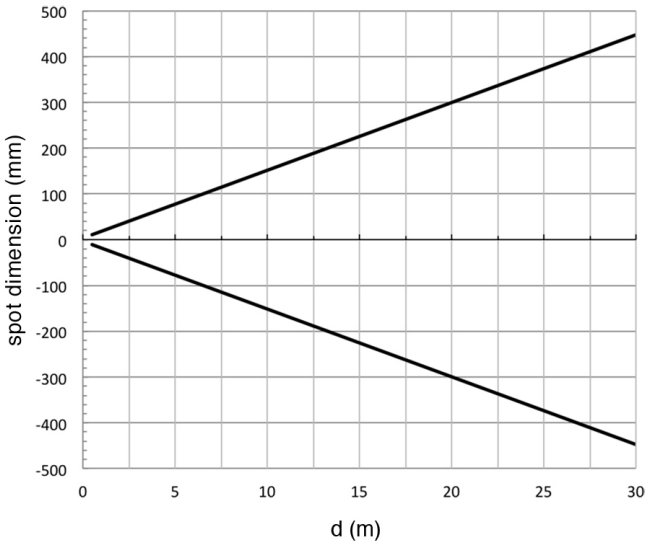


**Datasensing S.r.l.**
Strada S.Caterina, 235
41122 Modena (MO)
Tel. 059 420411
Fax 059 253973
E-mail
info@datasensing.com

**date of printing**
25/10/2026
03:51:11