# PMS-PKS/PMW-PKW

## PKW/0N-2H

**Ind.M18,NPN-NO+NC,M12 Plug,Nsch-STD**

**M12 & M18 IP67/68 CYLINDRICAL FOR HARSH ENVIRONMENTS - DC**

# OVERVIEW

- Innovative housing (double enclosure)
- Cutting oils resistant (for machines tool)
- Immersion proof (sealing IP 67/68)
- High frequency switching
- Complementary output (NO+NC), M12 plug cable exit
- ATEX models, cat. 3, available on request
- LED indicator visible at wide angle
- Complete protection against electrical damages

# TECHNICAL FEATURES

Detection properties

| | |
|---|---|
| Nominal sensing distance | 8mm |
| Operanting distance | 0…6,48mm |
| Standard target | 24x24mm FE360 |
| Correction Factor | copper: 0,30 / aluminium: 0,37 / brass: 0,46 / stainless steel: 0,78 |
| | |

| | |
|---|---|
| Thermal drift of Sr | < 10% |
| Repeat Accuracy | < 5% (UB 24V Ta=23°C ±5°C) |
| Hysteresis | 1 … 20% |

Application

| | |
|---|---|
| Description | M18 standard no-flush mount |
| Functions | Proximity |

Outputs

| | |
|---|---|
| Output type | NPN |
| Output Function | NO + NC |
| Switching frequency | 1,5kHz |

Electrical data

| | |
|---|---|
| Operating Voltage | 10...30Vdc |
| No-Load supply current | ≤ 15mA |
| Load current | ≤ 400mA |
| Leakage current | ≤ 10µA |
| Output voltage drop | ≤ 2V @200mA |
| Max ripple content | ≤ 10% |
| LED indicators | Yellow LED output state |
| Time delay before availability | ≤ 50ms |

| | |
|---|---|
| Short-circuit protection | Yes |
| Reverse Polarity Protection | Yes |
| Impulsive Overvoltage Protection | Yes |

Mechanical data

| | |
|---|---|
| Dimensions | M18 x 1 / L =63mm |
| Mounting | Unshielded |
| Material | AISI303 Stainless Steel |
| Housing material | AISI303 Stainless Steel |
| Weight | 55g |
| Connections | M12 Plug |
| Active Head Material | PSU |
| Tightening torque | 50Nm |
| Operating temperature | -25°C…+70°C |
| Diameter/Dimension | M18 |

Test/Approvals

| | |
|---|---|
| Approvals | CE |
| EMC compatibility | IEC 60947-5-2 |
| Shocks and vibrations | Vibration IEC 60068-2-6 / Shock IEC 60068-2-27 |

| | |
|---|---|
| Degree of protection | IP67, IP68 |

Accessories

| | |
|---|---|
| Supplied Accessories | 2 nuts M18x1 |

Generical Data

| | |
|---|---|
| Dimensions | M18 x 1 / L =63mm |
| Operating Temperature | -25°C…+70°C |
| Mechanical Protection | IP67 |

# CONNECTIONS

Eletrical diagram

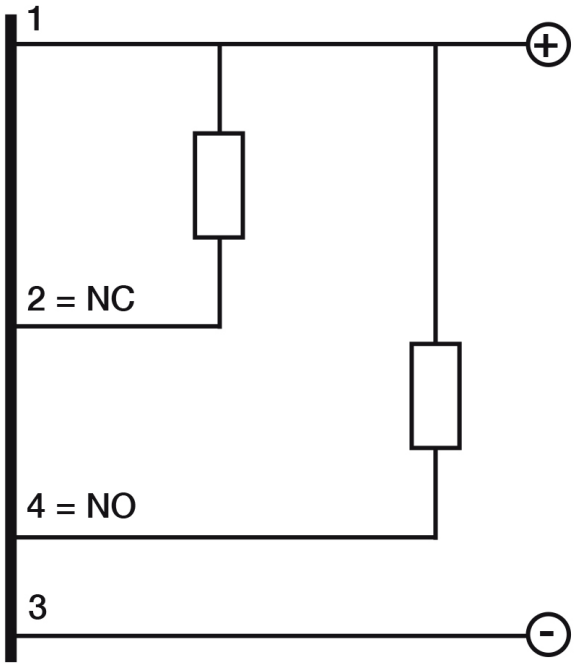


Connector

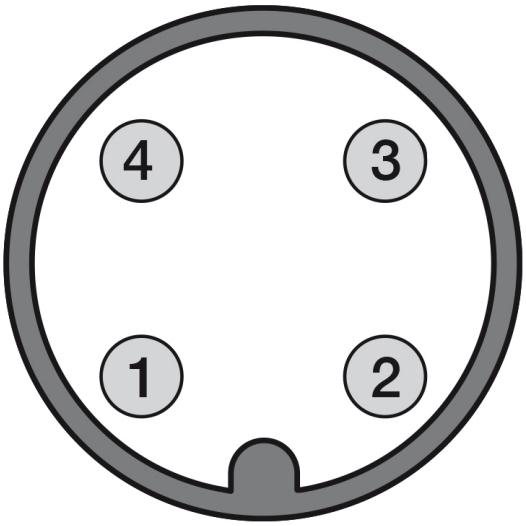


# OTHERS

Dimensions

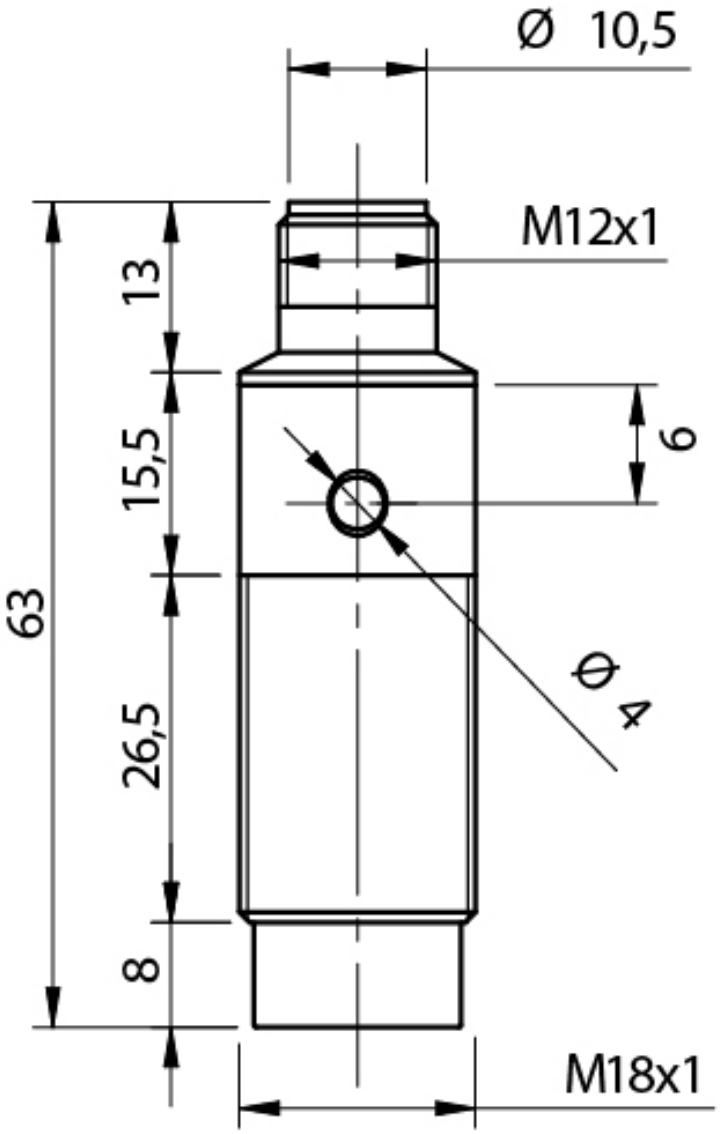


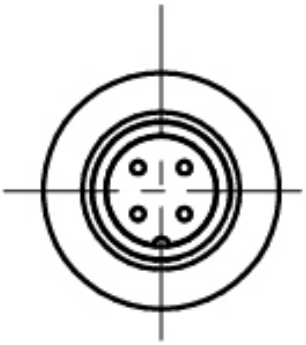

Response curves

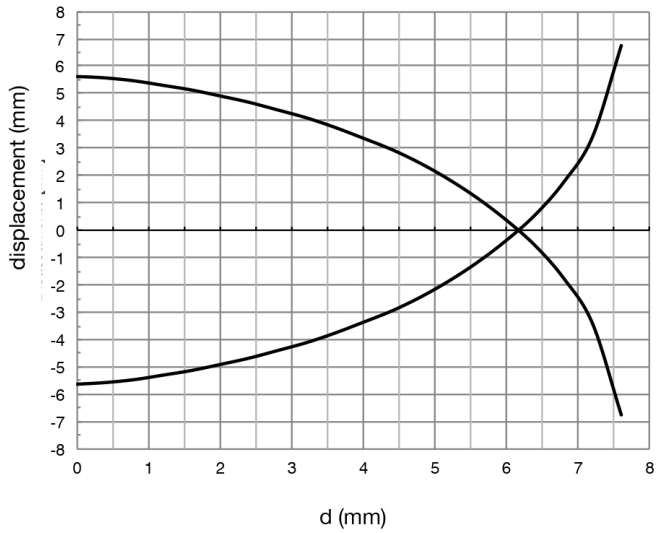


Installation

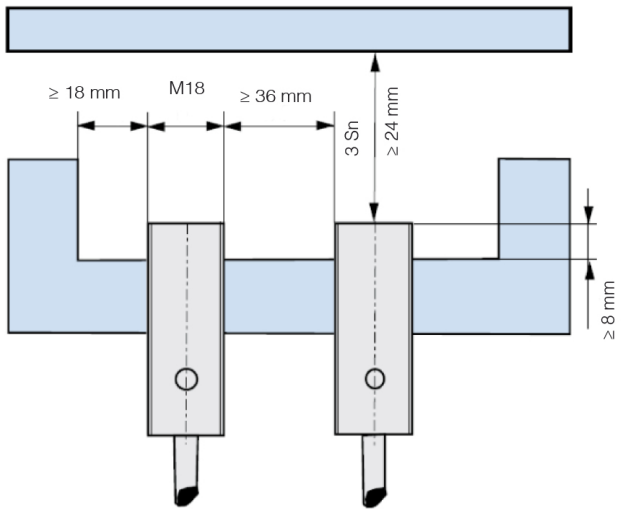


**Datasensing S.r.l.**
Strada S.Caterina, 235
41122 Modena (MO)
Tel. 059 420411
Fax 059 253973
E-mail
info@datasensing.com

**date of printing**
25/10/2026
03:32:50