SA

SAP/0N-1K

Photo.M18,NPN-NO/NC,M12 plug 90°,Reflex

M18 DC HIGH PERFORMANCES WITH REAR ADJUSTMENT

OVERVIEW

- Wide range of models: diffuse, retro-reflective, polarized and fixed-focus
- All models are available with sensitivity adjustment trimmer
- Double LED indicator (ON/OFF - supply)
- NO/NC selectable output
- IP65 protection degree
- Complete protection against electrical damage
- Wide range of plugs, accessories and reflectors available
- Approvals: CE

TECHNICAL FEATURES

Detection properties

Nominal sensing distance	3m
Thermal drift of Sr	10% Sr
Repeat Accuracy	5%
Sensitivity adjustment	Trimmer

Application

Function Principle	Polarized
Notes	On RL110 reflector
Optic position	Axial

Outputs

Output type	NPN L/D Selectable
Output Function	L/D Selectable
Switching frequency	1Khz
Response time	500µs

Electrical data

Operating Voltage	10…30VDC
No-Load supply current	≤ 30mA
Load current	≤100mA
Leakage current	≤10µA
Output voltage drop	≤2V@Iload=100mA
Max ripple content	≤10%
LED indicators	Green (powerON), Yellow (Status output)
Time delay before availability	≤200ms
Short-circuit protection	Yes

Reverse Polarity Protection	Yes
Emission	LED Red (660nm)
Interference to external light	3.000lux (incandescent lamp), 10.000lux (sunlight)

Mechanical data

Dimensions	21,4mmx90mm
Housing material	Nickel-plated brass / Nylon plug
Weight	100g
Connections	M12 plug 90°
Active Head Material	PMMA
Tightening torque	25Nm
Operating temperature	- 25°C…+ 70° C (without freeze)
Diameter/Dimension	M18

Test/Approvals

Approvals	CE
EMC compatibility	EN 60947-5-2
Shocks and vibrations	Vibration IEC 60068-2-6 / Shock IEC 60068-2-27
Degree of protection	IP67

Accessories

Supplied Accessories	Nuts M18 x 1

Generical Data

Dimensions	21,4mmx90mm
Operating Temperature	- 25°C…+ 70°C (Without freeze)
Mechanical Protection	IP67

CONNECTIONS

Eletrical diagram

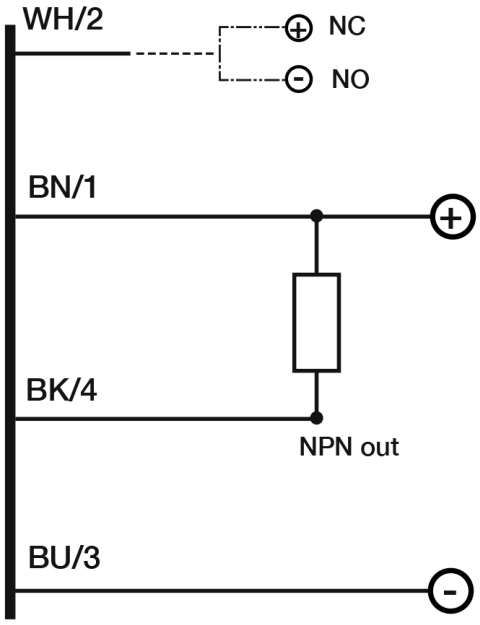

Connector

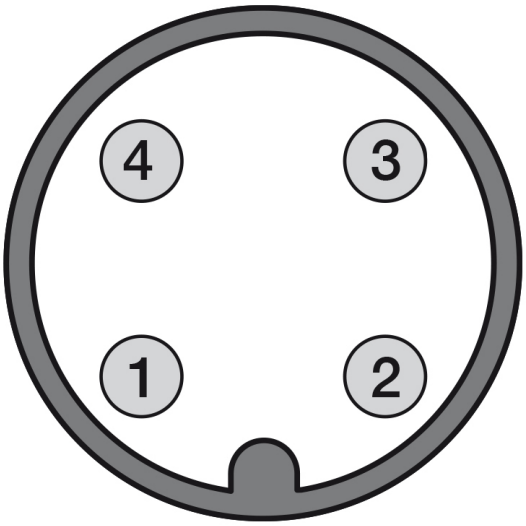

OTHERS

Dimensions

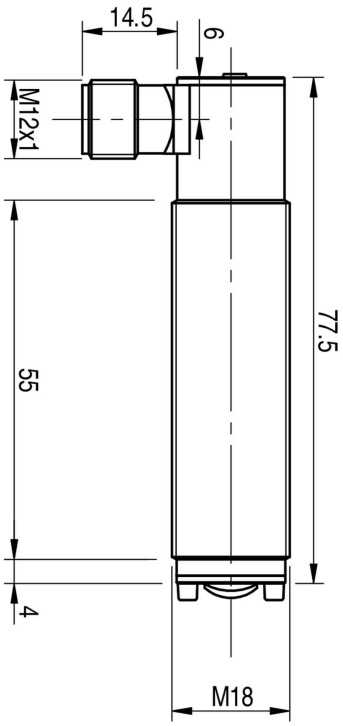

Response curves

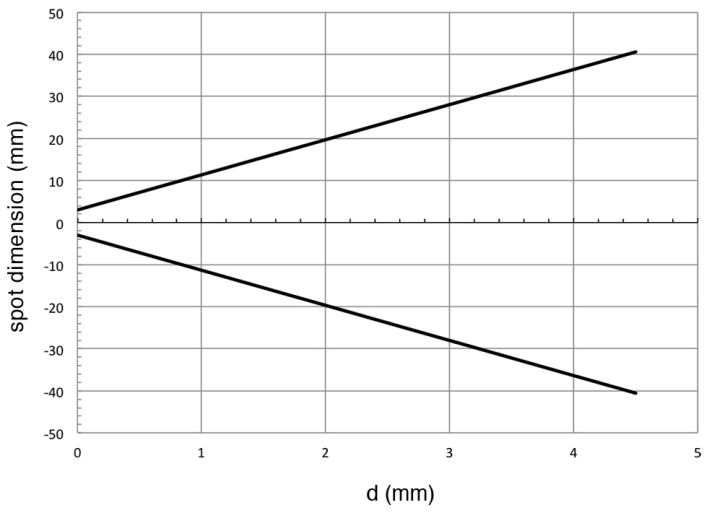

Datasensing S.r.l.
Strada S.Caterina, 235
41122 Modena (MO)
Tel. 059 420411
Fax 059 253973
E-mail
info@datasensing.com

date of printing
25/10/2026
03:42:06