QM

QMIG/0N-0F

Photo.Mini,NPN-NO/NC,M8 plug,Reflex

MINIATURIZED PHOTOELECTRIC SENSORS WITH HIGH PERFORMANCE

OVERVIEW

- Cubic miniaturized photoelectric high-performance sensors with long sensing distance
- 2 kHz switching frequency, background suppression with mechanical adjustment
- Wide range of models: diffuse reflection with short, medium and long sensing distance, polarized, reflective for transparent objects, through-beam and background suppression
- Available with cable and M8 plug exit or with M8-M12 pig-tail
- Selectable LO/DO output state
- Completely filled with resin (except background suppression models)
- Complete protection against electrical damages

TECHNICAL FEATURES

Detection properties

Nominal sensing distance	1m
Thermal drift of Sr	≤10% Sr
Repeat Accuracy	5%
Sensitivity adjustment	Trimmer

Minimum sensing distance (blind zone)	0,05m

Application

Function Principle	Transparent objects
Notes	On RL110 reflector
Optic position	Radial 90°

Outputs

Output type	NPN L/D Selectable
Output Function	L/D Selectable
Switching frequency	2kHz
Response time	250µs

Electrical data

Operating Voltage	10…30VDC
No-Load supply current	≤ 30mA
Load current	≤100mA
Leakage current	≤10µA
Output voltage drop	≤2V@Iload=100mA
Max ripple content	≤10%
LED indicators	Yellow (status output)

Time delay before availability	≤200ms
Short-circuit protection	Yes
Reverse Polarity Protection	Yes
Emission	LED Infrared (850nm)
Interference to external light	3000lux (incandescent lamp), 10000lux (sunlight)
Impulsive Overvoltage Protection	Yes

Mechanical data

Dimensions	40,6x21x13mm
Housing material	PA66
Weight	10g
Connections	M8 plug 4pin
Active Head Material	PMMA
Tightening torque	1Nm
Operating temperature	- 25°C…+ 70° C (Without freeze)
Storage temperature	- 30°C…+ 80° C (Without freeze)
Diameter/Dimension	Cubic

Test/Approvals

Approvals	CE cULus
EMC compatibility	EN 60947-5-2

Shocks and vibrations	Vibration IEC 60068-2-6 / Shock IEC 60068-2-27
Degree of protection	IP67

Generical Data

Dimensions	40,6x21x13mm
Operating Temperature	- 25°C…+ 70°C (Without freeze)
Mechanical Protection	IP67

CONNECTIONS

Eletrical diagram

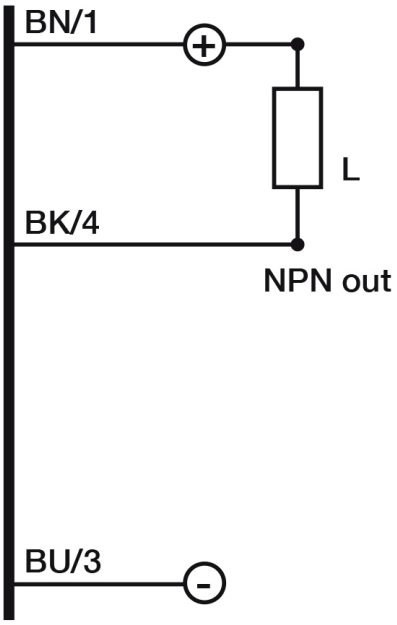

Connector

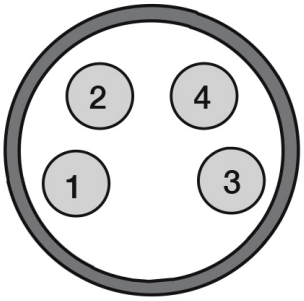

OTHERS

Dimensions

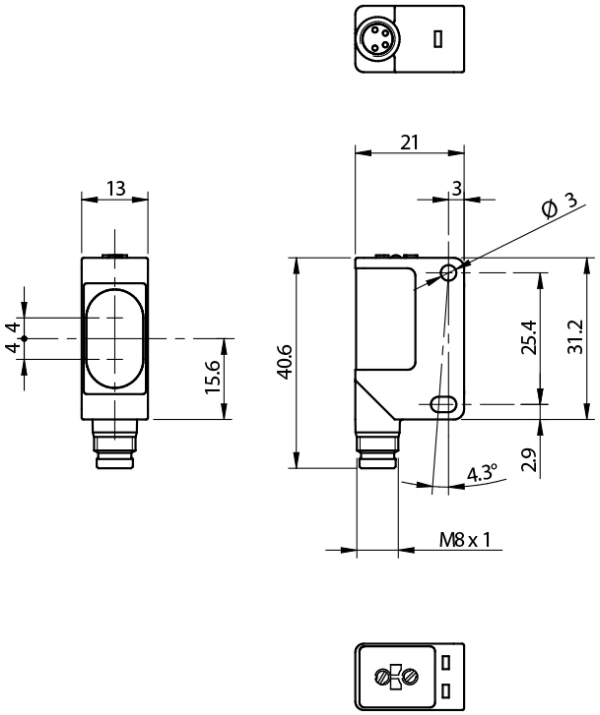

Response curves

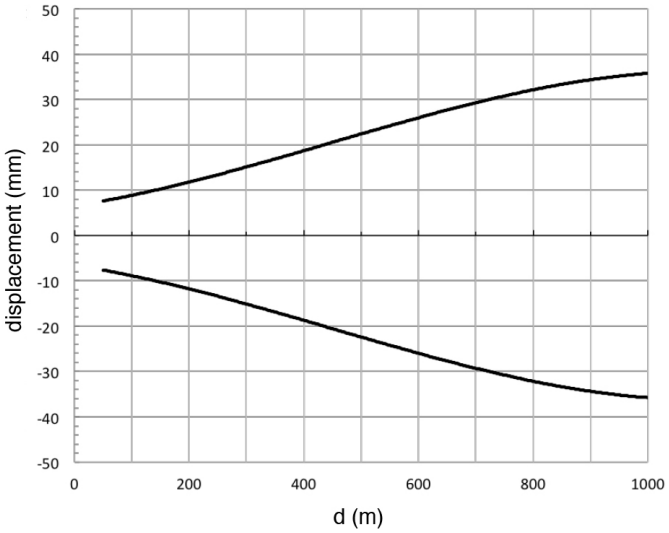

Datasensing S.r.l.
Strada S.Caterina, 235
41122 Modena (MO)
Tel. 059 420411
Fax 059 253973
E-mail
info@datasensing.com

date of printing
25/10/2026
03:51:08