# FG

## FGRS/0N-0E

**Photo.Midi,NPN-NO/NC,M12 plug,BGS**

**COMPACT PHOTOELECTRIC SWITCH SENSORS WITH HIGH PERFORMANCES AND HIGH DETECTION DISTANCES**

# OVERVIEW

- Cable output or with revolving connector, NPN or PNP output (DC models) and SPDT voltage free relay output (AC models)
- Selectable LO/DO output status
- Totally protected against electrical damages
- Background suppressions models: 310 mm, 600 mm
- Reflex polarized sensitivity adjustment 12 m
- Emitter and Receiver with max detecting range of 50 m
- Double Multifunction LED indicator: output state and using the pointing
- Sensitive adjustment models

CE

# TECHNICAL FEATURES

Detection properties

| | |
|---|---|
| Nominal sensing distance | 310mm |
| Sensitivity adjustment | Potentiometer 2 turns with position indicator |
| Minimum sensing distance (blind zone) | 90mm |

Application

| | |
|---|---|
| Function Principle | Blackground suppression |
| Notes | white target Kodak 90% 100 x 100mm |
| Optic position | Axial |

Outputs

| | |
|---|---|
| Output type | NPN L/D Selectable |
| Output Function | L/D Selectable |
| Switching frequency | 160Hz |
| Response time | 3,125ms |

Electrical data

| | |
|---|---|
| Operating Voltage | 10…30VDC |
| No-Load supply current | ≤ 35mA |
| Load current | ≤100mA |
| Output voltage drop | ≤1,8V@Iload=100mA |
| Max ripple content | 5Vpp |
| LED indicators | Green (powerON) Yellow (status output) |
| Time delay before availability | ≤200ms |
| Short-circuit protection | Yes |
| Reverse Polarity Protection | Yes |

| | |
|---|---|
| Emission | LED Red |
| Interference to external light | 10,000Lux (minimum sunlight), 3,000 min HF lamp |
| Impulsive Overvoltage Protection | Yes |

Mechanical data

| | |
|---|---|
| Dimensions | 20x44,9x60mm |
| Material | |
| Housing material | ABS |
| Weight | 40g |
| Connections | M12 plug |
| Active Head Material | PMMA |
| Operating temperature | -25°C…+55°C |
| Diameter/Dimension | Cubic |

Test/Approvals

| | |
|---|---|
| Approvals | CE UR |
| EMC compatibility | EN 60947-5-2 |
| Shocks and vibrations | Vibration IEC 60068-2-6 / Shock IEC 60068-2-28 |
| Degree of protection | IP67 |

Accessories

| | |
|---|---|
| Supplied Accessories | Mounting bracket STFG 00 |

| Generical Data | |
|---|---|
| Dimensions | 20x44,9x60mm |
| Operating Temperature | - 25°C…+ 55°C (Without freeze) |
| Mechanical Protection | IP67 |

# CONNECTIONS

Eletrical diagram

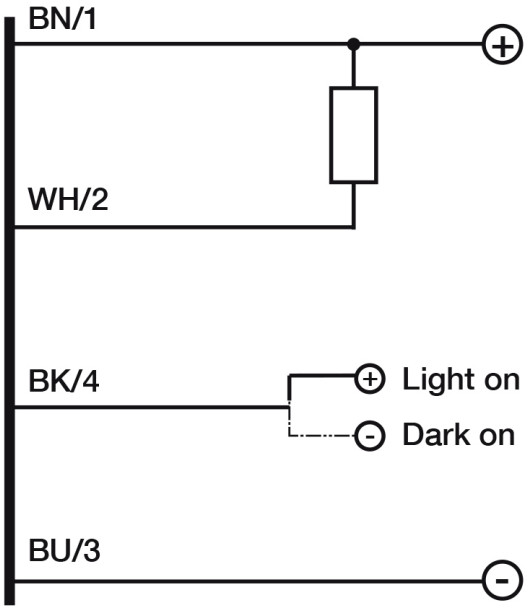


Connector

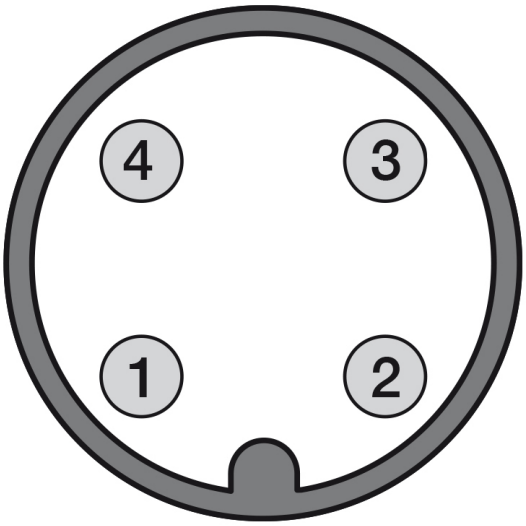


# OTHERS

Dimensions

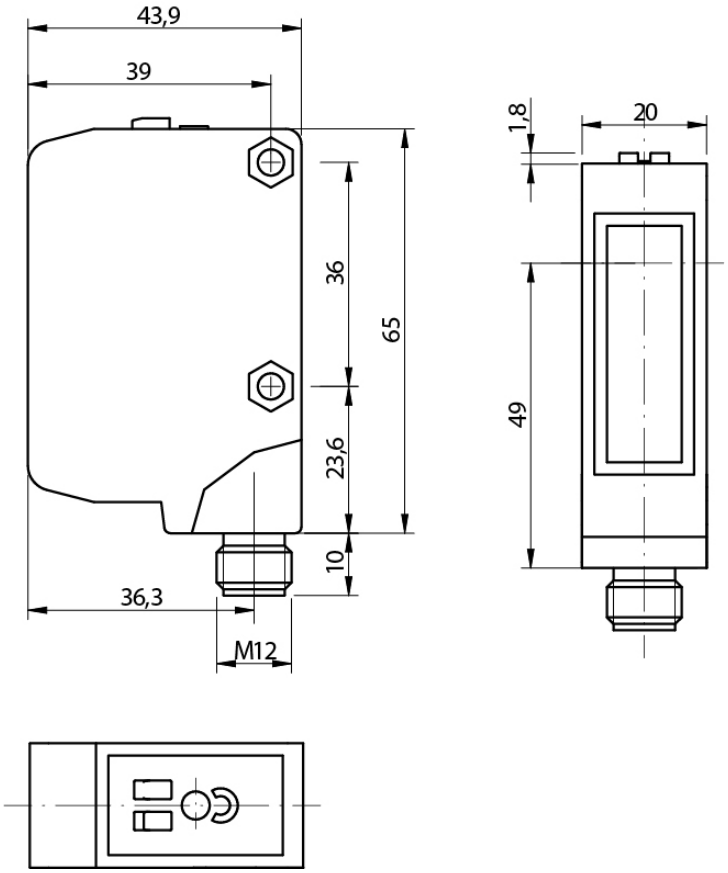


Response curves

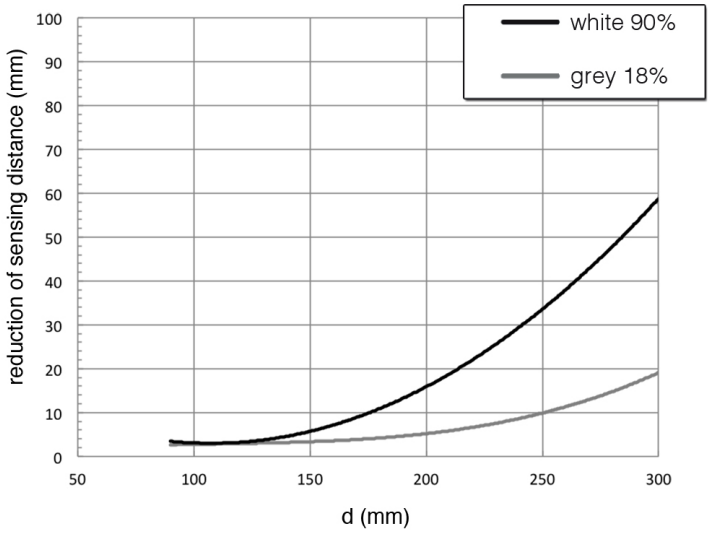


**Datasensing S.r.l.**
Strada S.Caterina, 235
41122 Modena (MO)
Tel. 059 420411
Fax 059 253973
E-mail
info@datasensing.com

**date of printing**
25/10/2026
05:38:05