FG

FGRN/0N-0E

Photo.Midi,NPN-NO/NC,M12 plug,Reflex

COMPACT PHOTOELECTRIC SWITCH SENSORS WITH HIGH PERFORMANCES AND HIGH DETECTION DISTANCES

OVERVIEW

- Cable output or with revolving connector, NPN or PNP output (DC models) and SPDT voltage free relay output (AC models)
- Selectable LO/DO output status
- Totally protected against electrical damages
- Background suppressions models: 310 mm, 600 mm
- Reflex polarized sensitivity adjustment 12 m
- Emitter and Receiver with max detecting range of 50 m
- Double Multifunction LED indicator: output state and using the pointing
- Sensitive adjustment models

CE

TECHNICAL FEATURES

Detection properties

Nominal sensing distance	12m
Sensitivity adjustment	Potentiometer 2 turns with position indicator

Application

Function Principle	Polarized

Notes	On RL123 reflector included
Optic position	Axial

Outputs

Output type	NPN L/D Selectable
Output Function	L/D Selectable
Switching frequency	1Khz
Response time	500µs

Electrical data

Operating Voltage	10…30VDC
No-Load supply current	≤ 35mA
Load current	≤100mA
Output voltage drop	≤1,8V@Iload=100mA
Max ripple content	5Vpp
LED indicators	Green (powerON) Yellow (status output)
Time delay before availability	≤200ms
Short-circuit protection	Yes
Reverse Polarity Protection	Yes
Emission	LED Red
Interference to external light	3,000Lux (incandescent lamp), 10,000 (sunlight)

Impulsive Overvoltage Protection	Yes

Mechanical data

Dimensions	20x44,9x60mm
Material	
Housing material	ABS
Weight	40g
Connections	M12 plug
Active Head Material	PMMA
Operating temperature	-25°C…+55°C
Diameter/Dimension	Cubic

Test/Approvals

Approvals	CE UR
EMC compatibility	EN 60947-5-2
Shocks and vibrations	Vibration IEC 60068-2-6 / Shock IEC 60068-2-28
Degree of protection	IP67

Accessories

Supplied Accessories	Mounting bracket STFG 00 and reflector RL 123

Generical Data

Dimensions	20x44,9x60mm
Operating Temperature	- 25°C…+ 55°C (Without freeze)
Mechanical Protection	IP67

CONNECTIONS

Eletrical diagram

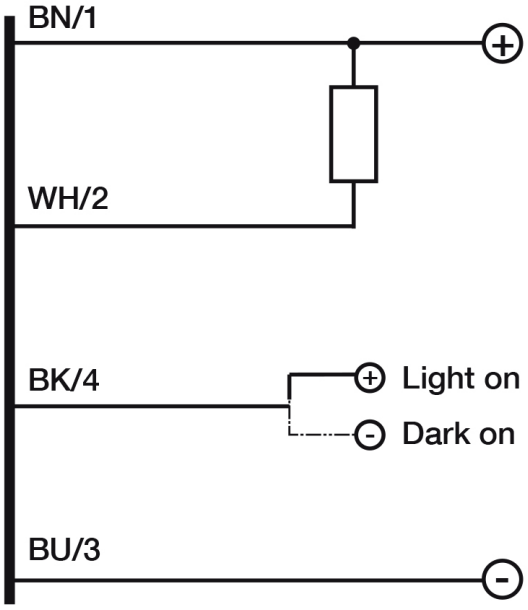

Connector

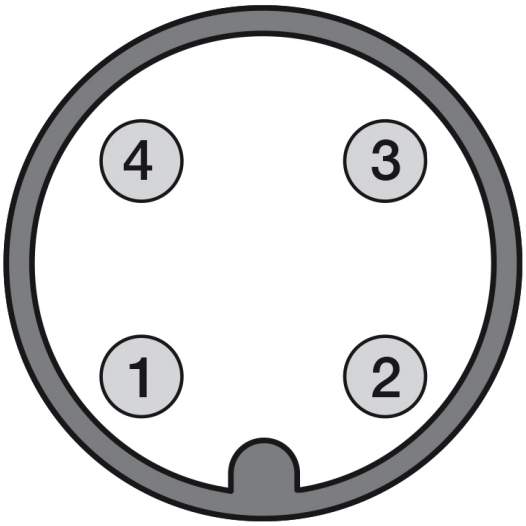

OTHERS

Dimensions

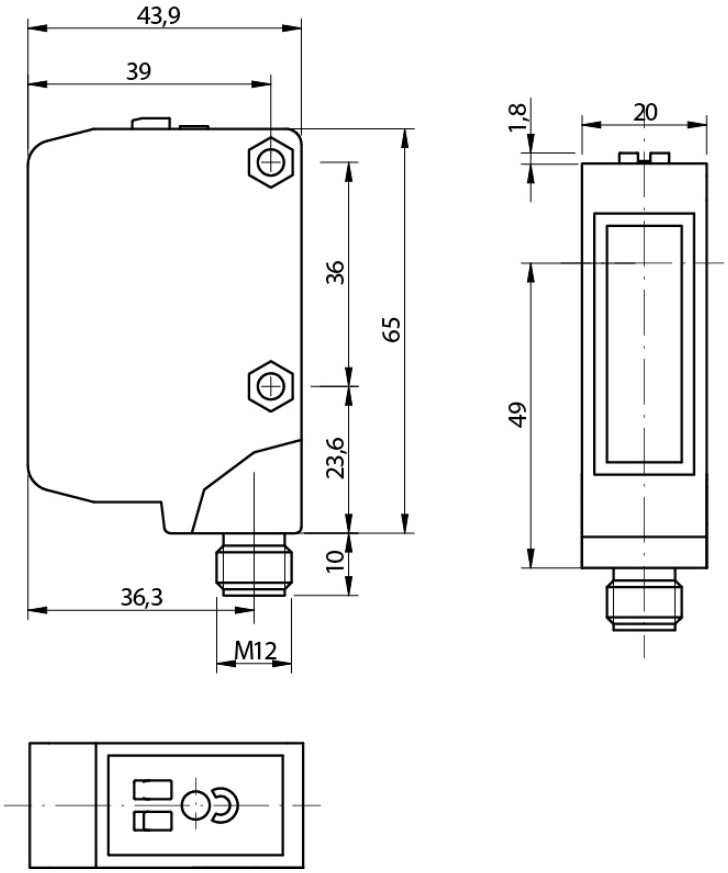

Response curves

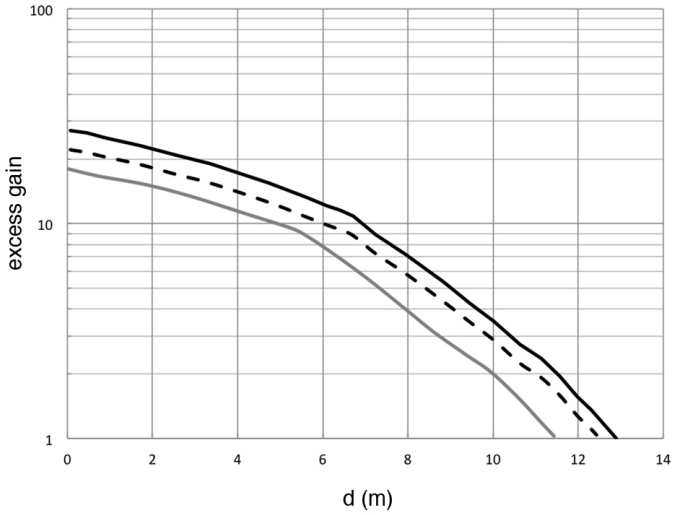

Datasensing S.r.l.
Strada S.Caterina, 235
41122 Modena (MO)
Tel. 059 420411
Fax 059 253973
E-mail
info@datasensing.com

date of printing
25/10/2026
05:37:56