BX04-BX10

BX04SR/0A-HB

Area Sen, H=90mm-30mm pitch,E+R

MEDIUM RESOLUTION AREA SENSORS

OVERVIEW

- IP67 protection degree (IP69K special model)
- Complete protection against electrical damages
- Detection of objects with irregular shape
- ATEX models, cat. 2 and cat. 3, available on request
- LED indicators
- Crossed beams detection

TECHNICAL FEATURES

Detection properties

Nominal sensing distance	0,3 … 2m
Thermal drift of Sr	≤10%
Beams space	30mm
controlled height	90mm
minimum detectable object	Ø 15mm

number of rays	4
Sensitivity adjustment	Trimmer

Application

Function Principle	Emitter- Receiver
Emitter/Receiver Code	BX04SR/0A-HB
Emitter Code	BX04S/00-HB
Receiver Code	BX04R/AD-HB

Outputs

Output type	NPN + PNP
Output Function	NO
Switching frequency	180Hz
Resposnse time for light/dark transition	500µs
Resposnse time for dark/light transition	5ms

Electrical data

Operating Voltage	10…26VDC
No-Load supply current	75mA
Load current	≤100mA
Leakage current	10µA

Output voltage drop	≤2V Iload = 100mA
Max ripple content	≤ 10%
LED indicators	Emitter: Green (powerON) Receiver: Yellow (output state) Red (alineament)
Time delay before availability	≤ 85ms
Short-circuit protection	autoreset
Reverse Polarity Protection	Yes
Emission	Infrared
Interference to external light	1000lux (incandescent lamp), 1500lux (sunlight)
Impulsive Overvoltage Protection	Yes

Mechanical data

Dimensions	45mm x 145mm x 20mm
Housing material	PBT
Weight	115g
Connections	M12 Plug
Active Head Material	PC
Tightening torque	25Nm
Operating temperature	0°C…+ 50° C (without freeze)

Test/Approvals

Approvals	CE cULus

EMC compatibility	EN 60947-5-2
Degree of protection	IP67

Accessories

Supplied Accessories	4 nuts M18x1 - 1 adjustment key - 2 90°angled brackets

Generical Data

Dimensions	45x145x20
Operating Temperature	0°C…+ 50° C (without freeze)
Mechanical Protection	IP67

CONNECTIONS

Eletrical diagram

BX04 - BX10 emitter

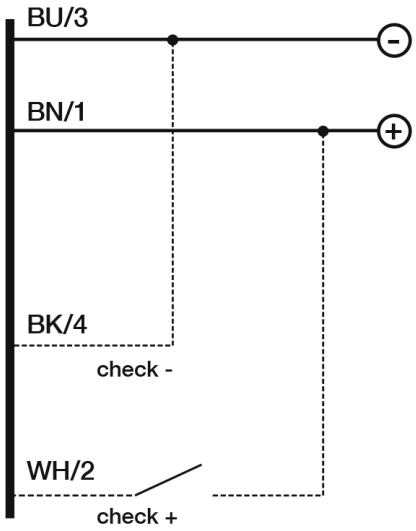

BX04 - BX10 receiver

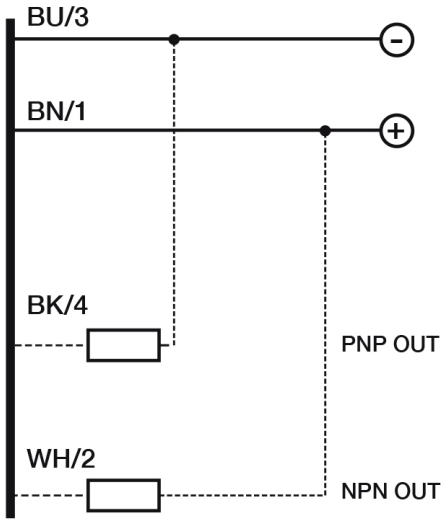

Connector

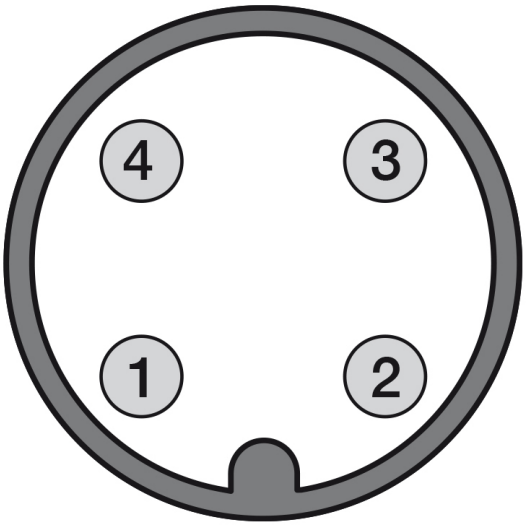

OTHERS

Dimensions

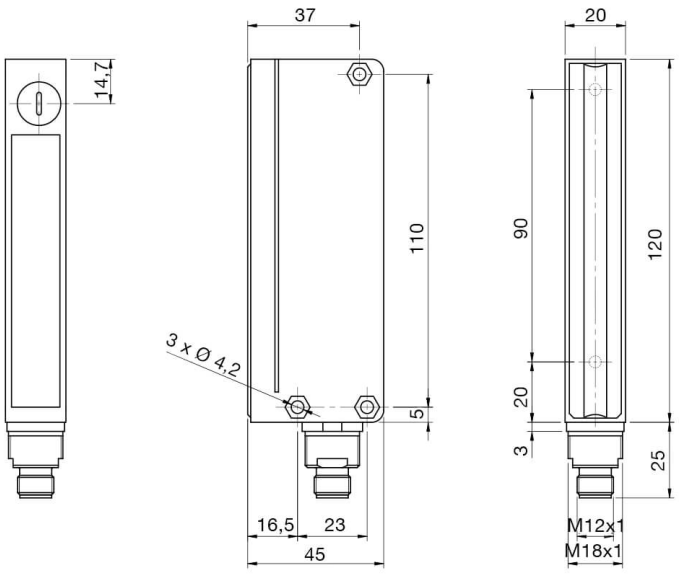

Datasensing S.r.l.
Strada S.Caterina, 235
41122 Modena (MO)

date of printing
25/10/2026
03:19:30

Tel. 059 420411
Fax 059 253973
E-mail
info@datasensing.com