UR+DG

URA/00

Photo.Maxi,Relay-NO/NC,Ampli 24Vdc

CONTROL UNIT FOR MINIATURIZED SENSORS WITH MINIATURE PHOTOELECTRIC SENSORS

OVERVIEW

- The unit allows the mouting of miniature pair of sensors suitable for very harsh environments (DG series)
- LED indicators: alignment (stability), operating voltage, alarm and output state
- Operating voltage AC or DC
- Relay output and relay alarm output
- Double timer with indipendent adjustments
- Sensitivity adjustment
- Possibility of mounting on panel
- IP68 photoelectric sensors for applications in harsh environment
- Sensing distance 60 m (HI), 30 m (LO)
- Approvals: CE

TECHNICAL FEATURES

Outputs

Switching frequency	10Hz

Electrical data

Operating Voltage	24Vdc
No-Load supply current	≤ 100mA

Max ripple content	≤ 10%
LED indicators	green (supply) red (output state) green (stability) red (alarm)
Max output voltage	250V
Max output current	3A
Operating time (relè de-energized)	≤ 40ms
Reset time (relè energized)	≤ 40ms
Voltage tolerance	± 20%
Operating output	Relay NO+NC
Relay with alarm output	no

Mechanical data

Dimensions	36x90x67mmù
Housing material	Noryl 90 V-0
Weight	110g
Operating temperature	-10°C … +50°C (without freeze)

Test/Approvals

Approvals	CE
EMC compatibility	Conforming with EMC directive according with EN60947-5-2
Degree of protection	IP20

Generical Data

Dimensions	36x90x67mmù
Operating Temperature	-10°C … +50°C (without freeze)
Mechanical Protection	IP20

CONNECTIONS

Eletrical diagram

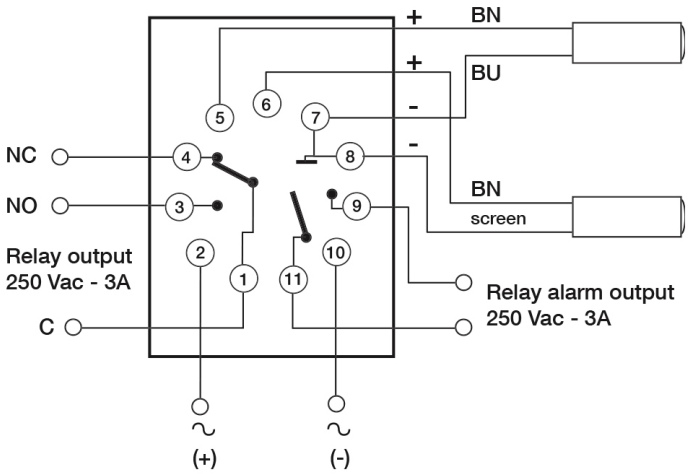

OTHERS

Dimensions

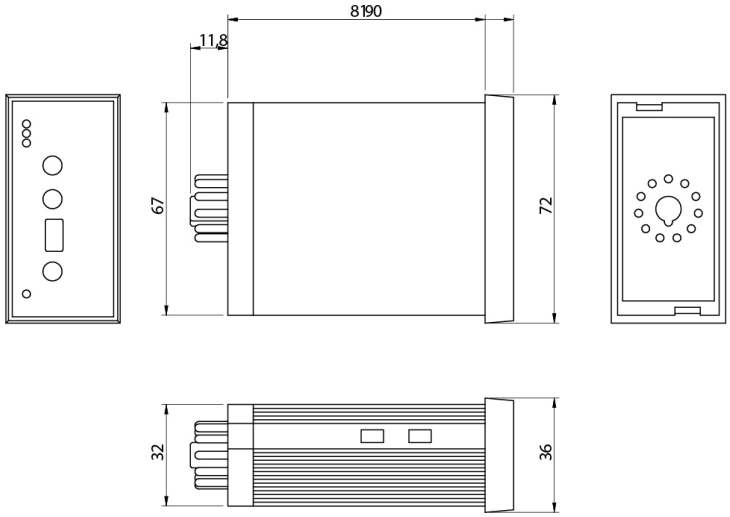

Datasensing S.r.l.
Strada S.Caterina, 235
41122 Modena (MO)
Tel. 059 420411
Fax 059 253973
E-mail
info@datasensing.com

date of printing
25/10/2026
04:02:51