PM3

PM3/00-2A

Ind.M12,NPN/PNP-NO/NC,Cable,Nsch-STD

M12 DECOUT® CYLINDRICAL INDUCTIVE SENSORS

OVERVIEW

- Wide range of models: standard, DECOUT® output
- Output: cable, M12 plug cable exit
- Models with 4 wires
- ATEX models, cat. 3, available on request

CE

TECHNICAL FEATURES

Detection properties

Nominal sensing distance	4mm
Operanting distance	0…3,2mm
Standard target	12x12mm FE360
Correction Factor	copper: 0,52 / aluminium: 0,57 / brass: 0,62 / stainless steel: 0,87
Thermal drift of Sr	< 10%
Repeat Accuracy	< 5% (UB 24V Ta=23°C ±5°C)

Hysteresis	1 … 20%

Application

Description	M12 standard no-flush mount
Functions	Proximity

Outputs

Output type	NPN/PNP
Output Function	NO/NC
Switching frequency	1kHz

Electrical data

Operating Voltage	10...30Vdc
No-Load supply current	≤ 30mA
Load current	≤ 100mA
Leakage current	≤ 10µA
Output voltage drop	≤ 1,2V @100mA
Max ripple content	≤ 10%
LED indicators	Yellow LED output state
Time delay before availability	≤100ms
Short-circuit protection	Yes

Reverse Polarity Protection	Yes
Impulsive Overvoltage Protection	Yes
Protection against inductive loads	Yes

Mechanical data

Dimensions	M12 x 1 / L = 65mm
Mounting	Unshielded
Material	Nickel-plated brass
Housing material	Nickel-plated brass
Weight	66g
Connections	2m PVC Cable
Active Head Material	PBT
Tightening torque	10Nm
Operating temperature	-25°C…+70°C
Diameter/Dimension	M12

Test/Approvals

Approvals	CE
EMC compatibility	IEC 60947-5-2
Shocks and vibrations	Vibration IEC 60068-2-6 / Shock IEC 60068-2-27
Degree of protection	IP67

Accessories	
Supplied Accessories	2 nuts M12x1
Generical Data	
Dimensions	M12 x 1 / L = 65mm
Operating Temperature	-25°C…+70°C
Mechanical Protection	IP67

CONNECTIONS

Eletrical diagram

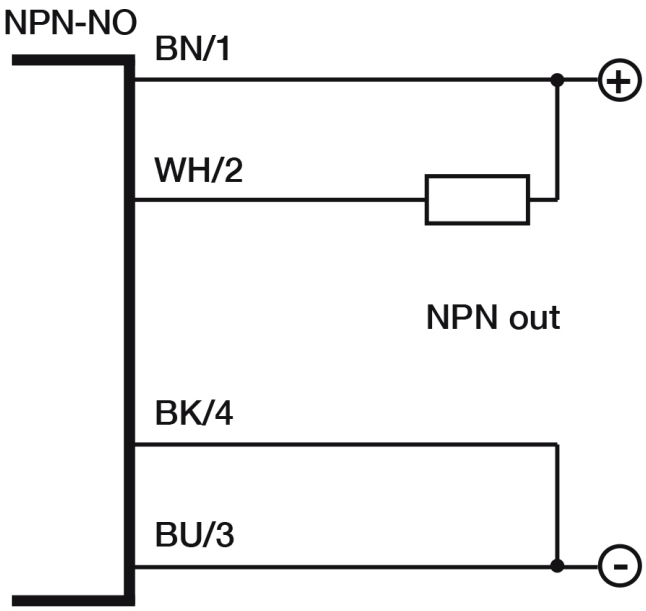

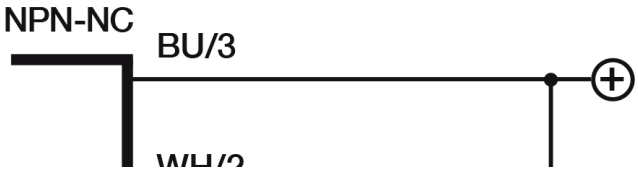

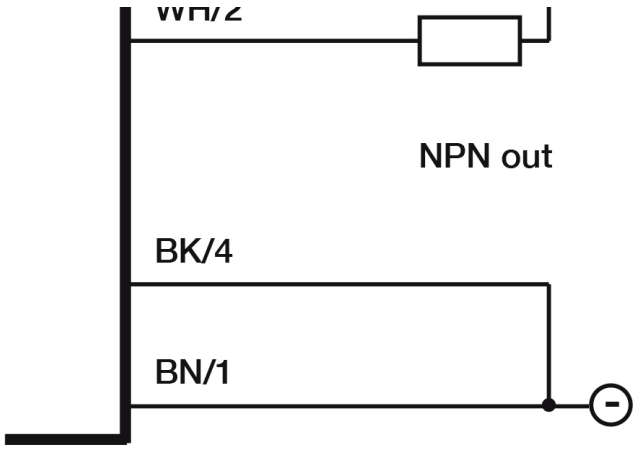
WH/2
NPN out
BK/4
BN/1

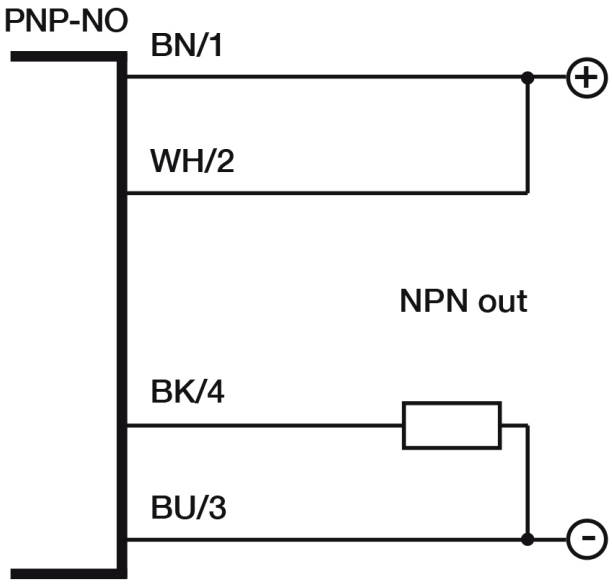
PNP-NO
BN/1
WH/2
NPN out
BK/4
BU/3

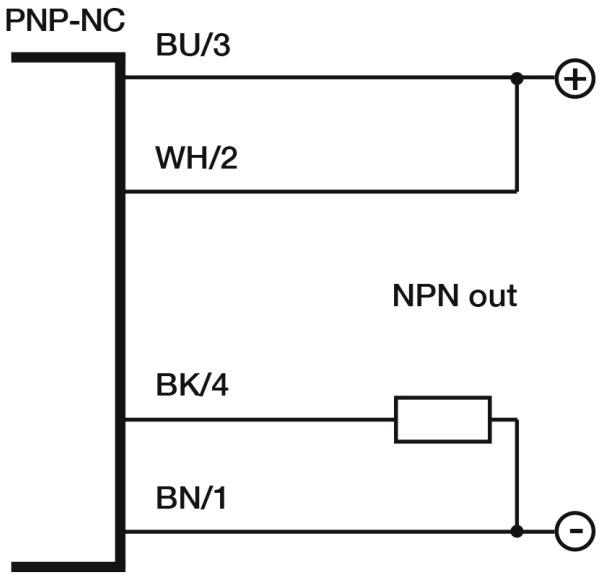
PNP-NC
BU/3
WH/2
NPN out
BK/4
BN/1

OTHERS

Dimensions

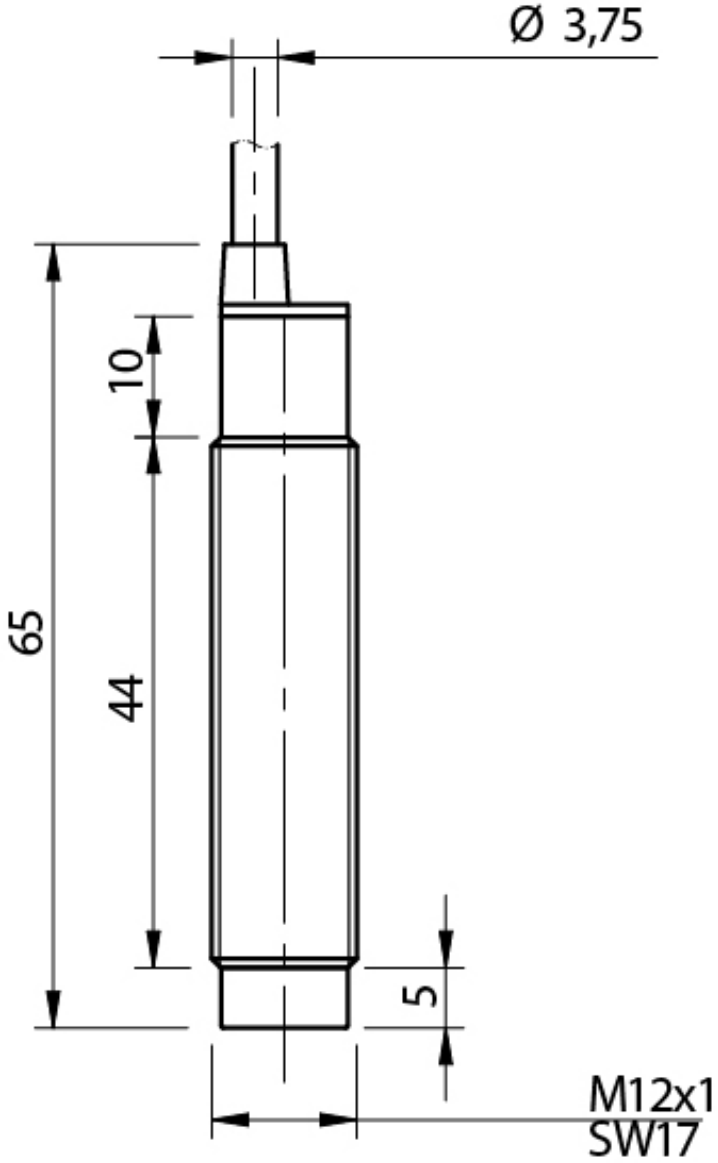

Installation

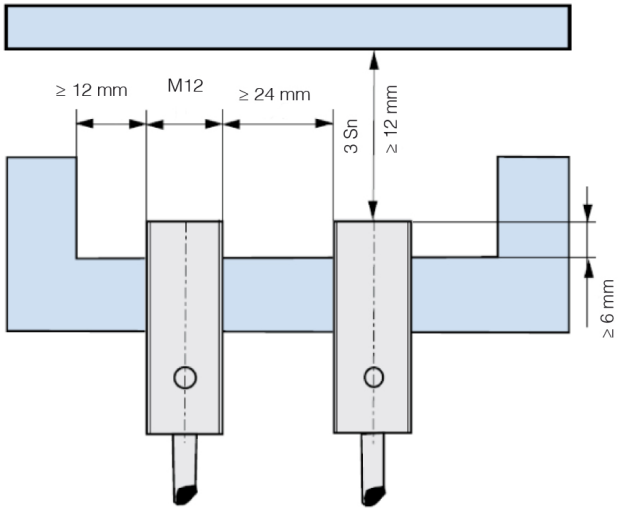

Datasensing S.r.l.
Strada S.Caterina, 235
41122 Modena (MO)
Tel. 059 420411
Fax 059 253973
E-mail
info@datasensing.com

date of printing
25/10/2026
03:23:31