PK3

PK3/00-1H

Ind.M18,NPN/PNP-NO/NC,M12 plug,Sch-STD

M18 DECOUT® CYLINDRICAL INDUCTIVE SENSORS

OVERVIEW

- Wide range of models: standard, long distance, DECOUT® output
- Output: cable, M12 and plug cable exit
- Models with 4 wires
- ATEX models, cat. 3, available on request
- Special models with double enclosure immersion proof (IP 68)
- Models with complementary output (NO+NC)

TECHNICAL FEATURES

Detection properties

Nominal sensing distance	5mm
Operanting distance	0…4,05mm
Standard target	18x18mm FE360
Correction Factor	copper: 0,40 / aluminium: 0,48 / brass: 0,72 / stainless steel: 0,86
Thermal drift of Sr	< 10%

Repeat Accuracy	< 5% (UB 24V Ta=23°C ±5°C)
Hysteresis	1 … 20%

Application

Description	M18 standard flush mount
Functions	Proximity

Outputs

Output type	NPN/PNP
Output Function	NO/NC
Switching frequency	300Hz

Electrical data

Operating Voltage	10...30Vdc
No-Load supply current	≤ 30mA
Load current	≤ 100mA
Leakage current	≤ 10µA
Output voltage drop	≤ 1,2V @100mA
Max ripple content	≤ 10%
LED indicators	Yellow LED output state
Time delay before availability	≤100ms
Short-circuit protection	Yes

Reverse Polarity Protection	Yes
Impulsive Overvoltage Protection	Yes
Protection against inductive loads	Yes

Mechanical data

Dimensions	M18 x 1 / L = 72mm
Mounting	Shielded
Material	Nickel-plated brass
Housing material	Nickel-plated brass
Weight	58g
Connections	M12 Plug
Active Head Material	PBT
Tightening torque	25Nm
Operating temperature	-25°C…+70°C
Diameter/Dimension	M18

Test/Approvals

Approvals	CE
EMC compatibility	IEC 60947-5-2
Shocks and vibrations	Vibration IEC 60068-2-6 / Shock IEC 60068-2-27

Degree of protection	IP67

Accessories

Supplied Accessories	2 nuts M18x1

Generical Data

Dimensions	M18 x 1 / L = 72mm
Operating Temperature	-25°C…+70°C
Mechanical Protection	IP67

CONNECTIONS

Eletrical diagram

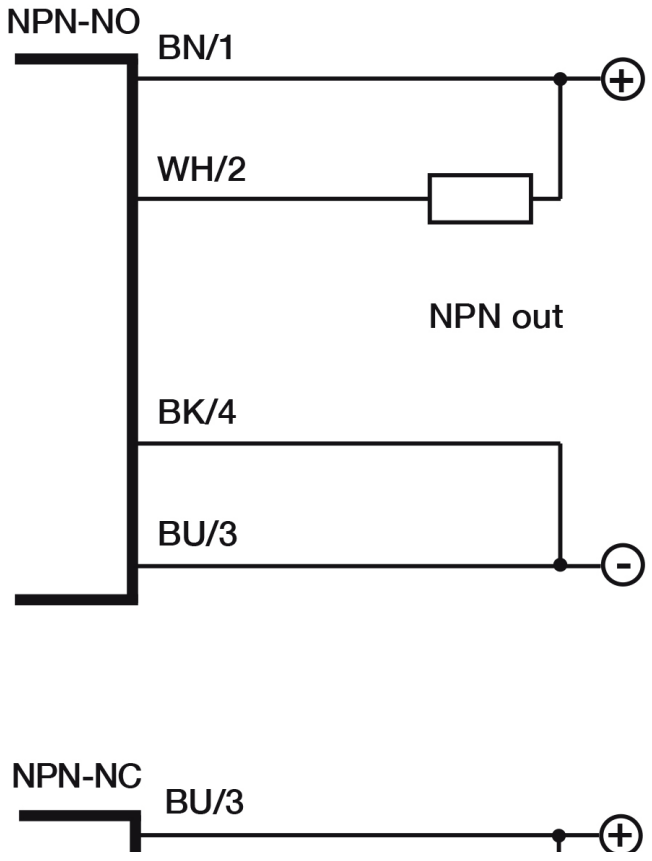

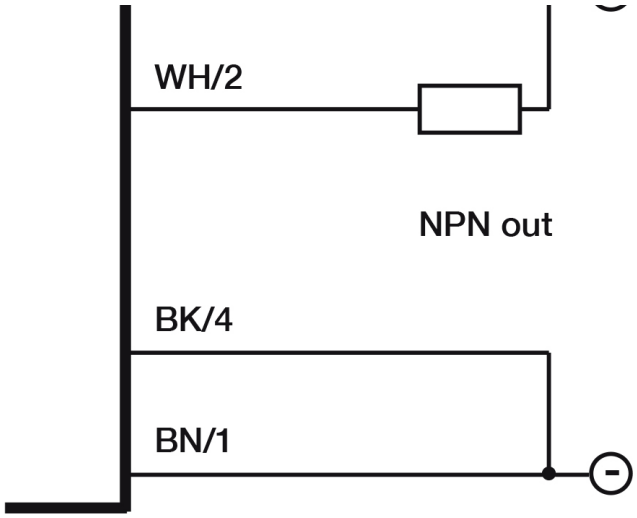
WH/2
NPN out
BK/4
BN/1

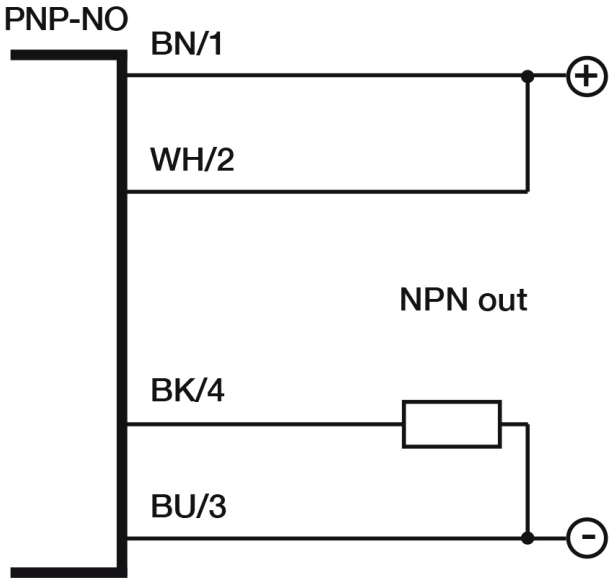
PNP-NO
BN/1
WH/2
NPN out
BK/4
BU/3

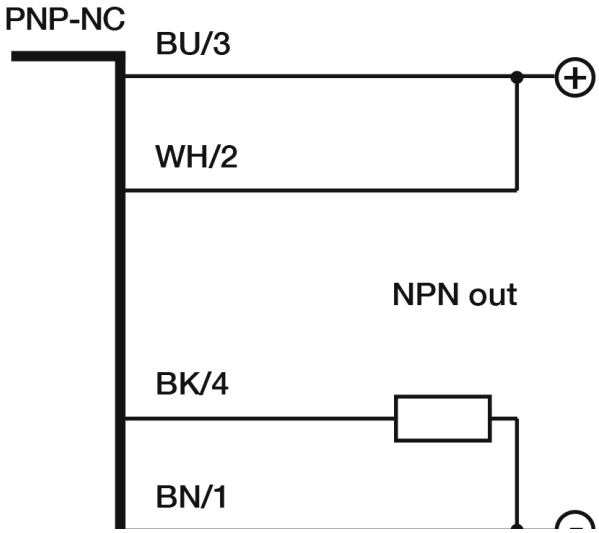
PNP-NC
BU/3
WH/2
NPN out
BK/4
BN/1

Connector

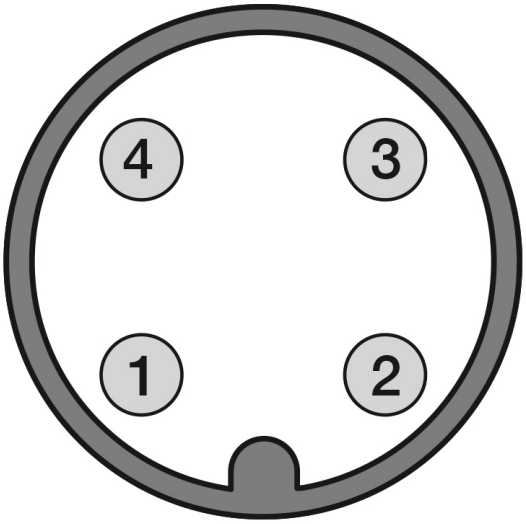

OTHERS

Dimensions

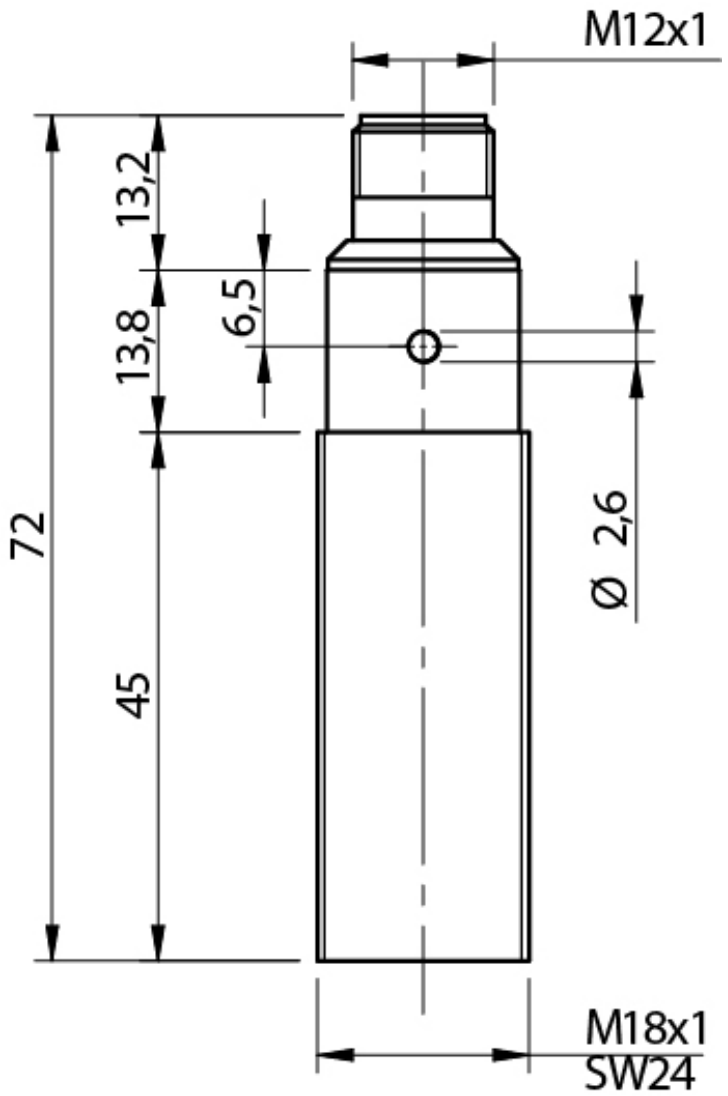

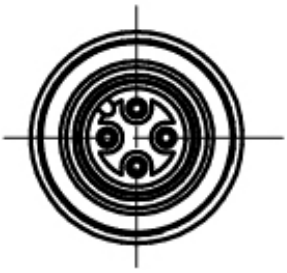

Response curves

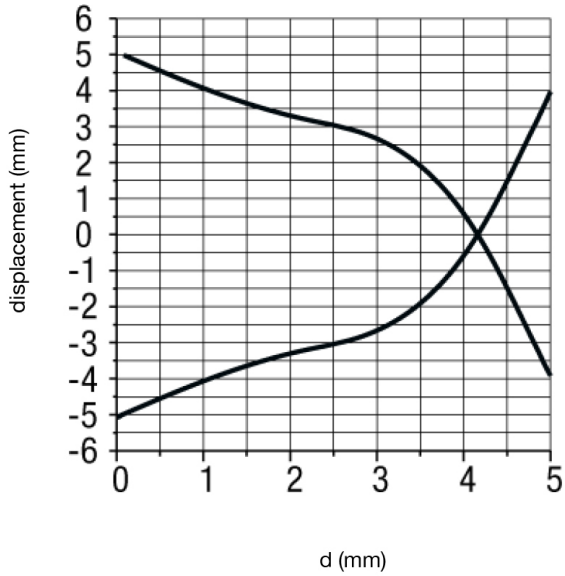

Installation

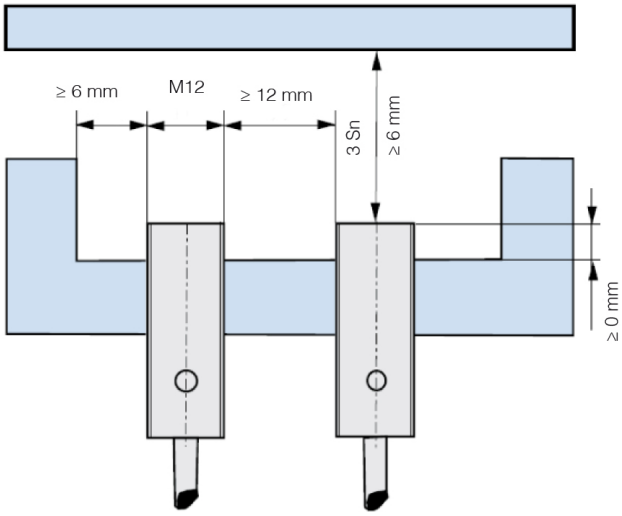

Datasensing S.r.l.
Strada S.Caterina, 235
41122 Modena (MO)
Tel. 059 420411
Fax 059 253973
E-mail
info@datasensing.com

date of printing
25/10/2026
03:32:58